NOVEMBER 07

WORKSHOP TECH SERVICES 08

SCOTT

INDEX WORKSHOP 08

1 > Gambler
2 > Gambler tool set
3 > LTD bikes
4 > Carbon fibres on Scott bikes
5 > Scott short names
6 > Spark
7 > Nude TC MY 08
8 > Nude TC Trouble Shooting
9 > Scale
10 > Ransom
11 > Aspect/Aspect FX
12 > Scott Shox service 08
13 > Voltage
14 > Contessa/Contessa FX
15 > Addict
16 > CR 1
17 > Speedster
18 > Plasma
19 > Contessa Race
20 > SUB
21 > Sportster
22 > CX
23 > Kids Bikes
24 > Carbon fibre warranty info – Burning analysis
25 > New BB carbon fibre lay-up on Addict, CR1, Spark and Scale
26 > Warranty claims of bikes of model year 2003 or older
27 > Agreement with suppliers about direct warranty support to dealers/national Scott distributors
28 > Replaceable drop outs since 1995
29 > Replacement parts
30 > Technical data/geometries
31 > Scott helmets
32 > Scott softgoods
33 > Scott bike shoes
34 > Scott tech accessories

GAMBLER

1

In 2008 we offer a new FR and DH bike in the line up of Scott Bike.

This frame can be used in 2 different ways as a Freeride bike or a pure DH Race bike.

Gambler concept

Gambler is the result of 2 years of research and development searching for one of the most versatile and durable FR and DH bikes available on the market, but still easy in set-up and maintenance.

Scott's focus was on a durable frame with an optimized kinematics of the rear swingarm.

Gambler was designed for riders looking for a dual suspended FR bike or a race oriented DH bike offering rear wheel travel between 190 and 230 mm.

Scott does not see frame, rear shock and kinematics as single components which are assembled together on a bike, but as a concept with all these components working together and offering an outrageous function by matching perfectly.

The Gambler Concept is based on a new designed multi-pivot technology.
In combination with the linear coil-over shock characteristics the kinematics guarantees a progressive suspension, adapted to smooth riding (beginning of travel) as well as extreme jumps (end of travel).

GAMBLER DH 10

GAMBLER FR 10

GEOMETRY/TECHNICAL DATA GAMBLER FR

Size	Headangle	HT Length	TT Horizon	Seatangle	Top ST	CST Length	BB OS
short	66	115	(565)	(72)	418	430	25
long	66	115	(590)	(72)	418	430	25

GEOMETRY/TECHNICAL DATA GAMBLER DH

Size	Headangle	HT Length	TT Horizon	Seatangle	Top ST	CST Length	BB OS
short	64	115	(565)	(72)	418	430	25
long	64	115	(590)	(72)	418	430	25

Travel	190/210/230 mm
Suspension Ratio	2.5/2.75/3.0
Piston stroke	76 mm
Shock length (Eye to Eye)	241mm
Hardware Mainframe	22.2 mm x 8 mm
Hardware Swingarm	40mm x 8 mm
Seatpost Diameter	34.9 mm
Headset	1 1/8“ or 1.5” depending on headtube insert
Fork travel	180-200 mm
Fork length	568 mm
BB housing	83 mm
Chainguide system	ISCG/ISCG05 tab
Rear Hub Width	150 mm
	2 x 61901 (24x12xT6)
Bearings	6 x 61902 (28x15xT7)

ADJUSTMENT OF HEAD ANGLE

On Gambler you can adjust the headangle within a few minutes for a better handling depending on your riding style and track condition/style.

How to adjust the headangle:
you need

- a 4 mm Allen key bit for a tigherning torque key
- a 56 mm wrench (attached to this bike)

1. loosen the three screws on the head of the headtubr with a 4mm allen key but do not remove them completely. These screws hold the insert in Place. Please note that it is not necessary to disassemble the fork or any other components.
2. Turn the insert with the 56mm wrench which is attached to your bike/frameset. The slot of the insert should always be in line with the slot of the headtube clamp. The resulting angle is engraved in the insert for both options.

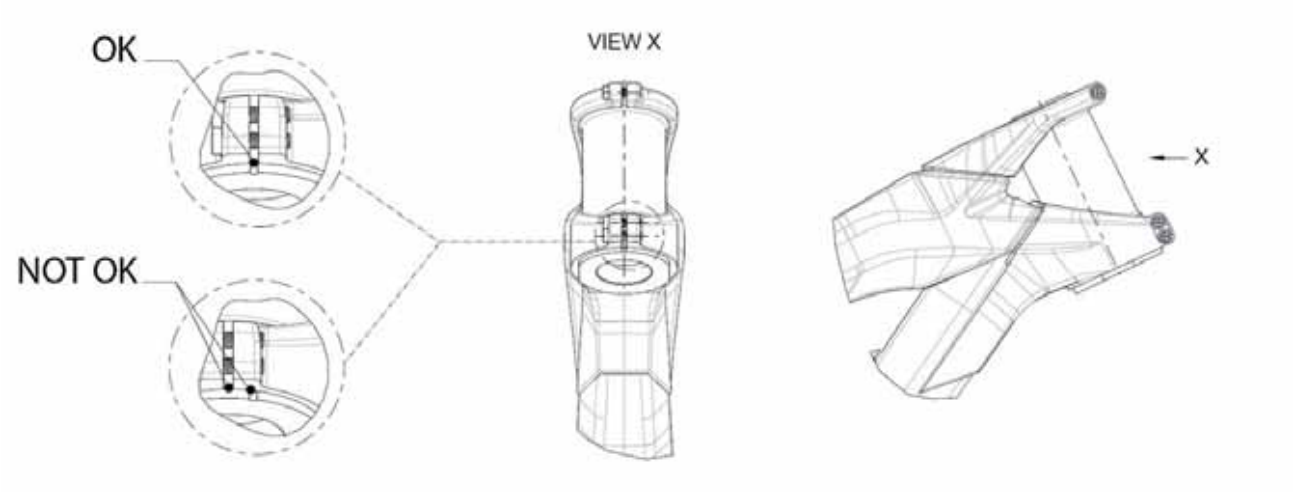

3. IMPORTANT: Please make sure that there is no gap between the collar on the downside of the insert and the headtube clamp on the frame.

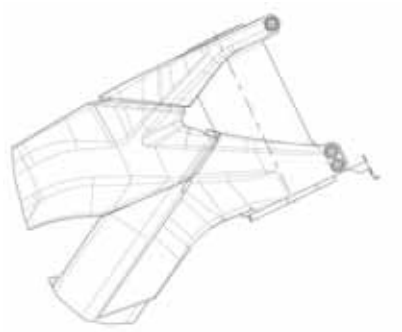

4. tighten the 3 screws with 5Nm/44in-lbs

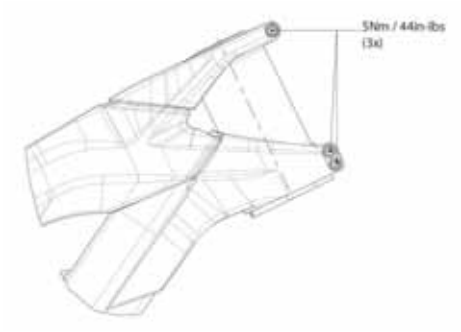

2 DIFFERENT HEADTUBE INSERTS

On Gambler you have 2 options for the headset diameter (1 1/8” and 1.5”).

You can order the headtube inserts via your local Scott dealer with:

210127	HEADTUBE INSERT GAMBLER 1 1/8 1size
210128	HEADTUBE INSERT GAMBLER 1.5 1size

For removing/assemblying them please contact your local Scott dealer as you might need some special tools for the headset dis-/assembly as well as a tightening torque key to fix the inserts in the headtube section.

It is very important to follow the tightening torque indications shown on the parts.

3 DIFFERENT REAR TRAVEL OPTIONS

On Gambler you have 3 options for the rear travel as shown on the drawing below:

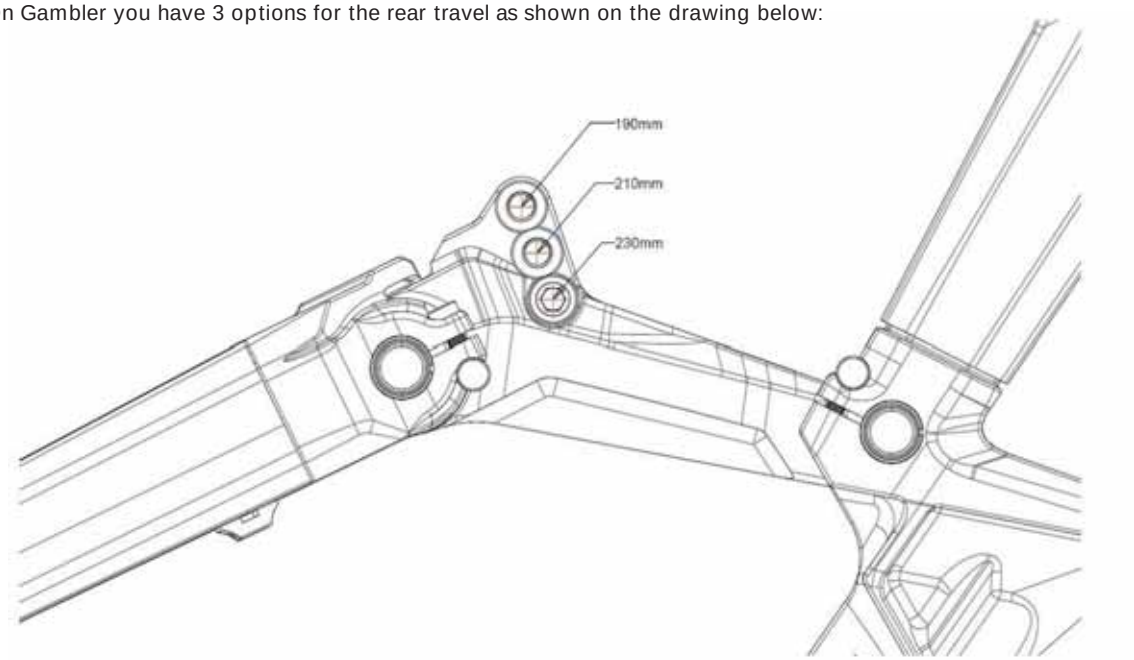

RECOMMENDED TOOLS FOR THE SET-UP

Please read this manual and the manual of the rear shock manufacturer carefully before you start the set-up procedure.

In addition we strongly recommend using a tightening torque key with a 6mm allen key insert.

To simplify the check of the SAG (= negative travel) of the rear shock please use the “SAG-Boy” printed as a color-beam on the cover of this manual.

SET-UP GAMBLER

The Set-Up of the rear shock can be easy done within a few minutes.

Please take this time to avoid dangerous riding performance and to get the best out of your Gambler.

Please make sure that the coil spring on the shock matches to your riding weight (including your riding gear).

We recommend following coil springs:

WEIGHT kg	TRAVEL 190 mm	210 mm	230 mm
50-60	250x3.25	300x3.25	350x3.25
60-70	300x3.25	350x3.25	400x3.25
70-80	350x3.25	400x3.25	450x3.25
80-90	400x3.25	450x3.25	500x3.25

For fine tuning the SAG and the corresponding eye-to-eye distance of the shock bolts you can tighten or release the pretension of the coil spring but please respect the maximum and minimum spring indications of the shock manufacturer.

The eye-to-eye distance between the shock bolts should be in basic set up 212mm (40% SAG).

This length is also indicated on the cover of this manual by the colored beam of the SAG-Boy.

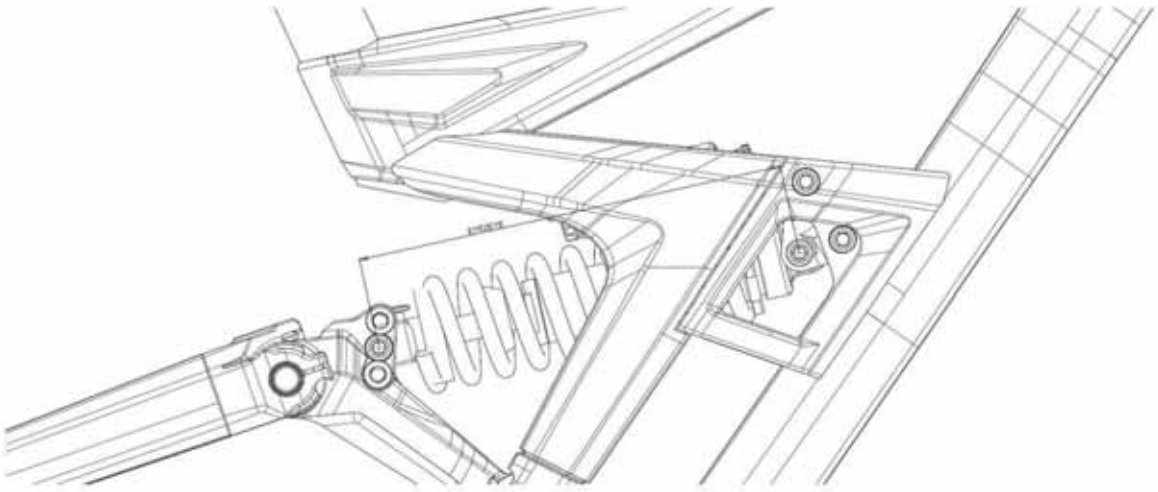

For further details on the shock set-up please follow the indications of the rear shock manufacturer attached to this bike.

BASIC SET-UP OF REBOUND

«Rebound» describes the speed the shock comes back to its original length after absorbing an obstacle.

By using the red rebound screw you can adjust the rebound step by step.

Please refer to the following instruction:

Ride your bike off a pavement (remain in the saddle) and check how many times it bounces.

- if it bounces 1-2 times, the set up is good.
- If it bounces more than 3 times the rebound is too fast. Turn the screw 1-2 “clicks” clockwise
- If it does not bounce the rebound is too slow. Turn the screw 1-2 “clicks” counter clockwise.

IMPORTANT

Note that you have to mount the rear shock always as shown underneath.
Mounting the rear shock in a different position can cause severe damages to the frame, the linkage levers and the rear shock.

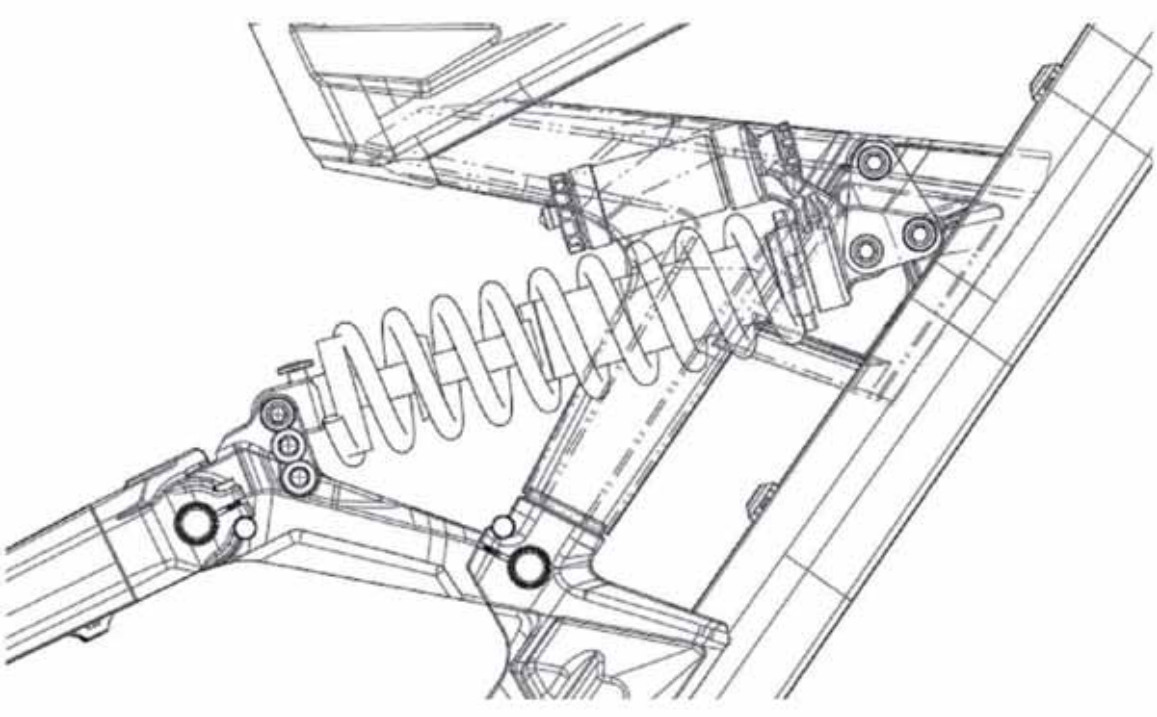

IMPORTANT

After a dismantlement of the rear shock, both fixing bolts should be tightened with a tightening torque of 35Nm/308in-lbs.
If this is not done correctly the rear shock can be damaged.

SET-UP OF OTHER SHOCK MODELS

Scott strongly recommends using only the originally specified shock with the Gambler bike, as we have chosen carefully both parts for a perfect matching combination.

If you want to use a different rear shock model than the one originally on the bike, please make sure that the shock will not in any position hit the frame and cause a damage to the frame.

Please follow the instruction below:

- please make sure that the rear shock or its accessory parts do not touch the frame when mounting or suspending
- for doing so release the air/remove the coil, install the shock and compress the shock completely
- if the shock touches the frame while doing so, do not use this shock in order to avoid damage to frame, swingarm or shock

ADJUSTMENT OF SEATPOST-HEIGHT

IMPORTANT

The seatpost has to be inserted into the seattube at a minimum of 80mm.

Never use another seatpost diameter than 34.9mm or try to use a shim/reducer between seatpost and frame.

When lowering down the seatpost, please make sure that it will not hit the shock below while riding! This could result in serious damage on bike parts and result in a dangerous riding condition.

IDS DROP OUT SYSTEM

The Gambler offers the possibility not only to change drop out hanger in case of damage, you also can choose between different 3 different drop outs of the Scott IDS (Interchangeable Drop-Out System):

Inline you will find on Gambler FR following drop out

200521

Additional in small parts box of Gambler DH 10 you will find following drop out
(10 mm longer as FR drop out)

210004

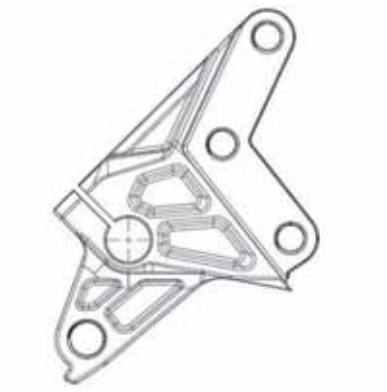

Another Option is for SRAM-Maxle System for 12 mm/150 mm through axle hubs (same length as your FR dropout), available with Scott article number 206796 with 135 mm Maxle axle at your local authorized Scott dealer. The 150 mm Maxle axle can be ordered via SRAM distribution network

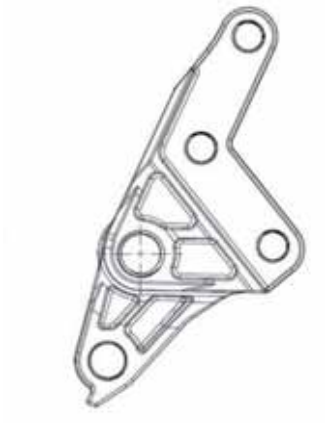

FRONT FORK SET-UP/CHANGE OF FRONT FORK

For the set up of the front fork please use the fork specific manual attached to the bike.

We recommend using front forks with a travel between 180 and 200 mm (568mm fork length), as this will not influence the geometry and alter handling of the bike.

Additional Parts specific for Gambler

210042	FR.TRIANGLE GAMBLER DH 10 08 short	PCE	2008
210042	FR.TRIANGLE GAMBLER DH 10 08 long	PCE	2008
210043	SEATST.GAMBLER DH 10 08 1size	PCE	2008
210044	CHAINST.GAMBLER DH 10 08 1size	PCE	2008
210045	FR.TRIANGLE GAMBLER DH 20 08 short	PCE	2008
210045	FR.TRIANGLE GAMBLER DH 20 08 long	PCE	2008
210046	SEATST.GAMBLER DH 20 08 1size	PCE	2008
210047	CHAINST.GAMBLER DH 20 08 1size	PCE	2008
210048	FR.TRIANGLE GAMBLER FR 10 08 short	PCE	2008
210048	FR.TRIANGLE GAMBLER FR 10 08 long	PCE	2008
210049	SEATST.GAMBLER FR 10 08 1size	PCE	2008
210050	CHAINST.GAMBLER FR 10 08 1size	PCE	2008
210051	FR.TRIANGLE GAMBLER FR 20 08 short	PCE	2008
210051	FR.TRIANGLE GAMBLER FR 20 08 long	PCE	2008
210052	SEATST.GAMBLER FR 20 08 1size	PCE	2008
210053	CHAINST.GAMBLER FR 20 08 1size	PCE	2008
210054	LINKAGE BAR GAMBLER 08 1size	PCE	2008
210119	SEATPOST GAMBLER Zero Offset 349	PCE	2008
210121	TOOL- Swingarm GAMBLER 1size	PCE	2008
210126	SWINGARM-Rep.Set GAMBLER 1size	PCE	2008
210127	HEADTUBE INSERT GAMBLER 1 1/8 1size	PCE	2008
210128	HEADTUBE INSERT GAMBLER 1.5 1size	PCE	2008
210100	CHAINGUIDE E-13 LG1 ISCG05 1size	PCE	2008
210101	CHAINGUIDE MRP SB-3 ISCG 1size	PCE	2008
210117	SEATCLAMP GAMBLER 1size	PCE	2008
210105	RIM ALEX Supra BH 32H blk black	PCE	2008

GAMBLER TOOL SET

2

To repair or replace the bearings of the pivot points of Gambler we offer following articles:

210121	TOOL- Swingarm GAMBLER 1size
210126	SWINGARM-Rep.Set GAMBLER 1size

The tool set will contain, beside all tools in stainless steel quality, a CD showing all steps of the bearing disassembly and assembly as well as all needed technical data as e.g. tightening torques etc.

The Swingarm Rep Set will contain beside the bearings all nuts and bolts to replace all moving parts or parts of wear and tear of a Gambler bike.

Pls have a look at following pics giving you an overview about all needed steps.

The bearings are standard size and can also be ordered in local hardware stores, in case customers do not want to replace all parts.

One frame needs following bearings:

2 x 61901 (24x12xT6)
6 x 61902 (28x15xT7)

PART NAME	QTY.	PICTURE
S1	1	
S2	1	
S3	1	
S4	1	
S5	1	
S6	1	
S7	1	
S8	1	M8
S9	1	

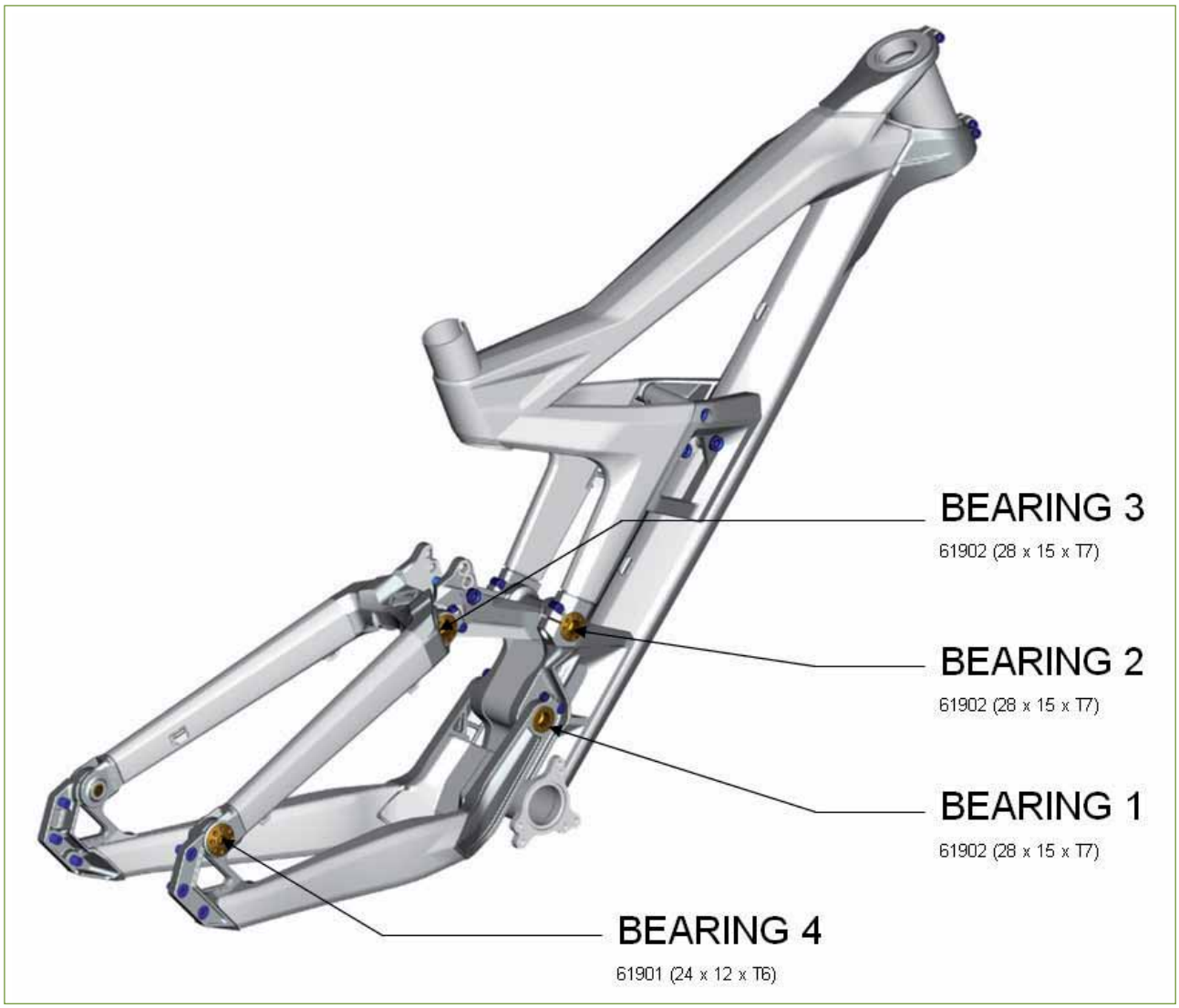

BEARING 1 / TAKE OFF (1)

a)

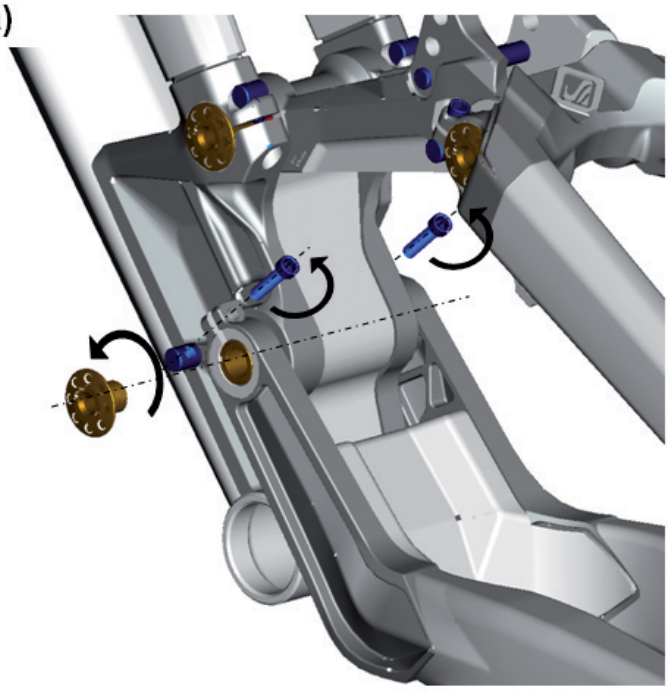

b)

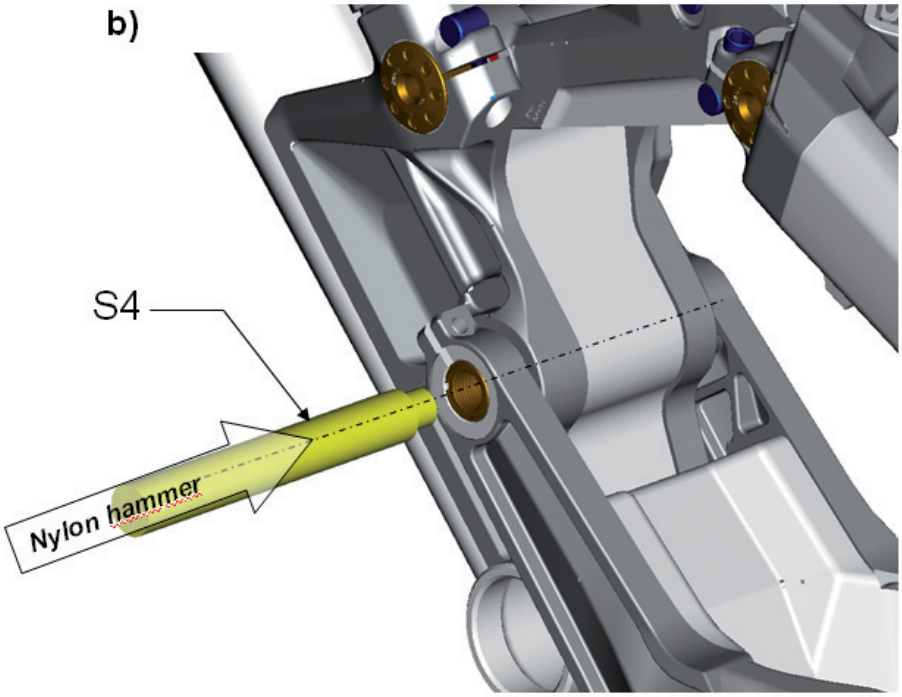

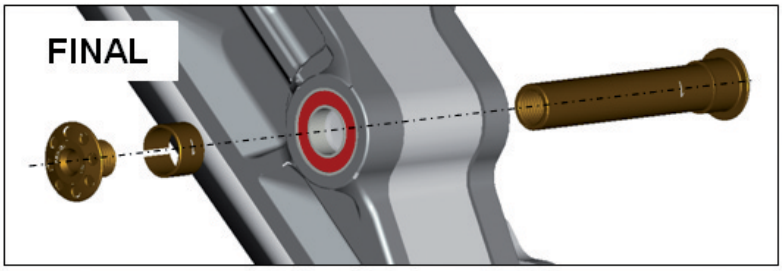

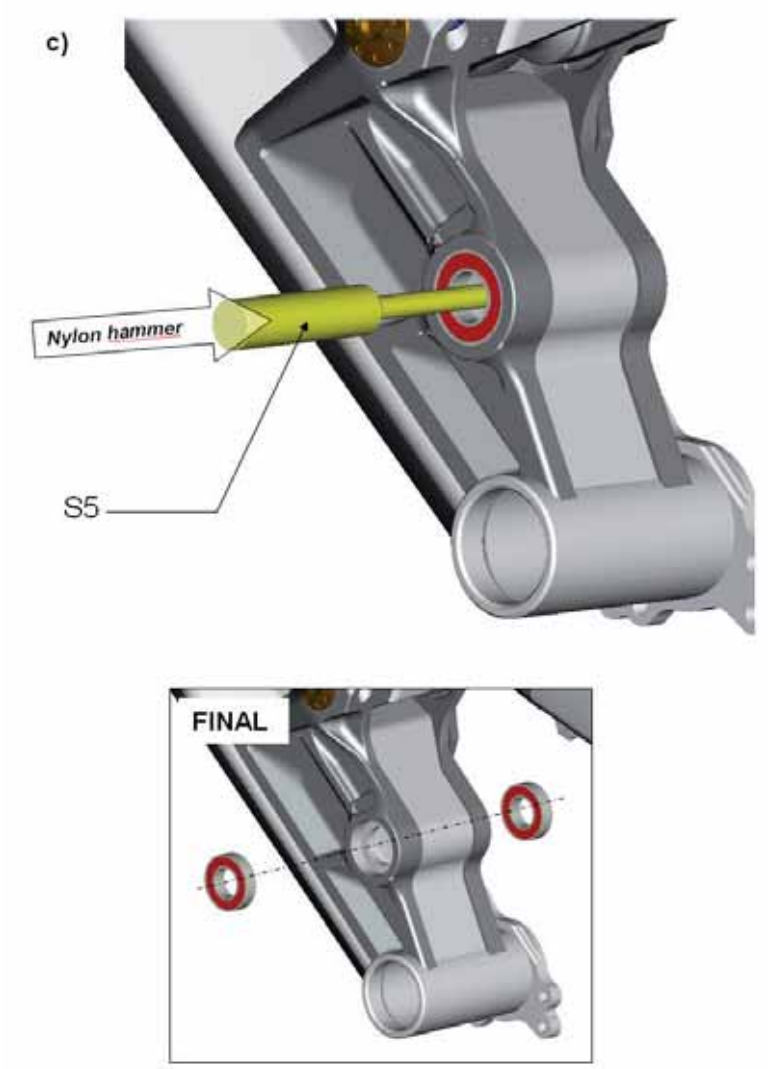
c)
Nylon hammer
S5
FINAL

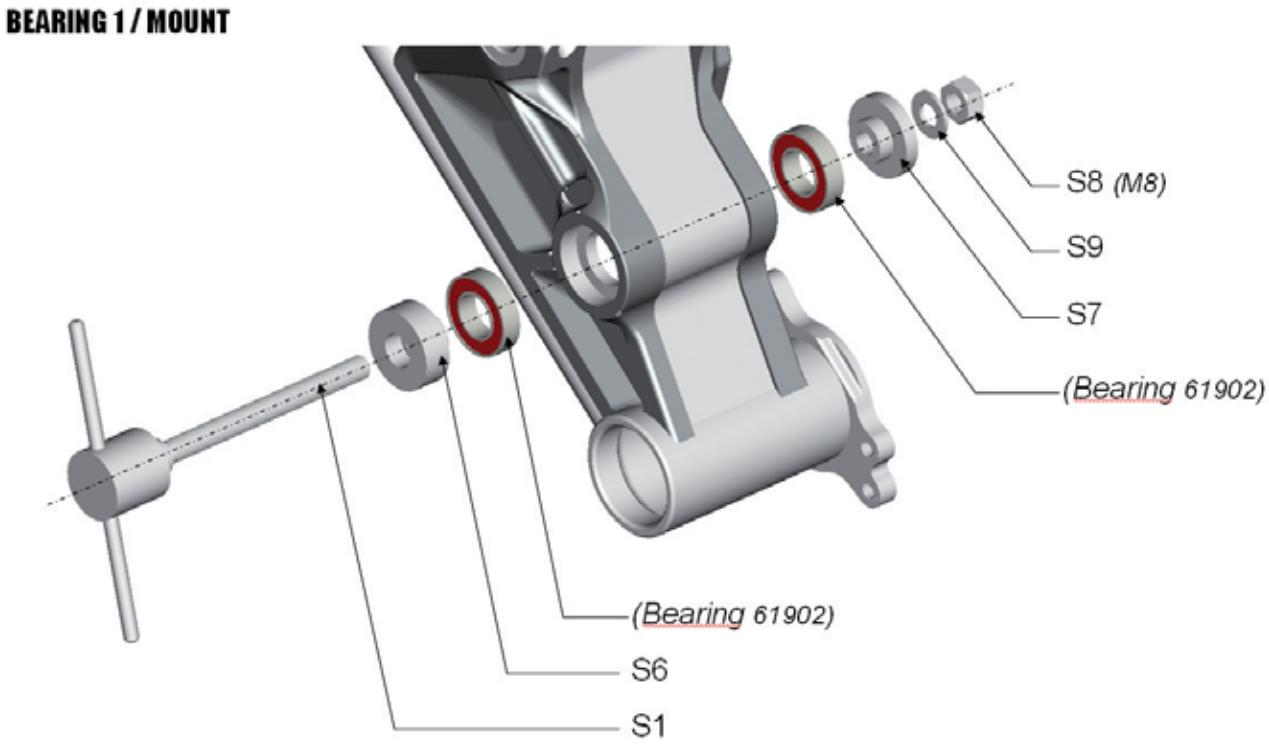
BEARING 1 / MOUNT
S8 (M8)
S9
S7
(Bearing 61902)
(Bearing 61902)
S6
S1

BEARING 2 & 3 / TAKE OFF (1)

a)

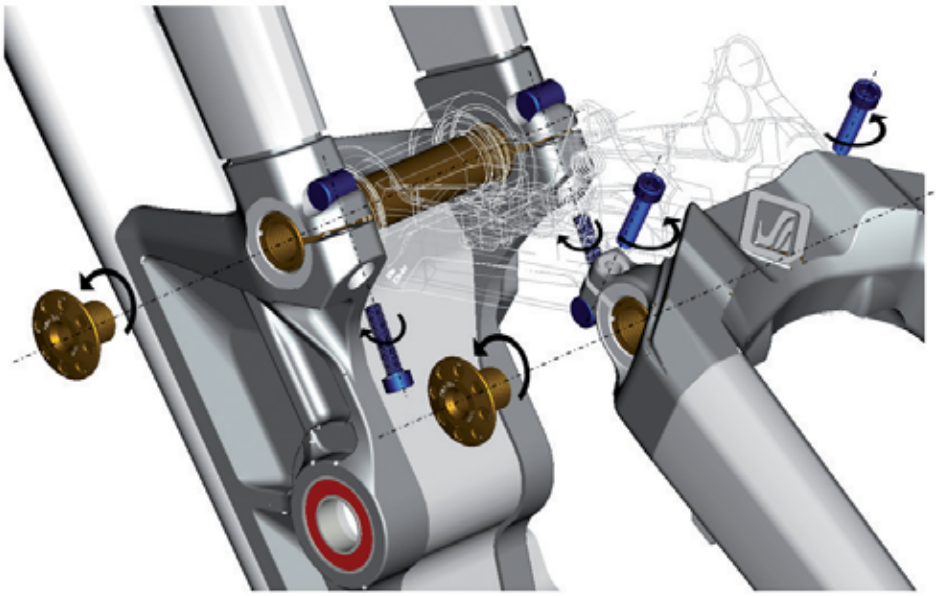

b)

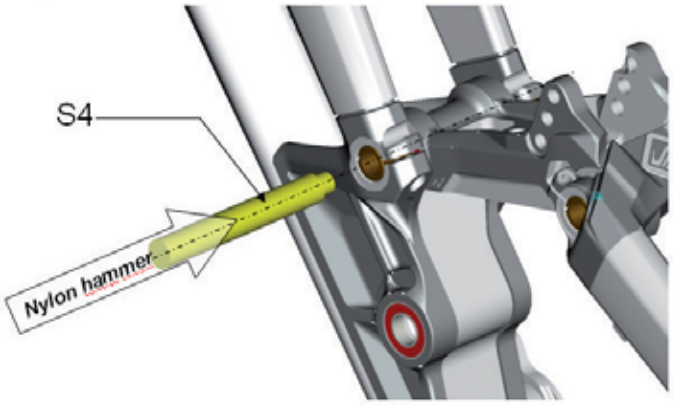

c)

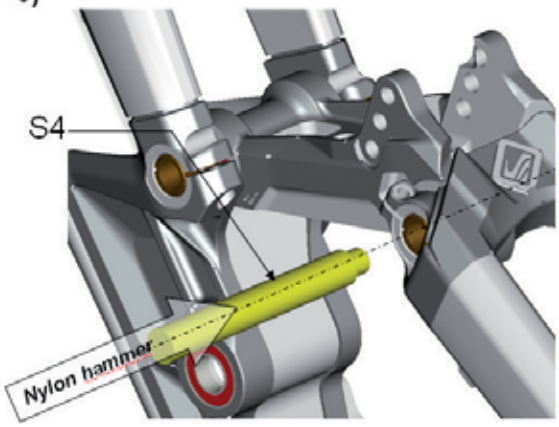

d)

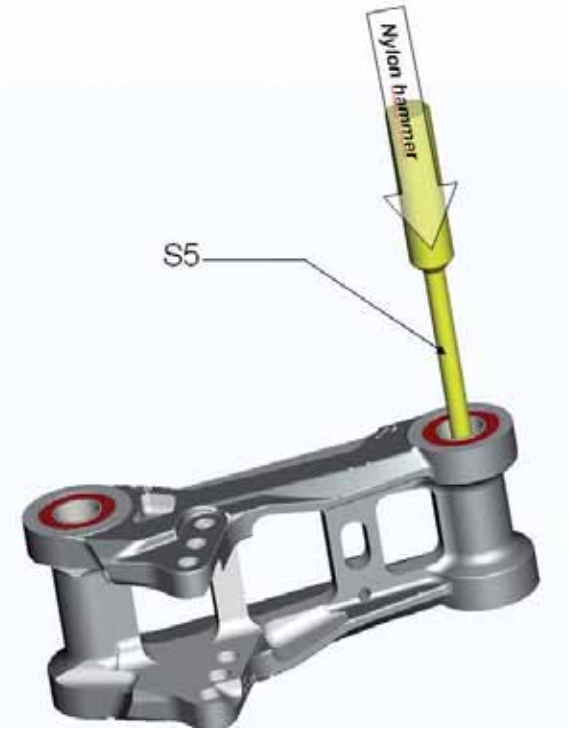

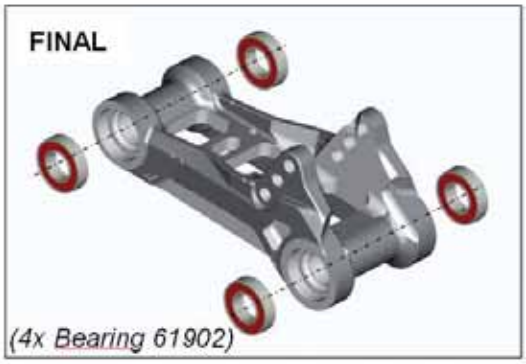

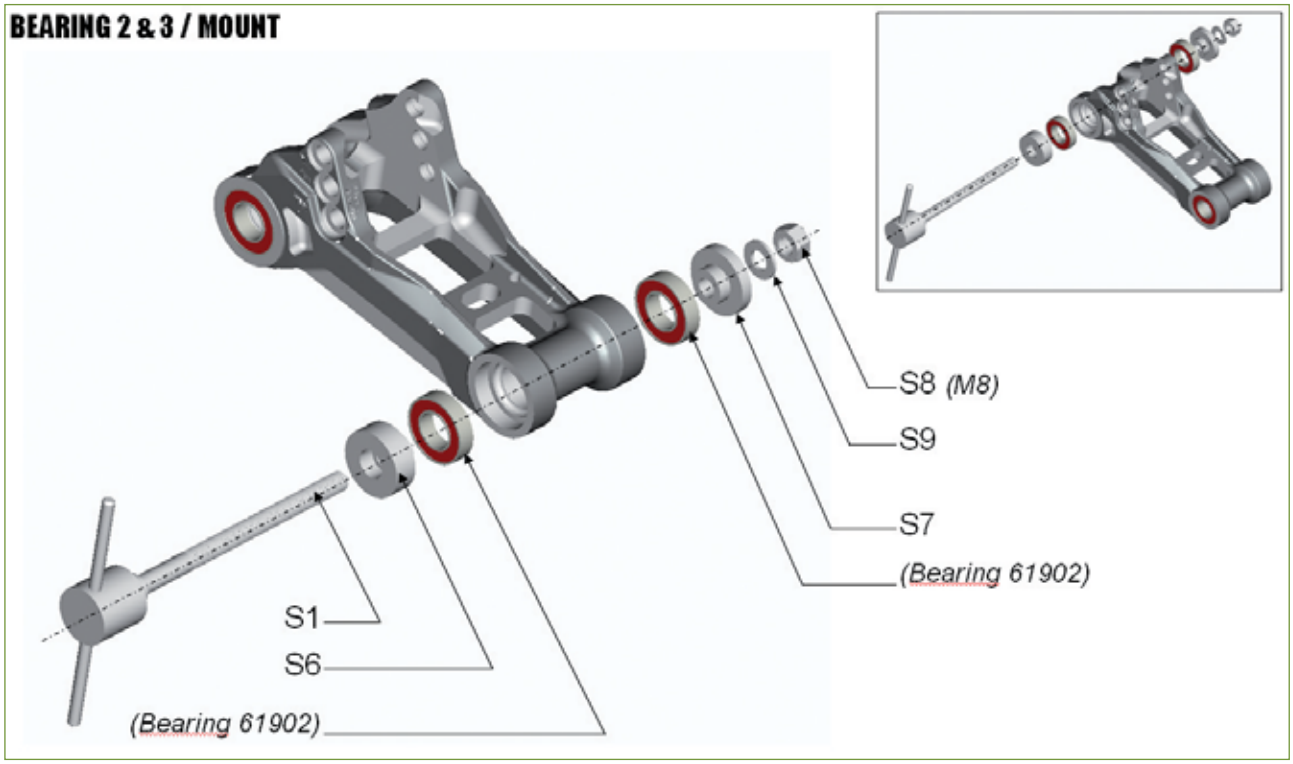
BEARING 2 & 3 / MOUNT
S8 (M8)
S9
S7
(Bearing 61902)
S1
S6
(Bearing 61902)

BEARING 4 / TAKE OFF

a)

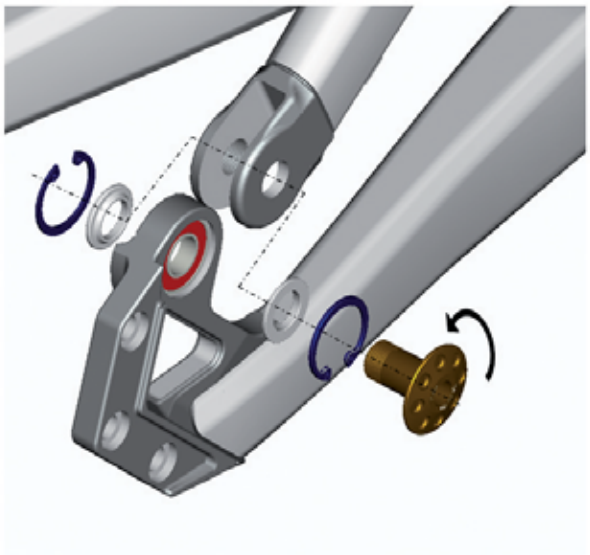

b)

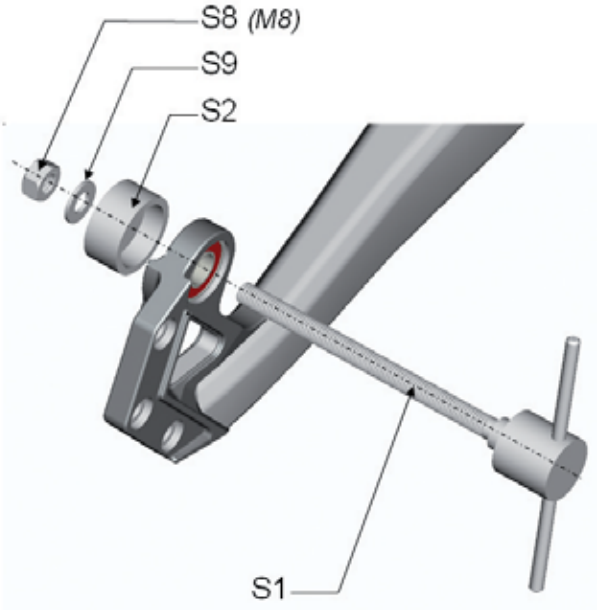

BEARING 4 / MOUNT

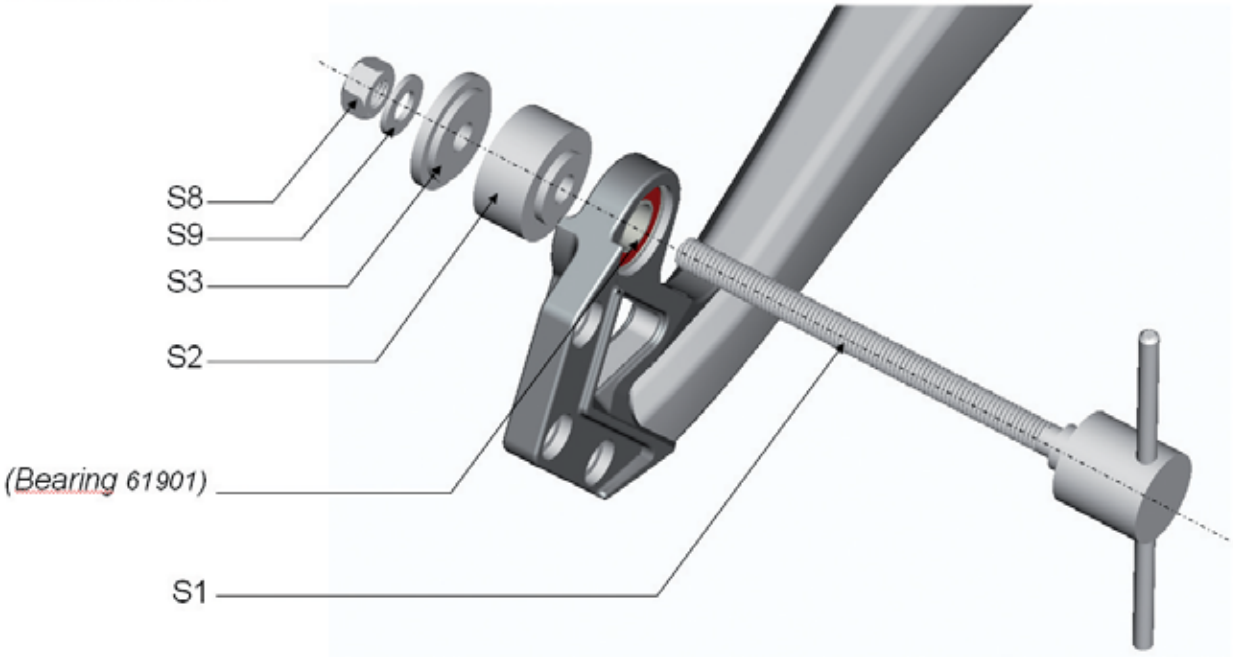

3

The frames of LTD Bikes on MY 08 are not available as frame sets for retail sales as it is our goal to keep those bikes really limited and not as a sales article made by frame sets.

For Spark ad Ransom you will find each frame part (front triangle, seatstay, chainstay) in the list in the chapter below showing tall spare parts article numbers.

For Scale and Addict we have a certain quantity blocked on Scott warranty account to serve in case a customer has a warranty problem on his MY 08 Scale or Addict LTD bike.
In case you need such a frame, pls contact Patrick Bochud or Holger Klinter for unblocking such a frame in our warehouse for you.

210039	FRAMESET SCALE LTD 08 S	PCE	2008
210039	FRAMESET SCALE LTD 08 M	PCE	2008
210039	FRAMESET SCALE LTD 08 L	PCE	2008
210039	FRAMESET SCALE LTD 08 XL	PCE	2008
210041	FRAMESET ADDICT LTD 08 XS	PCE	2008
210041	FRAMESET ADDICT LTD 08 S	PCE	2008
210041	FRAMESET ADDICT LTD 08 M	PCE	2008
210041	FRAMESET ADDICT LTD 08 L	PCE	2008
210041	FRAMESET ADDICT LTD 08 XL	PCE	2008
210041	FRAMESET ADDICT LTD 08 2XL	PCE	2008

For Scale LTD (MY 05-MY 07) and Addict LTD MY 07 we can offer frames with following article numbers for replacement:

205340	FRAME SCALE LTD D S	PCE	2007
205340	FRAME SCALE LTD D M	PCE	2007
205340	FRAME SCALE LTD D L	PCE	2007
205340	FRAME SCALE LTD D XL	PCE	2007
205341	FRAME SCALE LTD V S	PCE	2007
205341	FRAME SCALE LTD V M	PCE	2007
205341	FRAME SCALE LTD V L	PCE	2007
205341	FRAME SCALE LTD V XL	PCE	2007
205348	FRAME SET ADDICT LTD std BB XS49	PCE	2007
205348	FRAME SET ADDICT LTD std BB S52	PCE	2007
205348	FRAME SET ADDICT LTD std BB M54	PCE	2007
205348	FRAME SET ADDICT LTD std BB L56	PCE	2007
205348	FRAME SET ADDICT LTD std BB XL58	PCE	2007
205348	FRAME SET ADDICT LTD std BB 2XL61	PCE	2007

Those frames will be also blocked at Scott account but will be released by Patrick Bochud/Holger Klinter for warranties claims.

In addition we can offer you a set of the red anodized screws that can be found on Scale and Spark LTD:

210129	SCREW SET SPARK/SCALE LTD red	PCE	2008

CARBON FIBRES ON SCOTT BIKES

4

HMX NET

High Modular X NET

At the moment the High-Modular-X NET fibre is the best high end fibre on the market. The fibre is also used in the aircraft industry and is available only in limited quantities. You'll find this fibre on our models Spark, LTD and 10, Scale and Ransom LTD as well as on Addict LTD, R1, R2 and R3. You can see the surface through a shimmery carbon structure of very fine fibres.

Naked External Tubing: to cut off even the last not really needed grams Scott eliminated the classical X-shaped carbon woven top layer which normally is only for cosmetic reason.

HMX

High Modular X

This fibre is identical to the HMX NET but the outer layer consists of weave like fibre mats. They are composed of 12K fibres (12mm width) and show the composite look clearly. This fibre is used on our Scale 10 and Ransom 10.

HMF NET

High Modulus Fibres NET

We have been using the highly approved High Modular NET fibre for a long time. The models Spark 15, 20, 30 and the Addict R4 feature this fibre. A difference to the HMX NET fibre is not apparent.

Naked External Tubing: to cut off even the last not really needed grams Scott eliminated the classical X-shaped carbon woven top layer which normally is only for cosmetic reason.

HMF

High Modulus Fibres

This fibre is equal to the HMF NET fibre but the outer layer features a 12K composite structure. The models Scale 15, 20, 30 and Ransom 20 and the whole CR1 road- and Genius MC Series feature this composite look.

SCOTT SHORT NAMES

5

- IMP
  Integrated (Carbon) Molding Process: Toptube, headtube and downtube are made in one piece for increased strength and stiffness while saving 11% of material of a conventional CR1 design headtube
- CR1
  Frames made in tube-to-tube process. Scott's wellknown technique to bond tubes to each other without lugs

- NET
  Naked External Tubeset: no cosmetic layers on top of the surface to reduce weight

- SLS Kinematics
  Scott Linkage System: maximizes pedalling efficiency for any travel/geometry and gear selection

- ILS Kinematics
  Intelligent Linkage System: features a virtual pivot point which offers automatically the optimal pivot position.

- SDS
  Shock Damping System: frames/tubes made laterally stiff but still vertical flexible to absorb small shocks from the ground by a 3-D lay-up system

- SCDS
  Scott Carbon Dropout System: dropouts made completely from carbon, lighter, more durable and stronger than dropouts made from alloy

- IDS
  Interchangeable Dropout System: dropouts we use on Voltage, Gambler, Ransom, Nitrous and High Octane in 4 different options for perfect stiffness and shifting performance

- V-drop out
  3D forged dropout on Scale alloy frames for highest stiffness combined with minimum weight

- Evo Drop out
  Forged dropout used on Sportster and SUB with integrated fixations for fender, carrier and Kickstand & disc brake (on left side)

- BOX chainstay bridge
  Hollow and lightweight bridge between the chainstays behind the BB housing on Scale alloy frames to increase stiffness at minimum weight adding

- ISCG
  International Standard Chain Guide was created as an industry standard to simplify the compatibility of chain guide parts with frames by offering commonly agreed mounting measurements for the fixation of chain guides on bike frames.

- ISCG 05 tabs
  International Standard Chain Guide 05 is an evolution of the ISCG and offers more adjustability and compatibility in assembly of chain guides on bike frames in comparison to the ISCG.
  For more details please visit http://www.iscg05.com/home.html

- Hydroformed tubing
  Tubes that are formed with high pressurized oil in a shape that will increase stiffness at same weight of regular (e.g. round) shaped tubing

- Octagon tubing
  Tubes made with 8 edges for increased stiffness on Voltage bikes

6

Spark MY 08 remains in most parts same as MY 07.

The main pivot got a new type of axle as shown below:

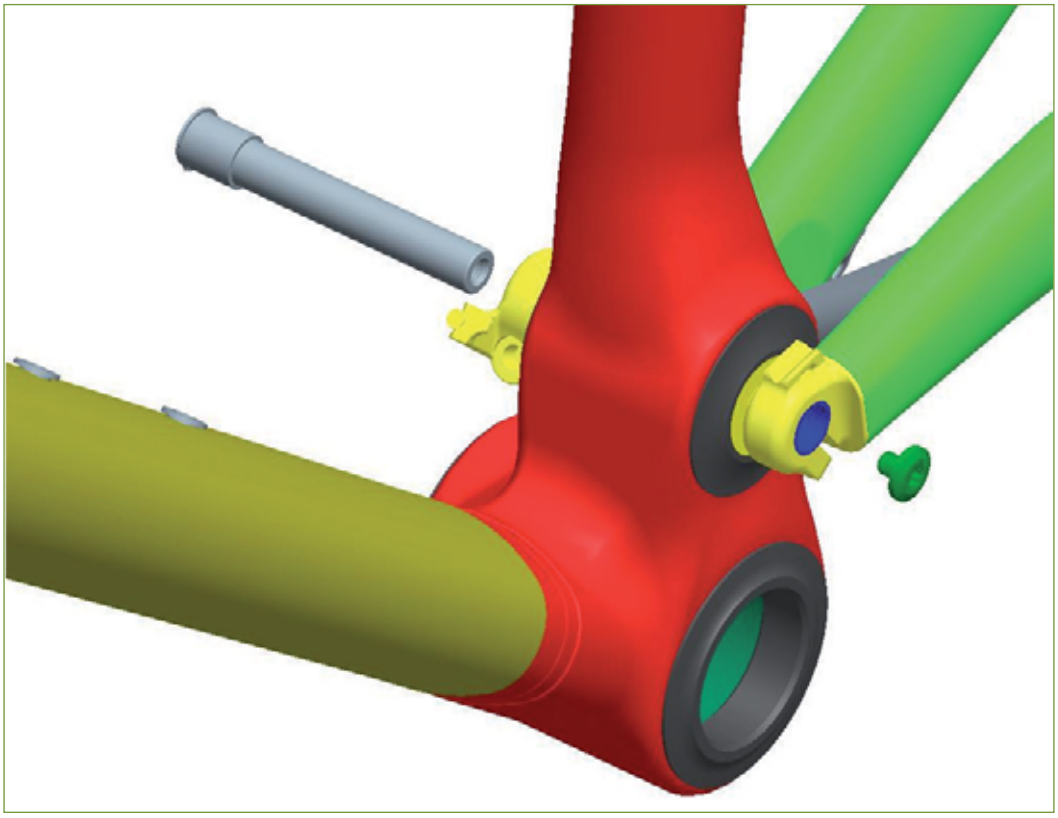

By this action we can solve problems with moving shims on the axle and resulting lateral movement of the chainstays.

In case of problems on bikes of MY 07 you can order those axles in our system.

210427	MAIN PIVOT AXLE SET SPARK 1size	PCE	2008

Special Parts

Please note that beside the 4 different sizes of the front triangle (S/M/L/XL) also the seatstays and linkage bars are specific for each frame size.

These parts are not interchangeable between the sizes!

206908	LINKAGE BAR SET SPARK 07 L
206908	LINKAGE BAR SET SPARK 07 M
206908	LINKAGE BAR SET SPARK 07 S
206908	LINKAGE BAR SET SPARK 07 XL

206951	CABLE FIXING SET SPARK one size
206935	SEATCLAMP SPARK STD one size
206936	SEATCLAMP SPARK LONG one size
206940	CUTTING TOOL SEATTUBE SPARK 382
206473	DROPOUT SPARK 2-PAK
206952	SEATSTAY PROTECTOR SPARK one size
206954	ANTICHAINSUCK DEVICE SPARK one size
208359	SEATCLAMP W QR SPARK 38.25

NUDE TC MY 08

7

On Nude TC we have some changes in MY 08 that you will find by running change as we did not want to stop or delay first productions of MY 08.

The cable fixation on the remote wheel on the shock body got a new design that makes the cable fixing more easy and efficient in case of first assembly and rework/maintenance.

Pls find on next pages “old” versus “new” remote wheel and the manual how to handle the assembly.

Please note that we will not rebuilt in our warehouse shox with “old” style to “new” style, therefore you might receive bikes of both versions during this season.

In addition some small evolutions on the shox were made on following points:

- rebound adjuster knob with smoother action by rework of internal shock parts
- air chamber volume increased to make a bigger difference between Traction Mode and Full Mode when bouncing the bike (shop feeling)

According to a discussion with DT Swiss, all shox given to them for regular annual maintenance or a warranty will get free of charge the new remote wheel on the shox as an upgrade.

Concerning the Tracloc lever Scott is working with DT on a new version, but this will not be available before MY 09 productions.

SET-UP OF THE TRAC-LOC REMOTE CONTROL OF NUDE TC SHOCK MK1

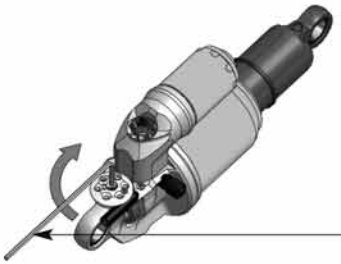

This is only for NUDE TC Shock MK1

3 turn clockwise up to the stop by using a 2mm Allen key

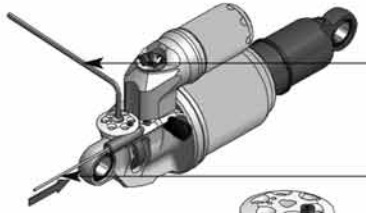

4 keep the Allen key kept in its end position and ...

thread in the cable ...

into this bore.

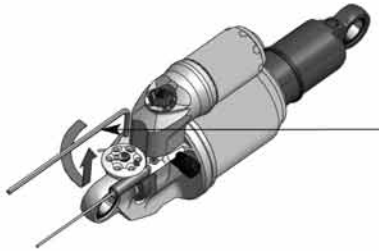

5 Release the Allen key gently counterclockwise and pull it off

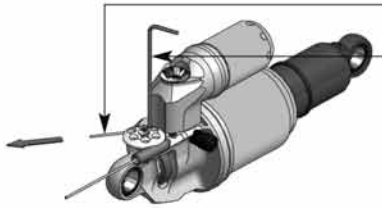

6 Pull the cable tight ...

then tighten the headless 3mm-screw by using a 1,5mm-Allen key. (max. 1.3 Nm)

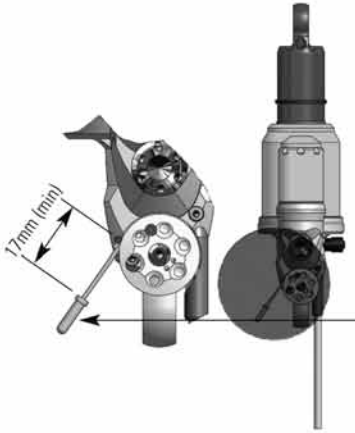

7 Put on the end cap and make sure to have at least 17mm of free cable length.

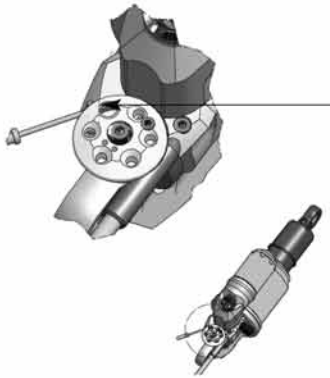

in Traction-Mode the 4mm bore aligns with the edge on the shock body

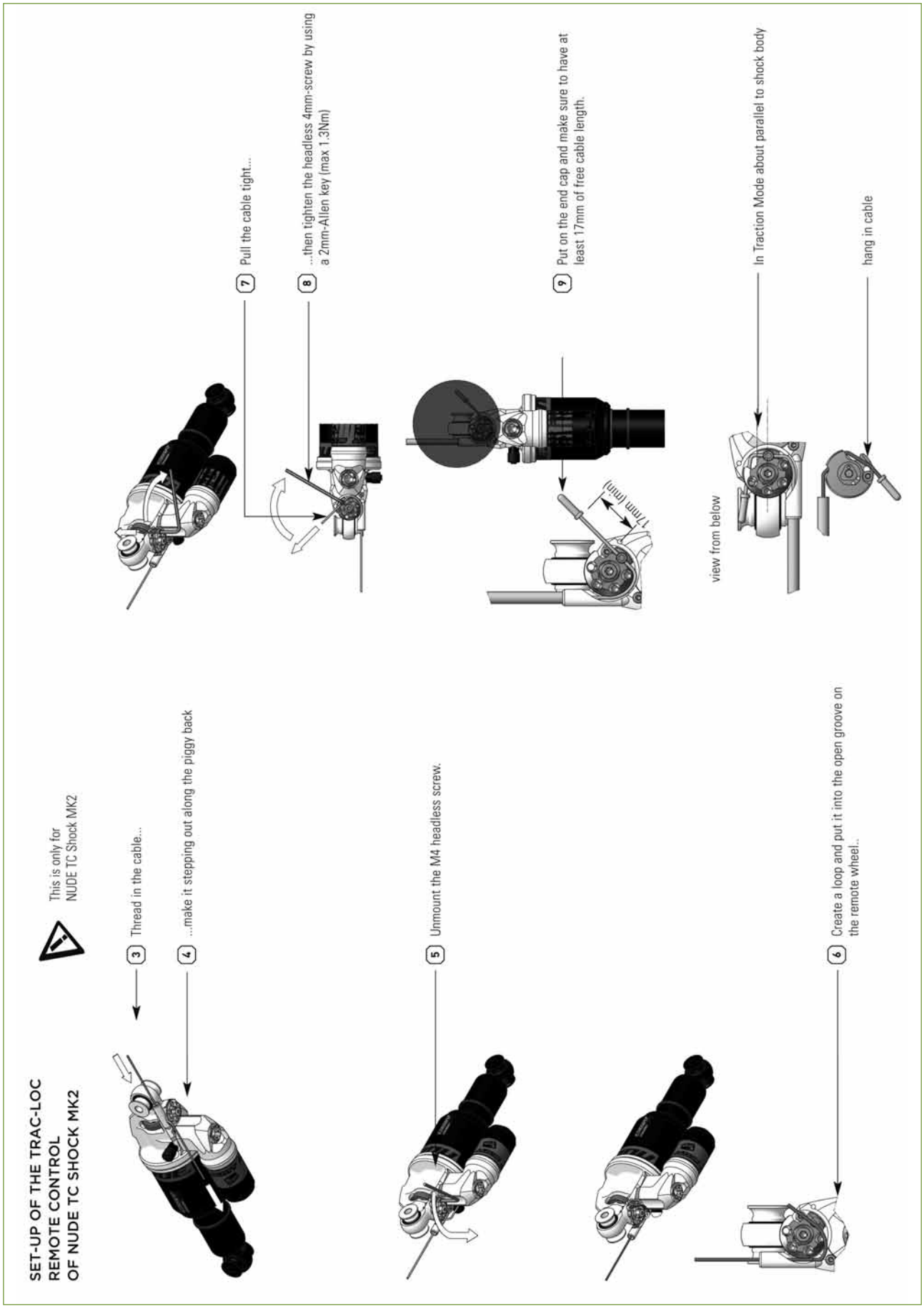
SET-UP OF THE TRAC-LOC
REMOTE CONTROL
OF NUDE TC SHOCK MK2
This is only for
NUDE TC Shock MK2
3 Thread in the cable...
4 ...make it stepping out along the piggy back
5 Unmount the M4 headless screw.
6 Create a loop and put it into the open groove on the remote wheel...
7 Pull the cable tight...
8 ...then tighten the headless 4mm-screw by using a 2mm-Allen key (max 1.3Nm)
9 Put on the end cap and make sure to have at least 17mm of free cable length.
17mm (min)
view from below
In Traction Mode about parallel to shock body
hang in cable

NUDE TC TROUBLE SHOOTING

8

In order to make some adjustments on the shox easier and enable you to do some “Trouble Shooting” by yourself in order to serve our/your customers more efficient please have a look at following information:

In case the remote wheel on the Nude TC shock will not move back in its original position by too high friction caused by water and dust, the remote-wheel assembly unit can be disassembled, cleaned, re-greased and re-assembled by following the steps as shown below:

Old barrel adjustment

Turn the barrel in clockwise.

Place the biggest barrel hole
on top off the thread stop
barrel screw.

Put the stop screw through the
barrel.

New barrel adjustment

Concerning the warranty procedure on Nude TC please refer to the info provided from DT Swiss.

SCALE

9

Scale LTD MY 08 got a new carbon fibre lay-up with HMX net fibres and a new seattube that is now integrated and works the same way as on Spark of MY 07.

To cut the seattube to the specific height of the customer please follow the instructions below:

SUPPLEMENT TO MANUAL A FOR SCOTT SCALE

In case your bike is equipped with an integrated seatpost pls follow the instructions below to cut the seattube to your personal length:

The seatpost of the Scott Scale needs to be cut and adjusted to the personal seat height of the rider.

The tool to do so is added to your Scale and will help to cut properly without any risk of damaging your seat tube.

To do so, pls follow the instructions given below:

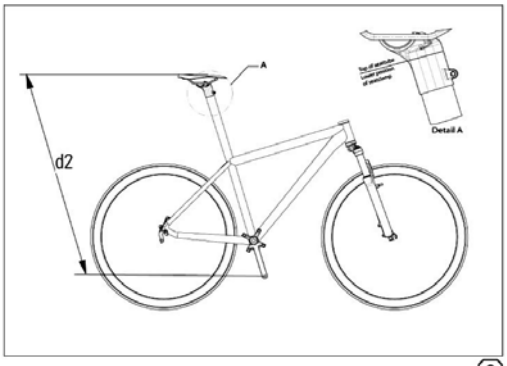

2

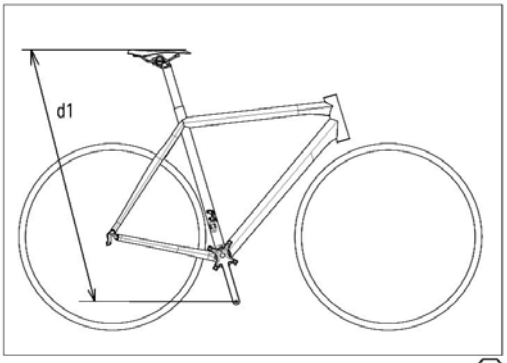

1

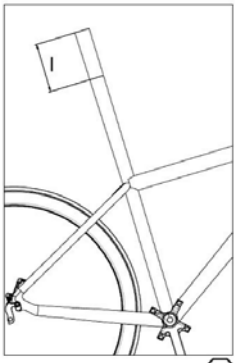

3

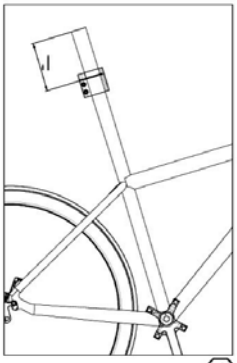

4

Important: pls note that the change to another saddle or pedal model might influence a lot the length of the seat tube!

1. Take the exact measure of the distance (d1) from the mid of axle of your pedal to the upper side of the saddle you use already on your "old" bike which is exactly adjusted to your seat position. **[1]**

2. Mount your pedals and saddle on the Scale bike.
Fix the saddle with the M5 screws (4mm Allen key) by using a tightening torque of 5Nm (44 in-lbs).

Your Scale seat clamp allows you to vary the seat height for fine adjustment of +/- 10mm. For the cutting, position your seat clamp as low as possible and measure the distance (d2) **[2]** from the mid of the pedal axle to the upper side of the saddle.

Remove the seat clamp and measure the distance (l) **[3]** from the top of the seat tube: l = d2 – d1

3. Indicate the length (l) you want to cut on the seat tube with a marker pen.

4. Slide the Scale Cutting Tool on the seat tube of Scale until the line of the marker is visible in the slot on the tool that will guide your saw blade. **[4]**

5. Fix the two 5mm bolts with a 4mm Allen key with a tightening torque of 6 Nm (53 in-lbs).

6. Take a saw with a blade for cutting metal.
Please only use a 10D/24T teeth blade to make sure not to damage the carbon tube

7. Cut the tube, remove the tool and take sandpaper to smoothen the edges of the cutting area.

8. Remount the seat clamp in its middle adjustment position (15mm over the top of the seat tube), fix the 2 M5 screws of the seat clamp (4mm Allen key) with a tightening torque of 5Nm (44 in-lbs)

The models of the Scale alloy line got in MY 08 new frames with hydro-formed tubing to offer increased stiffness at same weight. Geometry remains unchanged.

TECHNICAL DATA/GEOMETRY SCALE 08

Size	Headangle	HT Length	TT Horizon	Seatangle	Top ST	CST Length	BB OS
S	70.5°	105	555	73.5°	390	420	-30
M	71°	115	580	73.5°	440	420	-30
L	71°	130	600	73°	480	420	-30
XL	71.5°	150	620	73°	530	420	-30
XXL	71.5°	160	640	73°	580	420	-30

XXL only for alloy frame!

Headset	1 1/8“ semi integr. with 44.0 mm cups
Seatpost diameter carbon frame	34.9 mm
Seatpost diameter alloy frame	31.6 mm
BB housing	73 mm carbon/68 mm alloy
Front derailleur carbon frame	E-type, top route
Front derailleur alloy frame	34.9 mm clamp, dual pull
Fork travel	100 mm

Special parts

202863	REPLACEABLE DROPOUT Scale 07 one size
206375	DROPOUT+SCREW ALL MTB SINCE'97 5-PK one size
204648	REPAIR SET DROPOUT SCALE 05/06 no size
203931	CABLE FIXING SET GENIUS/SCALE black
1518364010000	SEATCLAMP 38.4mm w/Quick Release JD-MC
1518364020000	SEATCLAMP 38.4mm w/bolt JD-RC
1518364030000	SEATCLAMP 38.4mm w/titan.bolt JD
1558605110000	CHAINSUCK PROTECTOR Scale carbon

SUPPLÉMENT DU MANUEL A POUR SCOTT SCALE

Si votre vélo est équipé d'une tige de selle intégrée, suivez les instructions indiquées ci-dessous pour couper le tube de selle à la longueur appropriée.

La tige de selle du Scale doit être coupée et ajustée à votre hauteur d'assise.

Avec l'outil livré avec votre Scale, vous pourrez couper correctement le tube de selle, sans risquer de l'endommager.

Pour ce faire, veuillez suivre les instructions indiquées ci-dessous:

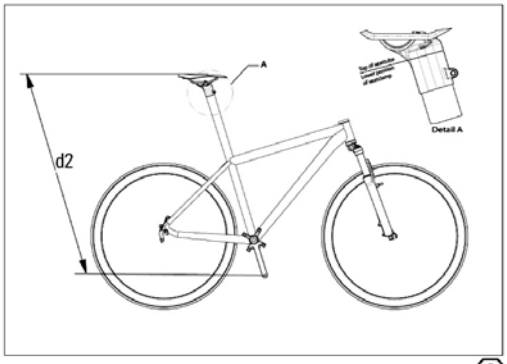

2

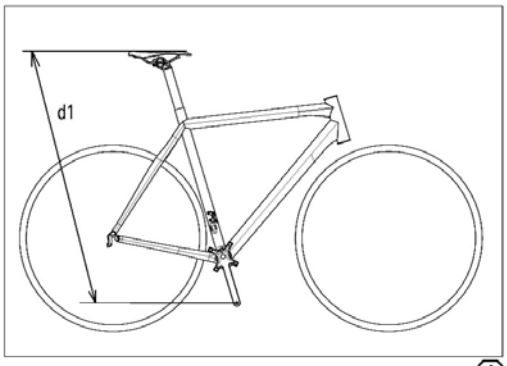

1

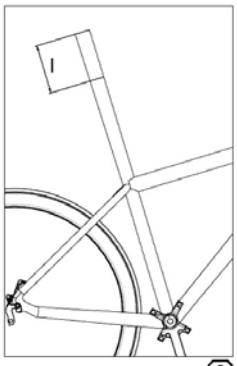

3

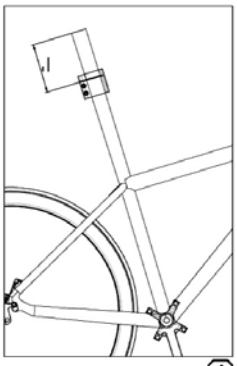

4

Attention : veuillez noter que si vous changez de modèle de selle ou de pédale, vous risquez de modifier sensiblement la longueur du tube de selle nécessaire!!

1. Mesurez avec précision la distance (d1) entre le milieu de l'axe de la pédale et la face supérieure de la selle que vous utilisez déjà sur votre « ancien » vélo, réglée exactement sur votre position assise. **[1]**

2. Montez les pédales et la selle sur le Scale. Fixer la selle avec les vis M5 (à l'aide d'une clé Allen de 4 mm), en appliquant un couple de serrage de 5 Nm.
Le chariot de selle vous permet de varier la hauteur de la selle à 10 mm près.
Pour couper le tube, positionnez le chariot le plus bas possible et mesurez la distance (d2) **[2]** entre le milieu de l'axe de la pédale et la face supérieure de la selle. Retirez le chariot et mesurez la distance (l) **[3]** depuis le haut du tube :
l = d2 – d1 mm.

3. Faites un repère au marqueur sur le tube pour indiquer la longueur (l) à laquelle vous souhaitez le couper.

4. Glissez l'outil de coupe Scale sur le tube, jusqu'à ce que le repère apparaisse dans la rainure qui vous guidera pendant que vous scierez. **[4]**

5. Fixez les deux vis de 5 mm à l'aide de la clé Allen de 4 mm, en appliquant un couple de serrage de 6 Nm.

6. Munissez-vous d'une scie à métaux.
Utilisez exclusivement une lame dentée 10D/24T, afin de ne pas endommager le tube en carbone.

7. Coupez le tube, enlevez l'outil de coupe et émoussez les bords du tube à l'aide de papier de verre.

8. Remontez le chariot de selle dans sa position la plus basse et fixez la selle en vissant les vis M5 à l'aide d'une clé Allen de 4mm, avec un couple de selle sur le tube de selle en vissant les deux vis M5 du chariot (clé Allen 4mm) avec un couple de serrage de 5Nm/ 44in-lbs.

ERGÄENZUNG ZUR BEDIENUNGSANLEITUNG A FÜR SCOTT SCALE

Falls Ihr Scale mit einer integrierten Sattelstütze ausgestattet ist, so gehen Sie bitte zur Anpassung der Sattelhöhe auf Ihre persönliche Sattelhöhe wie folgend beschrieben vor:

Um die individuelle Sitzhöhe des Fahrers einzustellen, muss die Sattelstütze des Scott Scale abgeschnitten werden.

Das hierzu benötigte Werkzeug liegt Ihrem Scale bei und hilft Ihnen das Sitzrohr perfekt abzuschneiden, ohne den Rahmen zu beschädigen.

Die folgende Anleitung wird Ihnen helfen das Sitzrohr des Scale so wenig wie nötig zu kürzen.

Bitte gehen Sie hierzu wie folgend beschrieben vor:

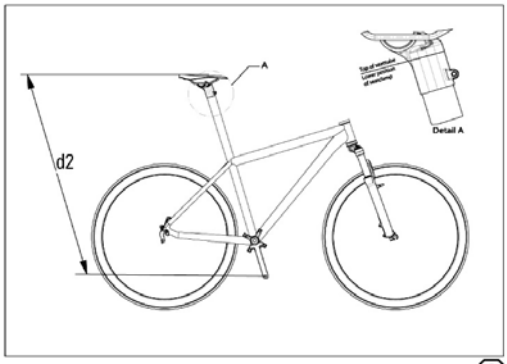

2

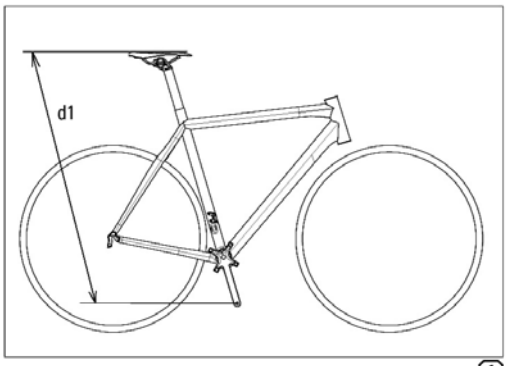

1

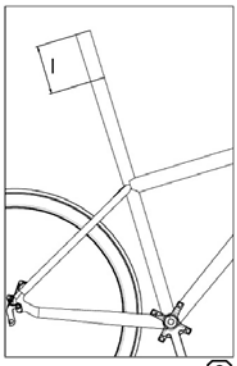

3

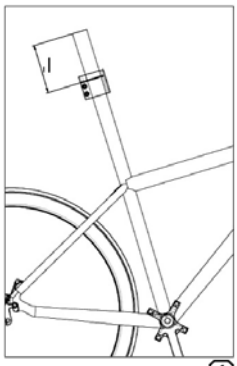

4

Wichtig: bitte beachten Sie, dass ein anderer Sattel oder ein anderes Pedal die Länge des Sitzrohres erheblich beeinflussen kann!

1. Nehmen Sie das exakte Maß der Distanz (d1) zwischen der Mitte der Pedalachse und der Oberkante der Sitzfläche des Sattels, das Sie bereits bei Ihrem „alten" Rad haben, das exakt auf Ihre Sitzposition eingestellt ist. **[1]**

2. Montieren Sie Ihre Pedale und den Sattel an Ihr Scale Bike. Montieren Sie den Sattel mit den M5 Schrauben (4mm Inbusschlüssel) mit einem Drehmoment von 5 Nm/44in-lbs.

Die Sattelklemme des Scale ermöglicht Ihnen eine Feineinstellung der Sattelhöhe von +/- 10mm. Für das Kürzen des Sitzrohres schieben Sie die Sattelklemme soweit wie möglich auf dem Sitzrohr nach unten und messen Sie die Distanz (d2) **[2]** zwischen der Mitte der Pedalachse und der Oberkante der Sitzfläche des Sattels.

Entfernen Sie nun die Sattelklemme incl. Sattel und messen Sie die Distanz (l) **[3]** von der Oberkante des Sitzrohres aus:
l = d2 – d1

3. Markieren Sie die Distanz (l), die Sie abschneiden möchten, mit einem Lackstift.

4. Schieben Sie die Scale Sägeführung auf dem Sitzrohr nach unten, bis der Sägeführungsspalt mit Ihrer Sägemarkierung übereinstimmt. **[4]**

5. Ziehen Sie die beiden M5 Schrauben (4mm Inbusschlüssel) mit einem Drehmoment von 6 Nm/53in-lbs an.

6. Nehmen Sie eine Säge mit einem Sägeblatt für Metal. **Verwenden Sie bitte unbedingt ein Sägeblatt mit einer Sägezahnung von 10D/24Z um Beschädigungen des Carbonrohres zu vermeiden**

7. Schneiden Sie das Rohr ab, entfernen Sie die Sägeführung und entgraten Sie die Schnittkanten mit Sandpapier.

8. Montieren Sie die Sattelklemme nun der tiefstmöglichen Position und befestigen Sie den Sattel mit einem Drehmoment von 5 Nm/44in-lbs mit Hilfe der M5 Schrauben mit einem 4mm Inbusschlüssel.
Ziehen Sie die zwei M5 Schrauben der Sattelklemme (4mm Inbusschlüssel) mit einem Drehmoment von 5 Nm/44 in-lbs an.

RANSOM

10

Ransom MY 08 got a change on the main pivot axle:

By this action we can solve problems with moving shims on the axle and resulting lateral movement of the chainstays.

In case of problems on bikes of MY 07 you can order those axles in our system.

210426	MAIN PIVOT AXLE SET RANSOM 1size	PCE	2008

GEOMETRY/TECHNICAL DATA RANSOM 30/40 (ALLOY)

Size	Headangle	HT Length	TT Horizon	Seatangle	Top ST	CST Length	BB OS
S	67°	110	560	73.5°	440	430	+ 16
M	67°	110	585	73.5°	460	430	+ 16
L	67°	120	610	73.5°	480	430	+ 16
XL	67°	130	635	73.5°	510	430	+ 16

GEOMETRY/TECHNICAL DATA RANSOM LTD/10/20

Size	Headangle	HT Length	TT Horizon	Seatangle	Top ST	CST Length	BB OS
S	68°.	110	560	73.5°	440	430	+ 16
M	68°.	110	585	73.5°	460	430	+ 16
L	68°.	120	610	73.5°	480	430	+ 16
XL	68°.	130	635	73.5°	510	430	+ 16

Travel	165/100/0 mm
Suspension Ratio	3.30
Shock (Eye to Eye)	190 mm
Hardware Mainframe	18.0 mm x 6 mm
Hardware Link	22.2 mm x 6 mm
Seatpost diameter	34.9 mm
Headset	1 1/8“ semi integr. with 44.0 mm cups
Fork travel	145 mm – 160 mm
Fork length	540 mm
BB housing	73 mm
Front derailleur	Topswing 31,8 mm downpull
Chainguard	ISCG Standard
Bearings	4 x 61900 (22x10xT6), 4 x 63800 (19x10xT7), 2 x 605 (14x5xT5)

Special parts

210428	CHAINSUCK PROTECTOR ISCG 1size	PCE	2008

206953	SEATSTAY PROTECTOR RANSOM one size
204875	REMOTE CONTROL LEVER EQUALIZER no size
204876	MUD GUARD EQUALIZER no size
204877	SHOCK MOUNT/BUSHING SET EQUALIZER no size
203648	TOOL- SWINGARM RANSOM one size
203932	CABLE FIXING SET REFL.FX/RANSOM black
202781	12mm AXLE 135mm swing.width one size
202780	RIGHT DROPOUT IDS 12mm thr.axle one size
202779	RIGHT DROPOUT IDS std axle one size
206819	DROP OUT RIGHT FOR MAXLE one size
206796	DROP OUT IDS MAXLE SET
206939	SEATPOST SHIM f. Maverick Speedball one size
1518364010000	SEATCLAMP 38.4mm w/Quick Release JD-MC
1518364020000	SEATCLAMP 38.4mm w/bolt JD-RC
1518364030000	SEATCLAMP 38.4mm w/titan.bolt JD

ASPECT / ASPECT FX

11

For MY 08 Scott had to change the Reflex name by some trademark issues to Aspect. Please note that some bikes in countries which are not affected from this name change still got in their first deliveries bikes with the Reflex name.

All specs are 100% same as shown on Workbook/Catalogue under the name Aspect.

GEOMETRY/TECHNICAL DATA ASPECT FX

Size	Headangle	HT Length	TT Horizon	Seatangle	Top ST	CST Length	BB OS
S	69°	100	555	74°	430	428	0
M	69.2°	120	572	73.7°	460	428	0
L	69.4°	125	594	73.3°	500	428	0
XL	69.6°	150	616	73°	540	428	0

Travel	0/110 mm
Shock (Eye to Eye)	220 mm
Hardware Mainframe	15.1.817.403.0.000
Hardware Swingarm alloy	15.1.817.403.0.000
Seatpost diameter	31.6 mm
Headset	1 1/8“ semi-integrated ahd, 44.0 mm cups
Fork travel	100 mm
Fork length	476 mm
BB housing	73 mm
Front derailleur	Topswing E-Type downpull
Bearings	L-1910 RS 8 St.

GEOMETRY/TECHNICAL DATA ASPECT 10-30

Size	Headangle	HT Length	TT Horizon	Seatangle	Top ST	CST Length	BB OS
XS	69.5°	105	545	74.5°	350	427	-32
S	70°	115	555	74°	390	427	-32
M	70.5°	130	570	73.5°	440	427	-32
L	70.5°	145	585	73.5°	500	427	-32
XL	71°	160	600	73°	570	427	-32
XXL	71°	175	620	73°	600	427	-32

Headset Aspect 10-30	1 1/8“ semi-integrated ahd, 44.0 mm cups
BB housing	68 mm
Seatpost diameter	26.8 mm

GEOMETRY/TECHNICAL DATA ASPECT 40-70

Size	Headangle	HT Length	TT Horizon	Seatangle	Top ST	CST Length	BB OS
XS	69.5°	110	545	74.5°	350	427	-32
S	70°	110	555	74°	390	427	-32
M	70.5°	120	570	73.5°	440	427	-32
L	70.5°	135	585	73.5°	500	427	-32
XL	71°	150	600	73°	570	427	-32

Headset Aspect 40-60 1 1/8“ semi-integrated ahd, 44.0 mm cups
BB housing 68 mm
Seatpost diameter 26.8 mm

Special parts

210005	FORK Suntour XCR H-LO 100mm08 black
210006	FORK Suntour XCM H-LO 100mm08 black
210006	FORK Suntour XCM H-LO 100mm08 white
210007	FORK Suntour XCM 100mm 08 black
210008	FORK RST Capa C8 75mm black
203931	CABLE FIXING SET GENIUS/SCALE black
203932	CABLE FIXING SET REFL.FX/RANSOM black
210104	RIM ALEX ACE 24 CNC 32H blk black

SCOTT SHOX SERVICE 08

12

For the recommended annual maintenance of Scott Shox we will have info shown below on our web site to guide the consumers and dealers.

SCOTT SHOCKS SERVICE/WARRANTIES

For the maintenance of Scott Shocks please follow the service indications as shown below:

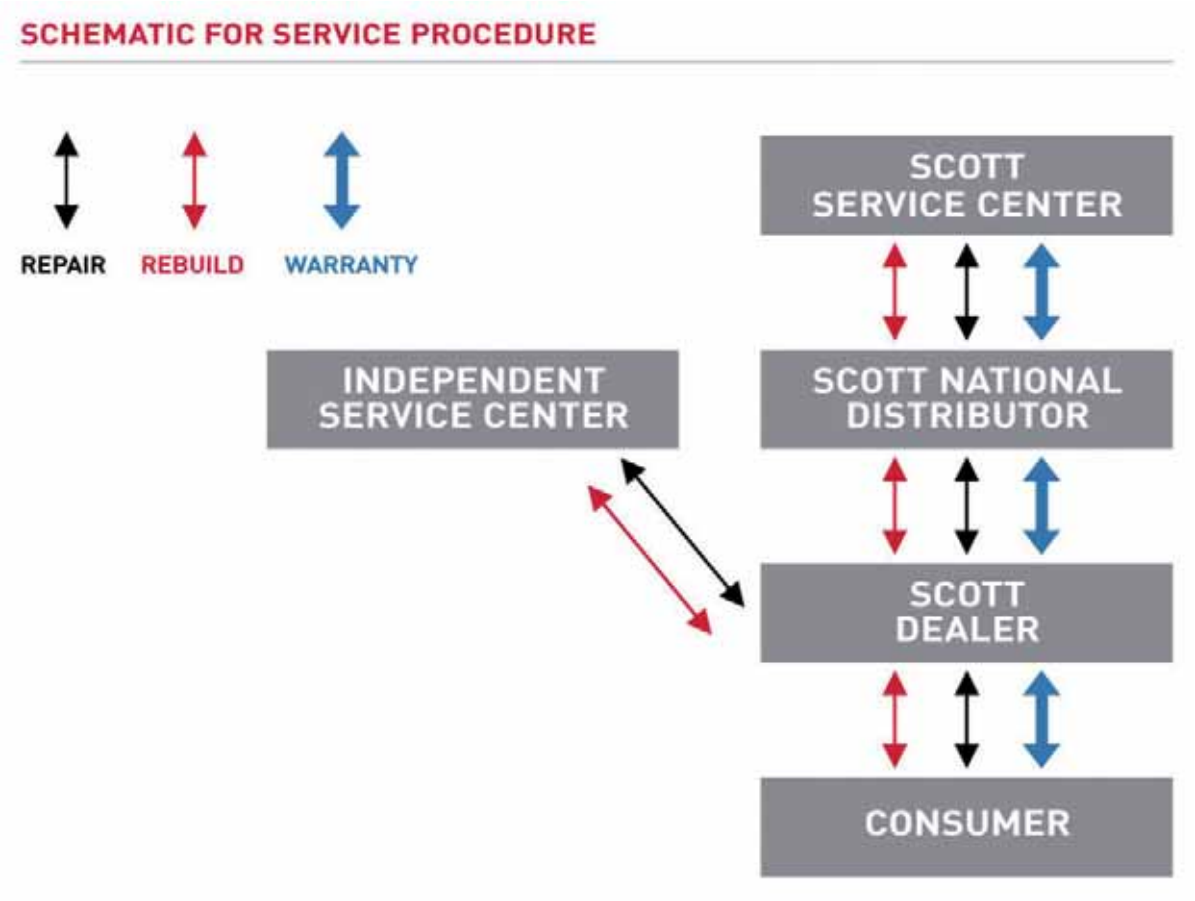

The annual maintenance of the Scott Shock is obligatory to keep the 2 years of warranty period as otherwise the shock will suffer from wear and tear which is not included in warranty.

Please check for details your Scott Shock Owners Manual.

For the annual maintenance pls contact your national Scott Shock Service Center as shown in the list below via your authorized Scott dealer.

We recommend the BASIC MAINTENANCE once a year and the DELUXE MAINTENANCE every 2 years.

BASIC MAINTENANCE

> new oil
> all seals of air can
> all sliders
> new decals

Recommended retail price at your Scott Dealer:

Genius TC	>	70 €
Equalizer OTS	>	70 €
Scott LC	>	65 €
Scott LC-R	>	65 €

plus additional freight costs.

This price is recommended in case the shock was given to a Scott Service Center by your local Scott dealer.

DELUXE MAINTENANCE

> new oil
> all seals of moving parts
> all sliders
> all O-rings
> new decals

Recommended retail price at your Scott Dealer:

Genius TC	>	110 €
Equalizer OTS	>	110 €
Scott LC	>	105 €
Scott LC-R	>	105 €

plus additional freight costs.

This price is recommended in case the shock was given to a Scott Service Center by your local Scott dealer.

At the moment we can present you following

AUTHORIZED INDEPENDENT SHOCK SERVICE CENTER

BIKE SUSPENSION CENTER - ITALY
Via Monte Leone 4
Cermes (BZ) Italy
39010
Phone +39 0473 56 3107
Fax +39 0473 55 9630
info@pepi.it
www.bikesuspension.com

SCOTT SPORTS UK – UK
x
x
x
x
x
x

SCOTT SPORTS LTD. UK
Branch United Kingdom
12 Enterprise Court
Crosland Park
Northumberland
Cramlington
United Kingdom
+44 (1) 670 712 129
info@scott-sports.uk.com

SABMA - BENELUX/FRANCE
Rue Neuve 12
4720 Kelmis
Benelux
Phone +32 87 631980
Fax +32 87 631978
info@sabma.com
www.sabma.com

KOEHN/RESET - GERMANY/AUSTRIA
Göttinger Chaussee 12-14
D-30453 Hannover
Phone +49 511 9245429
Fax +49 511 9245449
info@reset-racing.de
www.reset-racing.de

SUSPENSION CENTER - SWITZERLAND
Gurnigelstrasse 11
CH-3132 Riggisberg
Switzerland
Phone +41 31 809 30 20
Fax +41 31 809 30 22
suspension.center@bluewin.ch
www.suspensioncenter.ch

BM SPORTECH, S.A. SPAIN
Service Tecnic Spain
Francisco Huerta
C/TERRACINA, 12 PLA-ZA
ZARAGOZA, 50197
ESPAÑA
Phone +34 976 460 909
Fax +34 976 322 453
Fran.huerta@bmsportech.es

COLORADO TRADERS LTD
Ian Shaw,
NZ-Auckland
Tel. +64 9 274 6873
Fax. +64 9 274 6874
bikesupport@colorado-traders.co.nz

KIAN HONG CYCLE PTE LTD
Sdiann Ng
3 Kaki Bukit Road 1
#B1-05 Eunos Technolink
Singapore 415935
Singapore
Tel. +65 (67) 49 57 87
Fax. +65 (67) 49 57 89
sdiann@khcycle.com.sg

XENON SPORTS INTL.
Mark Kee
#195 Songneung-ri Jingeon-eup
Namyangju city Kyonggi-do
Korea
Tel. +82 31 555 00 77
Fax. +82 31 555 00 88
xenon@netsgo.com

STAND JASMA LDA
aime Almeida
Rua do Minho No 4C/D
2845-097 Amora
Portugal
Phone +351 (212) 268 838
Fax +351 (212) 268 353
jaimealmeida@jasma.pt

MICA SPORT CANADA INC.
Andrew Doble
Bracebridge
Ontario P1L 1P8
Canada
Phone +1 (705) 646 24 62
Fax +1 (705) 646 24 64
andrew@micasport.com

SCOTT SOUTH AFRICA
Pieter du Plessis
Serenade Road
Elandsfontein
Johannesburg 1406
South Africa
Phone +27 (11) 828 1467
Fax +27 (11) 822 2874
pieterdp@scott-sports.co.za

PUSH Industries, Inc.
only Equalizer OTS
Darren Murphy
6760 North Franklin Ave
80538 Loveland CO
United States of America
Tel. +1 (970) 278 11 10
Fax +1 (970) 278 94 50
dm@pushindustries.com

GARAGEWORKS SUSPENSION
only Equalizer OTS
Steve Delacruz
204-ETechnology Way
Irvine; CA 92618
United States of America
Phone +1 (949) 861 22 44
steve@garageworkssuspension.com

NETTI ATOM, AUSTRALIA
Gavin Barnes
39/1A Coulson Street
P.O. Box 123
Alexandria, NSW 2015
Australia
Phone +61 (2) 9550 1655
Fax +61 (2) 9550 2030
GavinB@netti.com.au

GOLDWIN INC.
Kiyoshi Takeuchi
2-20-6, Shoto,
Shibuya-ku,
Tokyo 150-8517
Japan
ki-takeuchi@goldwin.co.jp

IGP
Rapha Caliendo
Rua Pres. Hermes
70, Bairro Santa Rita
13335-070 Indaiatuba, Sao Paolo
Brazil
Phone +55 (19) 3875 70 75
Fax +55 (19) 3875 91 25
raphael@scott.com.br

RTECH SUSPENSION OY
Finland, Norway, Sweden, Estonia
Mikko Norvasto
Näsilinnankatu 29
33200 Tampere
Finland
Phone +358 (3) 214 87 55
rtech@oeoe.fi

PROLOCOTRADE D.O.O.
Matjaz Bogataz
Cesta na Rupo 49
4000 Kranj
Slovenia
luc@prolocotrade.si

We are working on offering more partners for maintenance in all countries Scott is on the market, so our target is to offer in the next years for all countries a partner for service.

PLEASE NOTE

All warranties on Scott Shocks must always be given via your local Scott dealer (and the national Scott distributor) only to Scott Service Centers as shown in the diagram above.

Some examples why it really pays off to go for annual maintenance:

In case you have a warranty claim after 17 months but can prove with the stamp and invoice of an Authorized Independent Service Center that your shock was at annual maintenance, Scott will accept the warranty.

In case you can not show a proof of maintenance after 12 months when demanding for a repair on warranty base we will invoice all costs of the repair.

Shocks given to Scott Service Center without this proof will be repaired and invoiced to you.

SCOTT RESERVES THE RIGHT ON ALL FINAL DECISIONS CONCERNING WARRANTY CLAIMS.

Please make sure to deliver always the proper paperwork with the shock in case of a warranty claim.

VOLTAGE

13

On Voltage MY 08 we have some small geometry changes in comparison to MY 07.

Please note that YZ0.5 and LTD are only available in 1 size and with shorter chainstays than in MY 07.

GEOMETRY/TECHNICAL DATA VOLTAGE YZ1, YZ2, YZ3, YZ15, YZ 25, YZ35

Size	Headangle	HT Length	TT Horizon	Seatangle	Top ST	CST Length	BB OS
XS	68.5°	100	540	74°	335	430	-32
S	69°	110	550	73.5°	375	430	-32
M	69°	120	560	73°	415	430	-32
L	69.5°	135	570	73°	465	430	-32
XL	69.5°	150	585	73°	515	430	-32

Headset 1 1/8“ standard ahd
BB housing 68 mm
Seatpost diameter 26.8 mm

GEOMETRY/TECHNICAL DATA VOLTAGE YZ0

Size	Headangle	HT Length	TT Horizon	Seatangle	Top ST	CST Length	BB OS
XS	68.3°	100	540	74°	335	410	-32
M	69°	120	560	73°	410	410	-25

Headset 1 1/8“ standard ahd
BB housing 73 mm
Seatpost diameter 26.8 mm

GEOMETRY/TECHNICAL DATA VOLTAGE YZ0.5 AND YZ LTD

Size	Headangle	HT Length	TT Horizon	Seatangle	Top ST	CST Length	BB OS
one size	68°	115	575	71°	335	410	-15

Headset 1 1/8“ standard ahd
BB housing 73 mm
Chainguard ISCG Standard
Seatpost diameter 26.8 mm

Special parts

202781	12 mm AXLE 135mm swing.width one size
202780	RIGHT DROPOUT IDS 12 mm thr.axle one size
202779	RIGHT DROPOUT IDS std axle one size
200735	RIM SUN MTX 32H 26" black one size
200724	HUB SUN RIGLE LAWWILL one size
206819	DROP OUT RIGHT FOR MAXLE one size
206916	RIM ALEX DM-18 32H black
206944	BAR PILOT FR 1.5 Pro D.B. white 700 mm
210115	SADDLE VOLTAGE Dirt J 8mm rails 1size
210005	FORK Suntour XCR H-LO 100 mm 08 black
210006	FORK Suntour XCM H-LO 100 mm 08 black
210006	FORK Suntour XCM H-LO 100 mm 08 white
210007	FORK Suntour XCM 100 mm 08 black

CONTESSA/CONTESSA FX

14

GEOMETRY/TECHNICAL DATA CONTESSA FX

Size	Headangle	HT Length	TT Horizon	Seatangle	Top ST	CST Length	BB OS
S	69°	113	530	74°	430	428	4
M	69.5°	133	550	73.7°	460	428	4
L	69.5°	148	570	73.3°	480	428	4

Travel 0/75/110 mm (FX25)/125(FX15)
Shock (Eye to Eye) 220 mm
Hardware Mainframe 15.1.817.403.0.000
Hardware Swingarm 15.1.817.403.0.000
Seatpost diameter 31.6 mm
Headset 1,1/8" semi-integr. 44.0 mm cups
Fork travel 100
BB housing 73 mm
Front derailleur Topswing E-Type Downpull

Special parts

1558605030000	SWINGARM-REP.Set GENIUS Carb.MC04/05
206375	DROPOUT+SCREW ALL MTB SINCE'97 5-PK one size

GEOMETRY/TECHNICAL DATA CONTESSA SPORT

Size	Headangle	HT Length	TT Horizon	Seatangle	Top ST	CST Length	BB OS
XS	69°	100	540	74°	330	430	-32
S	69.5°	110	545	73.5°	370	430	-32
M	70°	120	555	73°	410	430	-32
L	70°	135	565	73°	460	430	-32
XL	70.5°	150	575	73°	510	430	-32

Headset 1 1/8" semi-integrated ahd, 44.0 mm cups, 1 1/8 std ahd
BB housing 68 mm
Seatpost diameter 26.8 mm

Please note that only Contessa 20 and 30 are available in XL frame size

Special parts

206375	DROPOUT+SCREW ALL MTB SINCE'97 5-PK one size	2006
210116	SADDLE CONTESSA MTB 1size	2008

GEOMETRY/TECHNICAL DATA CONTESSA SPEEDSTER

Size	Headangle	HT Length	TT Horizon	Seatangle	Top ST	CST Length	BB OS
XXS/47	70.5°	105	505	75°	470	405	-67
XS/49	71°	110	515	75°	490	405	-67
S/52	72.5°	130	530	74.5°	520	405	-67
M/54	73°	150	545	74°	540	405	-67
L/56	73°	170	560	73.5°	560	405	-67

Headset 1 1/8“ semi integr. with 44.0 mm cups
BB housing 68 mm
Seatpost diameter 31.6 mm
Front derailleur Braze on, downroute

Special parts

210022	FORK CR1 CONTESSA SPEED.08 1size
206376	DROPOUT+SCREW AFD 98->02 2-PAK one size

ADDICT

15

On Addict you will find in MY 08 all complete bikes equipped with an integrated seatpost.

ADDICT LTD

Beside this we have a new model, named Addict R4 which is made from HMF net fibre instead of HMX net fibre. This results in a frame weight of 950 grams and a fork weight of 390 grams at same stiffness and durability of the frame.

GEOMETRY/TECHNICAL DATA ADDICT

Size	Headangle	HT Length	TT Horizon	Seatangle	Top ST	CST Length	BB OS
XS/49	71°	105	520	74.5°	490	405	-67
S/52	72°	120	535	74°	520	405	-67
M/54	73°	140	550	73.3°	540	405	-67
L/56	73°	160	565	73.3°	560	405	-67
XL/58	73.3°	180	580	73°	580	405	-67
XXL/61	73.3°	200	595	72.5°	610	405	-67

Headset	1 1/8“ semi integr. 44.0 mm cups
BB housing	68mm for threaded BB type
Seatpost diameter	31.6 mm
Front derailleur	Braze on, downroute

Special parts

208358	SEATCLAMP ADDICT 34.9mm
208363	FD-FIX. BOLT+ADAPTER ADDICT
208360	ANTICHAINSUCKPLATE ADDICT
208361	ANTICHAINSUCKCLAMP ADDICT
208364	SHIMANO int. BB ISMFC7800P
206472	DROPOUT ADDICT
206940	CUTTING TOOL SEATTUBE ADDICT 349
206937	SEATCLAMP ADDICT STD one size
206938	SEATCLAMP ADDICT LONG one size
210324	SEATPOST ADPT.RITCHEY STUBBY/S.IT 1 size
210331	Set ADPT.RITCHEY STUBBY for Carbon rails S. Italia/Fizik
210024	FORK ADDICT LTD 08 1size
210025	FORK ADDICT R1 08 1size
210026	FORK ADDICT R2 08 1size
210027	FORK ADDICT R3 08 1size
210028	FORK ADDICT R4 08 1size

16

GEOMETRY/TECHNICAL DATA CR1

Size	Headangle	HT Length	TT Horizon	Seatangle	Top ST	CST Length	BB OS
XS/49	71,0°	110	515	75°	490	405	-67
S/52	72.5°	130	530	74,5°	520	405	-67
M/54	73.°	150	545	74.°	540	405	-67
L/56	73.°	170	560	73.5°	560	405	-67
XL/58	73.3°	190	575	73.3	580	405	-67
XXL/61	73.3°	210	595	73.3	610	405	-67

Headset	1 1/8“ semi integr. 44.0mm cups
BB housing	68mm
Seatpost diameter	31.6mm
Front derailleur	Braze on, downroute

Frames of CR1 to be replaced on warranty will be replaced with following articles:

- **209687 frame set CR1 Pro MY 08 for all frames/bikes of CR1 Team and Pro of MY 05, 06, 07**
- **209682 frame set Addict R4 MY 08 for all frames/bikes of CR1 LTD, Team Issue and SL of MY 05, 06, 07**

Please note that we will not accept other replacements on those frames.

Special parts

210019	FORK CR1 TEAM 08 1size
210020	FORK CR1 PRO 08 1size
1518364040000	SEATCLAMP 34.4mm w/bolt f/Cr1&scandium
1558605100000	CHAINSUCK PROTECTOR CR1 road
208362	ANTICHAINSUCKCLAMP 34.9

17

The models of the Speedster line got in MY 08 new frames with hydro-formed tubing to offer increased stiffness at same weight. Geometry remains unchanged.

GEOMETRY/TECHNICAL DATA SPEEDSTER

Size	Headangle	HT Length	TT Horizon	Seatangle	Top ST	CST Length	BB OS
XS/49	71°	110	515	75°	490	405	-67
S/52	72.5°	130	530	74.5°	520	405	-67
M/54	73°	150	545	74°	540	405	-67
L/56	73°	170	560	73.5°	560	405	-67
XL/58	73.3°	190	575	73.3°	580	405	-67
XXL/61	73.3°	210	595	73.3	610	405	-67

Headset	1 1/8“ semi integr. 44.0 mm cups
BB housing	68 mm
Seatpost diameter	31.6 mm
Front derailleur	Braze on, downroute

Special parts

206922	RIM JALCO GX 460 700C 28H black
206923	RIM JALCO GX 460 700C 32H black
206376	DROPOUT+SCREW AFD 98->02 2-PAK one size
208362	ANTICHAINSUCKCLAMP 34.9
206376	DROPOUT+SCREW AFD 98->02 2-PAK one size
210017	FORK ADDICT TEAM f/Speedster 08 1size
210018	FORK ADDICT FB TEAM f/Speedster 08 1size

PLASMA

18

GEOMETRY/TECHNICAL DATA PLASMA

Size	Headangle	HT Length	TT Horizon	Seatangle	Top ST	CST Length	BB OS
XS/49	71°	100	505	76°	660	395	-67
S/52	71.5°	110	520	76°	700	395	-67
M/54	72°	120	535	76°	740	395	-67
L/56	72.5°	140	552	76°	780	395	-67
XL/58	72.5°	175	572	76°	820	395	-67

Headset 1 1/8“ semi integr. 44.0 mm cups
BB housing 68 mm
Front derailleur Braze on, downroute

Special parts

200614	BRKLEVER Set Profile QS2 black one size
206817	BRAKELEVER SET PROFILE QSC one size
206946	BAR PROFILE T2 Cobra one size
206947	BAR PROFILE T2 one size
206948	BAR PROFILE Cobra Wing 420mm
206949	BAR PAD KIT PROFILE one size
202777	CUTTING TOOL PLASMA one size
202776	SEATCL.PLASMA Rep. 50mm one size
202652	SEATCL.PLASMA Alloy+/-15mm one size
200750	STEM PROFILE LAVA OS black 100
200750	STEM PROFILE LAVA OS black 80
200750	STEM PROFILE LAVA OS black 90
210029	FORK PLASMA LTD 08 1size
210030	FORK PLASMA PRO 08 1size
210124	BAR Aero PROFILE Sonic CSX 1size
210125	BAR Pad Kit PROFILE f/SonicCSX 1size

CONTESSA RACE

19

GEOMETRY/TECHNICAL DATA CONTESSA PLASMA

Size	Headangle	HT Length	TT Horizon	Seatangle	Top ST	CST Length	BB OS
XS/49	71°	100	505	76°	660	395	-67
S/52	71.5°	110	520	76°	700	395	-67
M/54	72°	120	535	76°	740	395	-67
L/56	72.5°	140	552	76°	780	395	-67

Headset 1 1/8“ semi integr. With 44.0 mm cups
BB housing 68 mm
Front derailleur Braze on, downroute

Special parts

210021	FORK CR1 CONTESSA RACE 08 1size
202777	CUTTING TOOL PLASMA one size
202776	SEATCL.PLASMA Rep. 50mm one size
202652	SEATCL.PLASMA Alloy+/-15mm one size
206946	BAR PROFILE T2 Cobra one size
206947	BAR PROFILE T2 one size
206948	BAR PROFILE Cobra Wing 420mm
206949	BAR PAD KIT PROFILE one size
200750	STEM PROFILE LAVA OS black 100
200750	STEM PROFILE LAVA OS black 80
200750	STEM PROFILE LAVA OS black 90
200614	BRKLEVER Set Profile QS2 black one size

GEOMETRY/TECHNICAL DATA CONTESSA CR1

Size	Headangle	HT Length	TT Horizon	Seatangle	Top ST	CST Length	BB OS
XXS/47	70.5°	105	505	75°	470	405	-67
XS/49	71,0°	110	515	75°	490	405	-67
S/52	72.5°	130	530	74,5°	520	405	-67
M/54	73.°	150	545	74.°	540	405	-67
L/56	73.°	170	560	73.5°	560	405	-67

Headset 1 1/8“ semi integr. With 44.0mm cups
BB housing 68mm
Seatpost diameter 31.6mm
Front derailleur Braze on, downroute

Special parts

210023	FORK CR1 CONTESSA 08 1size
1518364040000	SEATCLAMP 34.4mm w/bolt f/Cr1&scandium
1558605100000	CHAINSUCK PROTECTOR CR1 road
208362	ANTICHAINSUCKCLAMP 34.9

GEOMETRY/TECHNICAL DATA CONTESSA SPARK

Size	Headangle	HT Length	TT Horizon	Seatangle	Top ST	CST Length	BB OS
S	69.5	110	555	73.5	400	422	-10
M	69.8	120	585	73.5	450	422	-10
L	70	140	610	73.5	490	422	-10

Travel	110/70/0 mm
Suspension Ratio	2.97
Piston stroke	37 mm
Shock length (Eye to Eye)	165 mm
Hardware Mainframe	22.2 mm x 6 mm,
Hardware Swingarm	22.2 mm x 6 mm,
Seatpost diameter	34,9 mm, some models with integrated seatpost
Headset	1 1/8“semi integr. with 44.0 mm cups
Fork travel	100 mm
Fork length	471 mm
BB housing	73 mm
Front derailleur	Downswing 34.9 mm Downpull
Bearings	2 x 61900 (22x10xT6), 6 x 63800 (19x10xT7)

Special parts

206951	CABLE FIXING SET SPARK one size
206473	DROPOUT SPARK 2-PAK
206952	SEATSTAY PROTECTOR SPARK one size
206954	ANTICHAINSUCK DEVICE SPARK one size
208359	SEATCLAMP W QR SPARK 38.25
206941	TOOL- SWINGARM SPARK one size
206950	SWINGARM-REP. SET SPARK one size
206908	LINKAGE BAR SET SPARK 07 L
206908	LINKAGE BAR SET SPARK 07 M
206908	LINKAGE BAR SET SPARK 07 S

GEOMETRY/TECHNICAL DATA CONTESSA SCALE

Size	Headangle	HT Length	TT Horizon	Seatangle	Top ST	CST Length	BB OS
S	70.5°	105	555	73.5°	390	420	-30
M	71°	115	580	73.5°	440	420	-30
L	71°	130	600	73°	480	420	-30

Headset	1 1/8“ semi integr. with 44.0 mm cups
Seatpost diameter carbon frame	34.9 mm
Seatpost diameter alloy frame	31.6 mm
BB housing	73 mm carbon/ 68 mm alloy
Front derailleur carbon frame	E-type, top route
Front derailleur alloy frame	34.9 mm clamp, dual pull
Fork travel	100 mm
Fork length	470 mm

Special parts

202863	REPLACEABLE DROPOUT Scale 07 one size
206375	DROPOUT+SCREW ALL MTB SINCE'97 5-PK one size
203931	CABLE FIXING SET GENIUS/SCALE black
1518364010000	SEATCLAMP 38.4mm w/Quick Release JD-MC
1518364020000	SEATCLAMP 38.4mm w/bolt JD-RC
1518364030000	SEATCLAMP 38.4mm w/titan.bolt JD
1558605110000	CHAINSUCK PROTECTOR Scale carbon

20

GEOMETRY/TECHNICAL DATA SUB 26”

Size	Headangle	HT Length	TT Horizon	Seatangle	Top ST	CST Length	BB OS
XS	69°	145	540	74°	434	430	-30
S	69.5°	155	550	73.5°	474	430	-30
M	70°	175	565	73°	514	430	-30
L	70°	195	580	73°	554	430	-30
XL	70.5°	205	590	73°	594	430	-30

Headset 1 1/8“ semi-integrated ahd, 44.0 mm cups
BB housing 68 mm
Seatpost diameter 26.8 mm

GEOMETRY/TECHNICAL DATA SUB 700C/CLASSIC

Size	Headangle	HT Length	TT Horizon	Seatangle	Top ST	CST Length	BB OS
S	70°	120	550	74°	490	450	-60
M	70.5°	135	565	73.5°	530	450	-60
L	71°	150	580	73°	570	450	-60
XL	71°	165	590	73°	610	450	-60

Headset 1 1/8“ semi-integrated ahd, 44.0mm cups
BB housing 68mm
Seatpost diameter 26.8mm

Special parts

203931	CABLE FIXING SET GENIUS/SCALE black
203932	CABLE FIXING SET REFL.FX/RANSOM black
210011	FORK SUB Pulo TL316 700C disc08 black
210012	FORK SUB Pulo TL316 26 disc08 black
210013	FORK SUB Pulo TL316 700C V-br.08 black
210014	FORK SUB Pulo TL316 26 V-br.08 black
206918	RIM ALEX SUB 26"32H disc black
206919	RIM ALEX SUB 700C 32H disc black
206920	RIM ALEX SUB 26"32H cnc black
206921	RIM ALEX SUB 700C 32H cnc black
210122	STEM NVO F2 100
210122	STEM NVO F2 110
210122	STEM NVO F2 120

21

The bikes of the Sportster P2 and P4 Men we added the frame size XXL as well as on P2 Lady and P4 Lady the size XL in MY 08.

GEOMETRY/TECHNICAL DATA SPORTSTER

Size	Headangle	HT Length	TT Horizon	Seatangle	Top ST	CST Length	BB OS
S	69°	110	550	74°	470	450	-60
M	70°	125	565	73.5°	510	450	-60
L	71°	140	580	73°	550	450	-60
XL	71.5°	155	595	73°	590	450	-60
XXL	72°	170	610	72°	620	450	-60

Headset 1 1/8“ semi-integrated ahd, 44.0 mm cups
BB housing 68 mm
Seatpost diameter 26.8 mm

The bikes of the Sportster P2 and P4 Men we added the frame size XXL as well as on P2 Lady and P4 Lady the size XL in MY 08.

GEOMETRY/TECHNICAL DATA SPORTSTER LADY

Size	Headangle	HT Length	TT Horizon	Seatangle	Top ST	CST Length	BB OS
S	69°	120	530	74°	440	450	-60
M	69.5°	130	545	73.5°	480	450	-60
L	70°	140	560	73.5°	520	450	-60
XL	70.5°	150	580	73°	560	450	-60

Headset 1 1/8“ semi-integrated ahd, 44.0 mm cups
BB housing 68 mm
Seatpost diameter 26.8 mm

Special parts

203931	CABLE FIXING SET GENIUS/SCALE black
203932	CABLE FIXING SET REFL.FX/RANSOM black
206831	FORK Suntour NCX-FT-D RL 700C black
206832	FORK Suntour NCX-D LO 700C black
210015	FORK Suntour NEX 4610 LO 700C black
210016	FORK Suntour NEX 4110 700C black
206919	RIM ALEX SUB 700C 32H disc black
206921	RIM ALEX SUB 700C 32H cnc black
210122	STEM NVO F2 100
210122	STEM NVO F2 110
210122	STEM NVO F2 120

CYCLOCROSS

22

Cyclocross got some changes on the frame in MY 08.
New we have the 30mm sloping top tube and a semi-integrated headset.

CX TEAM

GEOMETRY/TECHNICAL DATA SPORTSTER

Size	Headangle	HT Length	TT Horizon	Seatangle	Top ST	CST Length	BB OS
S	70°	100	520	74°	520	422	- 60
M	70.5°	120	530	73.5°	540	422	- 60
L	71°	140	545	73°	560	422	- 60
XL	71°	160	560	73°	580	422	- 60

Headset 1 1/8“ semi-integrated ahd, 44.0 mm cups
BB housing 68 mm
Seatpost diameter 31.6 mm

Special parts

206818	BRAKELEVER SET CYCLECROSS one size
208362	ANTICHAINSUCKCLAMP 34.9
210002	BRK TEKTRO CX w/CARTR.PADS 1size
210031	FORK CYCLOCROSS TEAM 08 1size

KIDS BIKES

23

Spark JR 20” and 24” is the new model in MY 08 in the kids bike line up.

For both bikes we offer a set for the repair of all swingarm pivots with following article numbers:

211332	Swingarm Rep SET SPARK 20 1size
211333	Swingarm Rep SET SPARK 24 1size

Beside the special parts for kids bikes mentioned below we also can support you with small parts from our office at Scott EU.

For parts like e.g. the bar/stem protector, chaincases etc. please contact Patrick Bochud or Holger Klinter at Scott Sports.

Special parts

1518403010000	WHEELS TRAINING for Radical 120 black
1518402180000	Wheels Training for Fox 160
210009	FORK RST Capa 24 C8 black
210010	FORK RST 200K 20 08 black
210096	FRAME JR TEAM ISSUE 08 24"
210097	FRAME JR VOLTAGE 08 24"
210098	FRAME SET JR RC SPARK 08 24"
210099	FRAME SET JR SPARK 08 20"
210106	SADDLE VOLTAGE JR 12 1size
210107	SADDLE VOLTAGE JR 16 1size
210108	SADDLE VOLTAGE JR 20 1size
210109	SADDLE VOLTAGE JR 24 1size
210110	SADDLE SCALE JR 20+24 1size
210111	SADDLE CONTESSA JR 12 1size
210112	SADDLE CONTESSA JR 16 1size
210113	SADDLE CONTESSA JR 20 1size
210114	SADDLE CONTESSA JR 24 1size
210325	AIR SHOCK SPARK RC JR 1size
200727	CRANKSET LASCO Double black 1size
200728	CRANKSET LASCO Triple black 1size
200729	CRANKSET FSA Alpha Dr.2 black 1size
200730	CRANKSET FSA Alpha Dr.3 black 1size

CARBON FIBRE– BURNING ANALYSIS/REPAIR OF FRAMES

24

CARBON FIBRE– BURNING ANALYSIS

As Scott is selling more and more carbon bikes we also get more questions concerning frames if they are warranty or not.

For sure we can not give a rule that will match with all problems you might be confronted, but we can offer you some details to give a rough guideline for a decision on warranty or not.

In case you are not 100% sure please contact Patrick Bochud or Holger Klinter at Scott EU and provide pictures in high resolution of the damage on the frame. We will try to give you by this a solution or recommendation.

In cases that are really doubtful, we can offer to send parts of the frame to the factory in Asia to make a burning analysis of the defective part to check the lay-up and to check if wrinkles were in the fibre layers caused by production fault.

Please be aware of the fact that the frame is 100% destroyed after this kind of analysis.

Timeline is approx. 4 weeks until we come back to you with a report as shown as examples below.

ANALYSIS REPORT

TTC QA of process analysis and improvement

Quality Report

Model Name	ADDICT	Model Year	MY07
Size	560	Serial NO.	STR04F15606120087
Manufacture date (lay-up)	2006-12-8	Report date	2007-7-27
QA of analysis report	Ronghan Wei		

Problem Detail

problem	description	Original photo of failure part
1	Crack on D/T	
2	-	-

Analysis Report

process	item	judgement	photos
1	Clearcoat layer	Crack (NG)	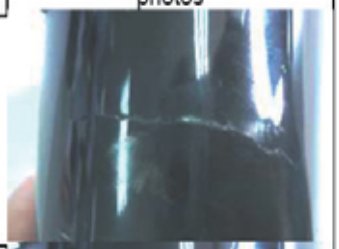
2	Scratch away the clear coat	Crack (NG)	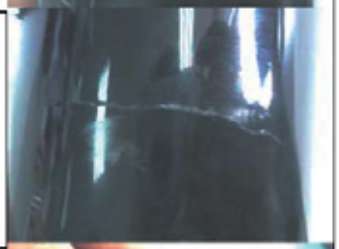
3	Burning and analyzing	Fibers layers broken (NG)	
4	-	-	-

Conclusion

After burning, peel the fiber layers one by one, no wrinkles on the fiber layers and smooth. But, all layers are crack.
It should have been cracked by outside force.

Ten-Tech Composite Technology Corporation

SCOTT

NO.6 22 ALLEY 409.LANE PU TSU STREET,
FENG YUAN CITY, TAICHUN, TAWIAN

Quality Report

Model Name	Addict	Model Year	MY07
Size	560	Serial NO.	STR03F15606120128
Manufacture date	Dec. 2006	Report date	2007-9-6
QA of analysis report	Bruce Xiang		

Problem Detail

Problem	description	photo
1	C/S broken	

Analysis

Process	item	judgment	photo
1	painting&clearcoat	Broken, NG	
2	Burning&analysis	Fiber broken, NG	

Conclusion

After the analysis and checking, the layers are accord with the lay-up design, no abnormal Problems, no wrinkles and no layer missing. The CS should broken by the outside force.

REPAIR OF FRAMES

In case a customer needs on a Cr1 bike a new drop-out or on Scale, CR1, Spark, Addict a new BB insert by his fault and does not want to buy a new frame we can offer you the address of a company that is able to repair carbon frames with this kind of damage on its own account.

Please note that Scott can not take direct any liability on repair works done by those companies.

Frames who suffered from impacts by crash or traffic accidents are not recommended to be used further-on or to be repaired, as invisible damages in the fibres can result later without any “pre-warning” in a crack of a tube or part of the frame.

Following company can offer you repair jobs on carbon frames by using the original Scott parts:

MAW Mariotto Art Works
Hof 9
CH- 4917 Busswil
Switzerland

Delivery address:

MAW Mariotto Art Works
Römerweg 111
CH- 4574 Lüsslingen
Switzerland

+41 76 365 65 40
info@maworks.ch
www.maworks.ch

For France and countries of the EU we can offer following address:

Véga Réalisations Composites
Laurent PASCUAL
113, route des Argos
74940 ANNECY-LE-VIEUX
France

Tel : 33/04 50 09 80 50
Fax : 33/04 50 66 15 57
Mobile : 33/06 08 25 90 11
e-mail : pascual@magic.fr
www.vega-realisations-composites.fr

We will work on offering you more info and details on more companies that will be able to help you in your country directly.

Please feel free to offer also from your side more details to us concerning repair companies in your countries.

NEW BB CARBON FIBRE LAY-UP ON ADDICT, CR1, SPARK AND SCALE

25

NEW BB CARBON FIBRE LAY-UP ON ADDICT, CR1, SPARK AND SCALE

25-01

In MY 08 we do a running change on the BB housing of Addict, Spark, CR1 and Scale.

To reinforce the alloy shell bonding with 2 cups assembled from both sides of the frame BB housing we add carbon layers on the outside of the shells.

This will help to bear the tightening torques during assembly of the BB cartridge assembly.

Please find below pictures for your reference:

WARRANTY CLAIMS OF BIKES OF MODEL YEAR 2003 OR OLDER

26

Please note that we will not replace frames/bikes older than model year 2003, as the warranty period of these bikes is over, at least for one year.

In case you want to claim bikes older than model year 2004 it is obligatory to give a copy of the consumer's bill of purchase to Scott together with the claim form to Scott to verify your claim.

Without this bill of purchase of the consumer we will reject the claim.

SCOTT

Bike Warranty Periods

	Year 1	Year 2	Year 3	Year 4	Year 5
All SCOTT Bikes (excl. Gambler)					
Gambler					
Genius TC/LC-R/Equalizer TC Shock					

Regular Warranty Period

Option for prolongation accordingn to maintenance intervals show in manuals attached to bike

AGREEMENT WITH SUPPLIERS ABOUT DIRECT WARRANTY SUPPORT TO DEALERS/NATIONAL SCOTT DISTRIBUTORS

27

AGREEMENT WITH SUPPLIERS ABOUT DIRECT WARRANTY SUPPORT TO DEALERS/NATIONAL SCOTT DISTRIBUTORS

27-01

Please note that we have an agreement with companies/brands named below for worldwide support on warranties of OE parts spec'd by Scott:

- Shimano
- Campagnolo
- SRAM
- DT-Swiss
- Ritchey
- Mavic
- Continental Tires
- Hutchinson Tires
- SR/SunTour
- Rock Shox (SRAM)
- Fox Racing Shox
- Marzocchi
- Hayes-Manitou-SUN-Ringlé
- Race Face
- E-13
- Syncros
- RST

The national distributor of the defective product will help you or your dealer to get warranty support in your country.

Therefore please contact him directly and add to the cleaned defective part the bill of purchase of the bike the part was mounted to help him to work efficient on your claim.

In case you get no help please do not hesitate to contact Scott to get help from our side.

We will try to push from our side then the producer directly to get help for you soon. To push we need detailed information about the part, a digital picture and name of the contact person at the distributor who refused to support you.

REPLACEABLE DROP OUTS SINCE 1995

28

In the past years we had several different replaceable drop-out hangers and want to give you below info about all different shapes and models we had.

This might help you to make directly an order at the Scott trading dept. in case you get a broken drop out hanger as a sample from one of your customers to get a replacement for him.

1518156010000 MY 1995 Vantage 3.0 Pro Only, Dual Pro

1518156020000 MY 1995 Pro Only Tandem, Vantage 1.0, Vantage 2.0, AFD 903

1518156040000 MY 1995 Dual Pro

1518156070000 MY 1996 Vertigo LSD, Vertigo LSD Pro

1518156080000 MY 1996 Vertigo LSD DH, Vantage M 15-55, Elite Racing, Team Racing, Elite Racing JR, Dual Pro, Expression, Waimea, Waimea Pro

1518156090000 MY 1996 Vantage M 15-55, Elite Racing, Team Racing, Elite Racing JR, Comp Racing CST, AFD 606, AFD 906

1518157010000 MY 1997 Waimea, Kailua, same as 206376

1518157020000 MY 1997 all AFD

1518157040000 MY 1997 Expert Racing, Comp Racing, Vantage 3.0

1518150010000 MY 2000 Sonoma, Outdoor

1518151000000 MY 1999-2001 Octane DH

200520/202779 MY 2006-2007 Ransom, Nitrous, Voltage YZ- 0.5

200521/202780 MY 2006-2007 High Octane, Voltage YZ- LTD

202863 MY 2007 Scale Carbon

206375 MY 1997-2007 standard MTB dropout

206376 MY 1998-2007 standard alloy road dropout

206472 MY 2007 Addict

206473 MY 2007 Spark

206796/206819 MY 2007 Ransom / 135 mm

210004 IDS long

REPLACEMENT PARTS

29

As every year we have on the following pages a list of all articles new for 2008.

Also pls find parts numbers of MY 2007 and MY 2006.

For parts numbers from 2005 and older pls use the specific workshop folder of the different model years or in case you can not find an article in those lists pls feel free to contact

patrick.bochud@scott-sports.com
holger.klinter@scott-sports.com

for further details.

In addition we can offer you on our B2B homepage a direct view on spare parts linked to each bike.

Please follow the instructions below to get your look on parts that match to certain bikes.

HTTP://SHOP.SCOTT-SPORTS.COM

ACCESS

Access through **http://shop.scott-sports.com** with your **customer number** and **password**.

ORDER PROCESS

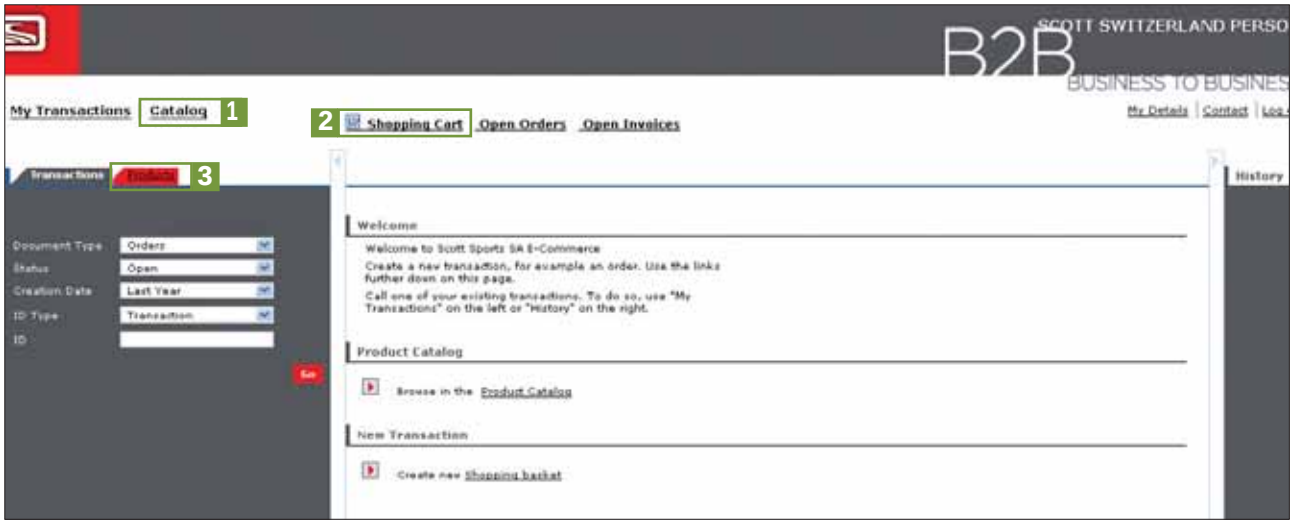

1 TO CHOOSE PRODUCTS > 3 POSSIBILITIES

1 Catalog — in the **Catalog**

2 Shopping Cart — in the **Shopping Basket** directly by using the article number

3 Products — under **Product** with article number or description

2 A > CATALOG BY MODEL

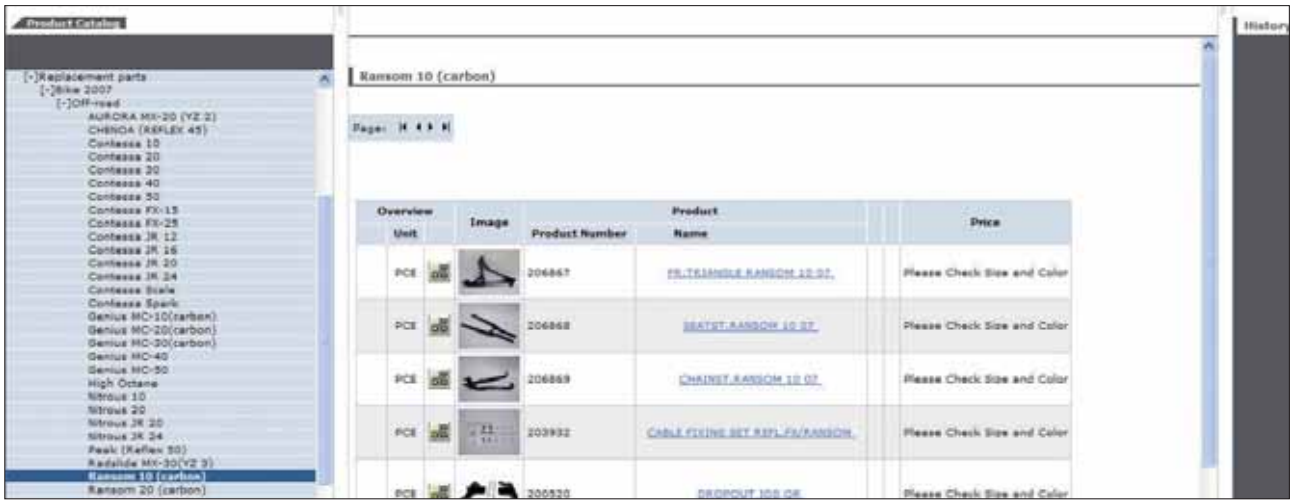

B > GENERAL CATALOG

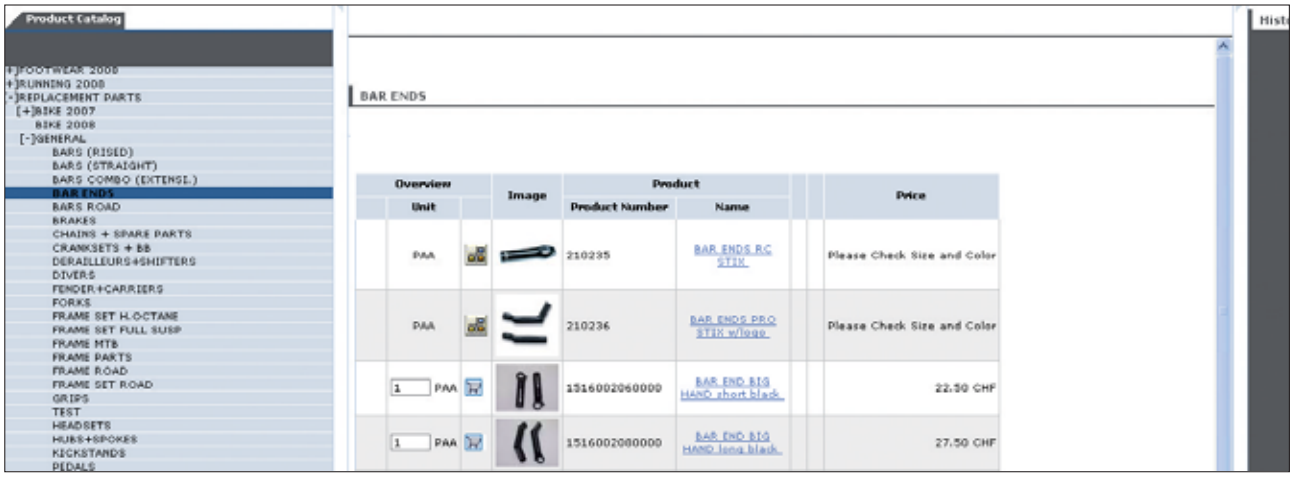

3 TO CHOOSE QUANTITY, SIZE, COLOR

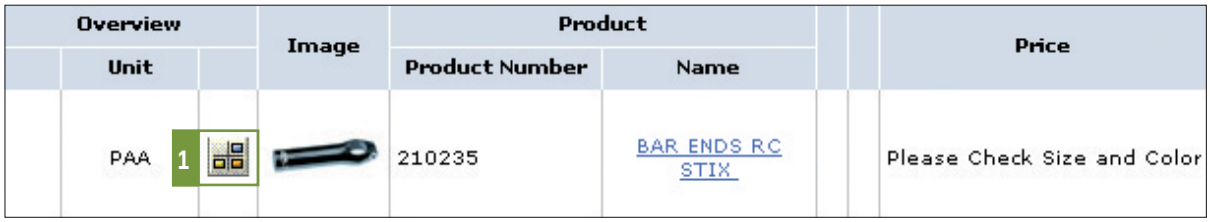

1 By clicking on , you choose the quantity per size and per color.
This indicator shows the availability of the product.

4 CHECK YOUR ORDER > BASKET

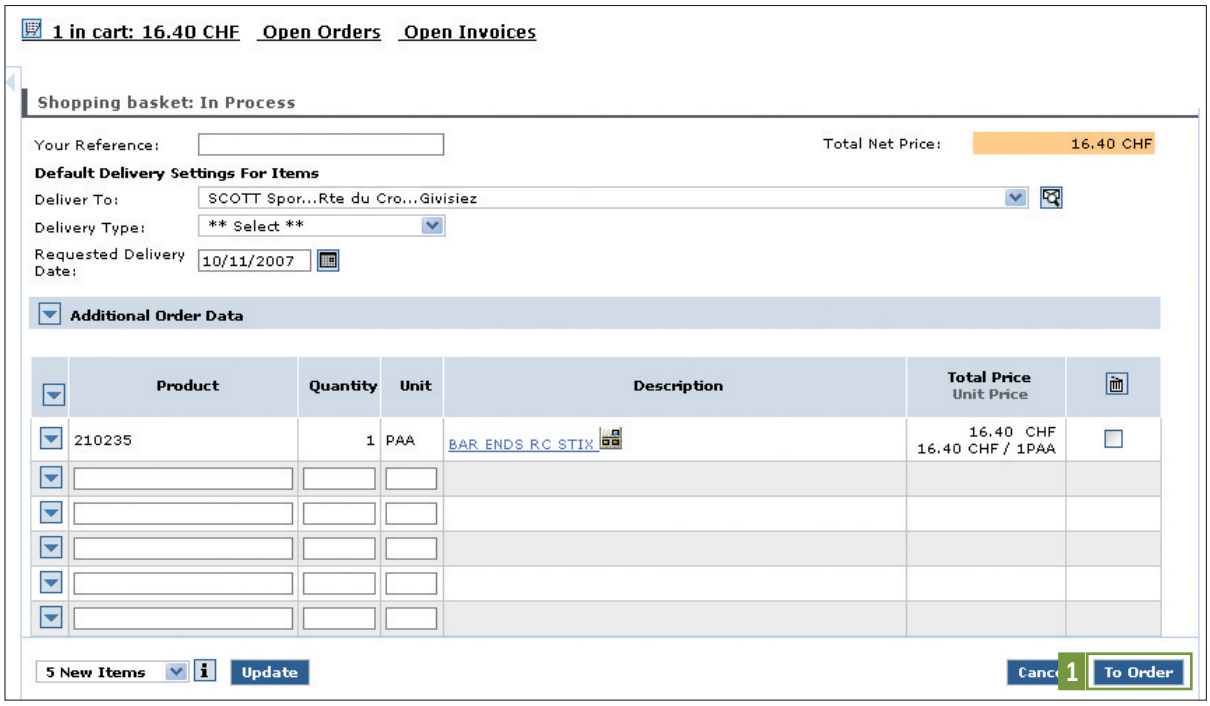

1

By clicking on **To Order**, you can check your order.

5 CONFIRM YOUR ORDER

By clicking on **Order**, you confirm your order.

TECHNICAL DATA/GEOMETRIES

30

SCOTT HELMETS

31

FUGA CONTESSA OFFROAD

209815

black

white

FUGA MAGNETO VISOR
206462

INNER PADS

FUGA SPARE KIT
kit including sizes S-M + L
black
209804

MAS SPARE KIT
one size
black
209805

KARMA OFF-ROAD

209847

black

white

KARMA VISOR
210256

INNER PADS

KARMA SPARE KIT
kit including sizes S-M + L
black
210563

MAS SPARE KIT
one size
black
209805

SPECTRE

210239

black

SPECTRE VISOR
210564

SCOTT SOFTGOODS

32

CLOTHING WARRANTIES

SCOTT BRANCHES (INCL. BENELUX)

To improve our defect analysis for clothing warranties, we adapt the procedure for clothing warranties to the bike frame warranty system.

On the following pages find our defect list with possible defects and the proper defect number, as well as some pictures and a sketch for better explanation.

SCOTT DISTRIBUTORS

No changes: use same warranty forms as used in the past.

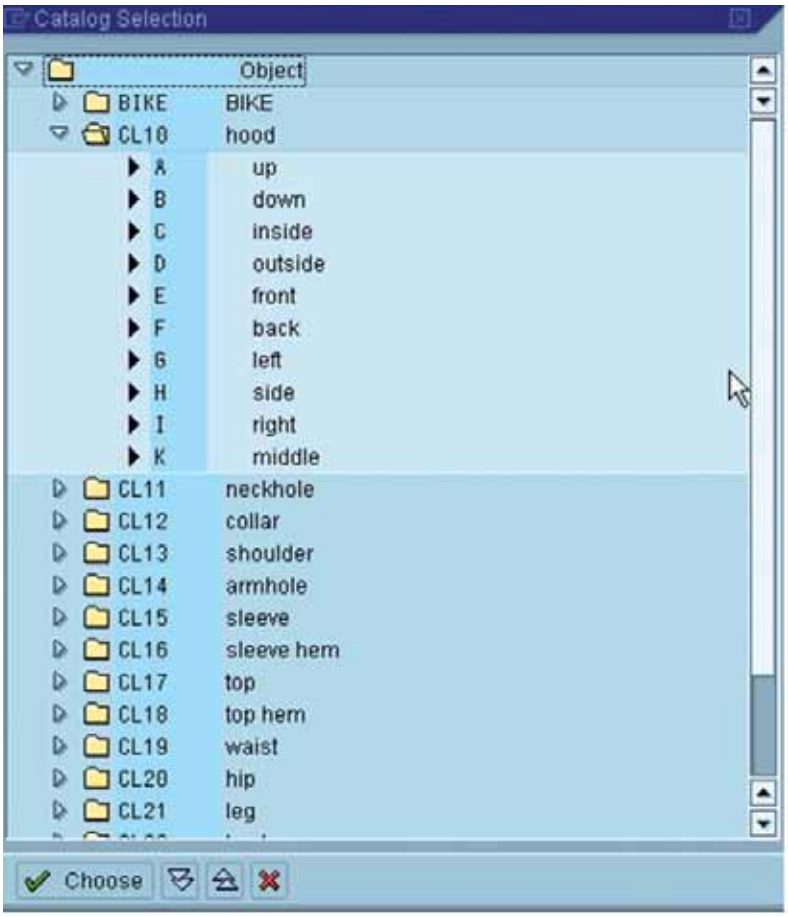
Catalog Selection
Object
BIKE BIKE
CL10 hood
A up
B down
C inside
D outside
E front
F back
G left
H side
I right
K middle
CL11 neckhole
CL12 collar
CL13 shoulder
CL14 armhole
CL15 sleeve
CL16 sleeve hem
CL17 top
CL18 top hem
CL19 waist
CL20 hip
CL21 leg
Choose

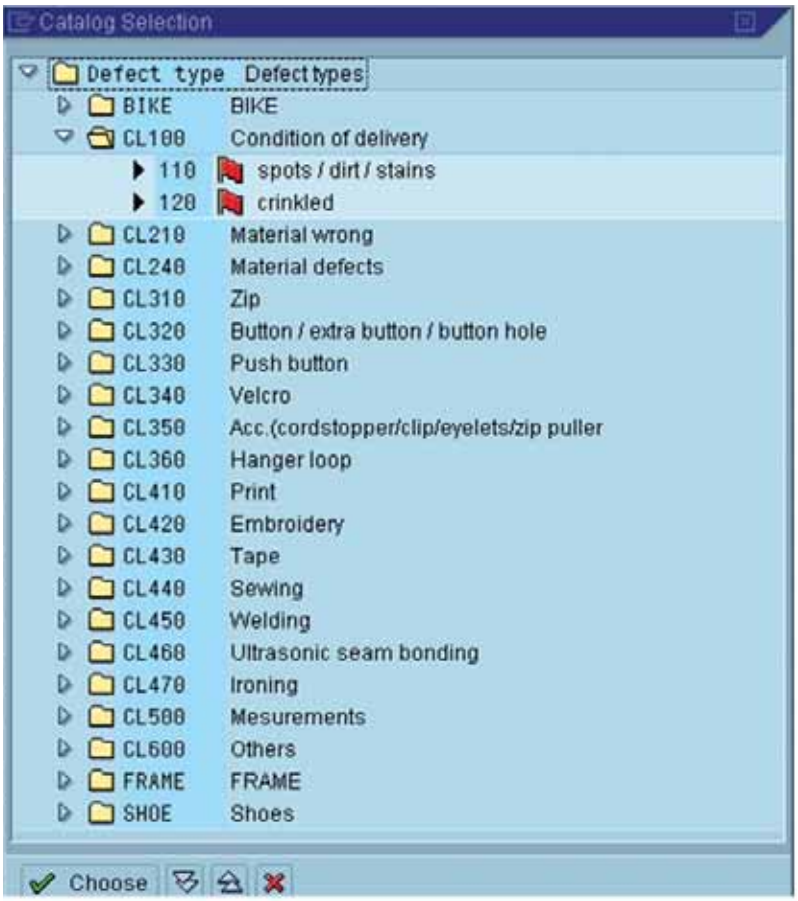
Catalog Selection
Defect type Defect types
BIKE BIKE
CL100 Condition of delivery
110 spots / dirt / stains
120 crinkled
CL210 Material wrong
CL240 Material defects
CL310 Zip
CL320 Button / extra button / button hole
CL330 Push button
CL340 Velcro
CL350 Acc.(cordstopper/clip/eyelets/zip puller
CL360 Hanger loop
CL410 Print
CL420 Embroidery
CL430 Tape
CL440 Sewing
CL450 Welding
CL460 Ultrasonic seam bonding
CL470 Ironing
CL500 Mesurements
CL600 Others
FRAME FRAME
SHOE Shoes
Choose

defect list SAP

NR.	PLACE
1	hood
2	neckhole
3	collar
4	shoulder
5	armhole
6	sleeve
7	sleeve hem
8	hem
9	waist
10	hip
11	seat seam
12	leg
13	closure
14	pocket

NR.	PLACE
a	up
b	down
c	inside
d	outside
e	front
f	back
g	left
h	side
i	right
k	middle

100	**CONDITION OF DELIVERY**
110	spots / dirt / stains
120	crinkled
130	
140	
200	**MATERIAL**
210	material wrong
220	colour shade variations within one piece
230	colour shade variations from piece to piece
240	**material defects**
241	colour inconsistent / striped material
242	yarn of fabric uneven
243	teared thread
244	broken yarn
245	hole
246	cut
247	pilling
248	colour bleading / colour fading
249	not sweatresistant
300	**TRIMMINGS / ACCESSOIRES**
310	**zip**
311	missing
312	not sewn straight
313	wavy
314	defect
315	puller tight
320	**button / extra button / button hole**
321	missing
322	position incorrect
323	damaged
324	fixation not sufficient
325	button hole too small / big
326	wavy
330	**push button**
331	missing
332	damaged
333	pulls through top layer of fabric
334	upper and lower button position not matching
335	puckering
336	press button tight
340	**velcro**
341	missing
342	colour incorrect
343	damaged
344	fixation not sufficient
350	**Accessories (cord stopper / clip / eyelets / zip puller / ...)**
351	missing
352	colour not matching
353	broken
354	damaged
360	**hanger loop**
361	missing
362	damaged
363	fixation not sufficient

400	**WORKMANSHIP**
410	**Print**
411	missing
412	wrong position
413	colour incorrect
414	printing mistake
415	print
420	**embroidery**
421	missing
422	wrong position
423	colour incorrect
424	detective
430	**tape**
431	tape gathered
440	**sewing**
441	open seam
442	uneven stitch length
443	curved / slanting seam
444	puckering
445	width of one piece not matching to the other
446	stitches without yarn
447	uncut threads
448	asymmetric
449	pattern piece shape not as specification
450	**welding**
451	open seam
452	faltige / wellige Naht
453	uneven seam allowance
454	laser cut edge not clean / fraying
455	glue visible outside
456	laser cut edge lifting
457	outer material delaminates
460	**ultrasonic seam bonding**
461	open seam
462	curved / slanting seam
463	outer material frays
470	**ironing**
471	garment not ironed
472	ironing not sufficient
473	ironing pleats
474	ironing shine
475	seared fabric
476	twisted pieces
477	untidy folding / creases
500	**MEASUREMENTS**
510	measurement discrepancies
600	**OTHERS**
610	other mistakes

liste de défauts SAP

NR.	PLACE
1	capuchon
2	encolure
3	col
4	epaule
5	emmanchure
6	manche
7	bord de manche
8	bord
9	taille
10	hanche
11	couture de l'entrejambe
12	jambe
13	fermeture
14	poche

NR.	PLACE
a	en haut
b	en bas
c	dedans
d	dehors
e	à l'avant
f	à l'arrière
g	gauche
h	latéral
i	droite
k	millieu

100	**CONDITIONS DE LIVRAISON**
110	tache
120	froissé
130	
140	
200	**MATIÈRE**
210	fausse matière
220	différence de couleur sur la même pièce
230	différence de couleur par pièce
240	**défaut de matière**
241	couleur inconsistent / matière rayé
242	largeur du fil irregulière / noeux
243	fil tiré
244	fil cassé
245	trou
246	coupé / entaille
247	pluche
248	deteint / delave
249	matière pas perspirante
300	**ACCESSOIRES**
310	**fermeture- éclair**
311	manque
312	couture de la fermeture- éclaire irregulière
313	gondole
314	cassé
315	fermeture- éclair coince
320	**bouton / bouton de remplacement / boutonnière**
321	manque
322	position incorrecte
323	abîmé
324	fixation insuffisante
325	boutonnière trop petite / grande
326	gondole
330	**bouton a pression**
331	manque
332	abîmé
333	se décroche à l'ouverture
334	endroit des boutons ne correspondent pas
335	gondole autour du bouton
336	difficulté à l'ouverture
340	**velcro**
341	manque
342	couleur incorrecte
343	abîmé
344	fixation insuffisante
350	**div. Accessories (boucle / ...)**
351	manque
352	couleur incorrecte
353	cassé
354	abîmé
360	**suspense**
361	manque
362	abîmé
363	fixation insuffisante

400	**TRAITEMENT**
410	**impression**
411	manque
412	position incorrecte
413	mauvaise couleur
414	erreur d'impression
415	impression se decolle
420	**broderie**
421	manque
422	position incorrecte
423	mauvaise couleur
424	erreur de broderie
430	**tape**
431	tape gondole
440	**couture**
441	couture ouverte
442	longeur de point irregulière
443	couture irregulière (bord/ col,...)
444	couture gondole
445	couture d'une partie ne correspond pas à la deuxième
446	trou dû à la machine a coudre
447	finition de la couture manque
448	asymétrique
449	doublure retourné
450	**welding**
451	couture ouverte
452	couture gondole
453	largeur de la finition de la couture irregulière
454	bord de laser cut effilé
455	col visible à l'extérieur
456	laser cut bord se decolle
457	matériel se delamine
460	**ultrasonic seam bonding**
461	couture ouverte
462	couture irregulière
463	matériel extérieur s'effile à la couture
470	**repassage**
471	pièce pas repassé
472	pas suffisament repassé
473	pli
474	brillant de repassage
475	repassage trop chaud
476	étirement de la pièce
477	froissé
500	**MESURE**
510	mesure ne corespond pas aux donnés transmises.
600	**DIVERS**
610	autres erreurs

Fehlerkatalog SAP

NR.	ORT
1	Kapuze
2	Halsloch
3	Kragen
4	Achsel
5	Armloch
6	Ärmel
7	Ärmelsaum
8	Saum
9	Bund
10	Hüfte
11	Leibnaht
12	Hosenbein
13	Verschluss
14	Tasche

NR.	ORT
a	oben
b	unten
c	innen
d	aussen
e	vorne
f	hinten
g	links
h	seitlich
i	rechts
k	mitte

100	**ANLIEFERZUSTAND**
110	Flecken
120	zerknittert
130	
140	
200	**MATERIAL**
210	Material falsch
220	Farbunterschiede innerhalb eines Teiles
230	Farbunterschiede von Teil zu Teil
240	**Materialfehler**
241	unruhiges Warenbild / streifiges Material
242	Dickstellen / Dünnstellen / Noppen
243	Faden gezogen
244	Fadenbruch
245	Loch
246	Schnitt
247	Pilling
248	färbt aus / bleicht aus
249	nicht schweissecht
300	**ZUTATEN / ACCESSOIRES**
310	**Reissverschluss**
311	fehlt
312	schief eingenäht
313	wellig
314	defekt
315	schwergängig
320	**Knopf / Ersatzknopf / Knopfloch**
321	fehlt
322	Position falsch
323	beschädigt
324	Fixierung ungenügend
325	Knopfloch zu klein / gross
326	wellig
330	**Druckknopf**
331	fehlt
332	beschädigt
333	reisst aus bei Betätigung
334	Ober- und Unterknopf passen nicht zusammen
335	Schrägzüge am Druckknopf
336	schwergängig
340	**Klettverschluss**
341	fehlt
342	Farbe nicht angepasst
343	beschädigt
344	Fixierung ungenügend
350	**diverse Accessoires (Kordelstopper/ Ring/ Clip/ Öse/ ...)**
351	fehlt
352	Farbe nicht angepasst
353	funktioniert nicht
354	beschädigt
360	**Aufhänger**
361	fehlt
362	beschädigt
363	ungenügend fixiert

400	**VERARBEITUNG**
410	**Drucke**
411	fehlt
412	Position abweichend von Vorgabe
413	Farbe nicht angepasst
414	Druckfehler
415	Druck löst sich
420	**Stickerei**
421	fehlt
422	Position abweichend von Vorgabe
423	Farbe nicht angepasst
424	fehlerhaft (Stichdichte, Fadenbruch etc.)
430	**Tape (Nähte / Logos)**
431	faltig / blasig
440	**Näherei**
441	offene Naht
442	Stichbild ungleichmässig
443	bogige / schiefe Naht / Abschluss (Saum, Hals, Bündchen)
444	faltige / wellige Naht
445	Weite ungleichmässig verteilt
446	Einstiche ohne Garn / Nähmaschinenabdrücke
447	Nahtversäuberung fehlt / ungenügend
448	asymmetrisch
449	Futter verdreht
450	**Welding**
451	offene Naht
452	faltige / wellige Naht
453	Nahtbreite ungleichmässig
454	unsaubere Lasercut - Kanten
455	Kleber aussen sichtbar
456	Lasercut- Kante steht ab
457	Aussenmaterial löst sich von Laminat
460	**Ultrasonic seam bonding**
461	offene Naht
462	unschöne Linienführung
463	Aussenmaterial franst bei Naht (einzelne Fäden stehen ab)
470	**Bügelei / Dämpferei**
471	Teile ungebügelt
472	Teile ungenügend gebügelt
473	Bügelfalten
474	Bügelglanz
475	versengtes Material
476	verzogene Teile
477	unordentliche Faltung, Knitter
500	**MASSE**
510	Massabweichung
600	**SONSTIGES**
610	sonstige Fehler

pictures

Nr. photo		Nr. photo	
120		441	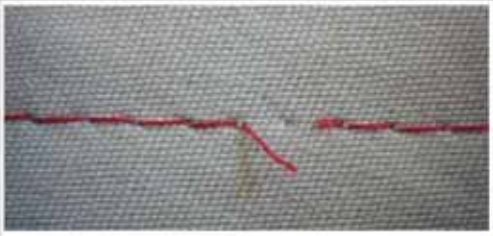
241		442	
243		443	
244		444	
247		445	
313		446	
326		447	

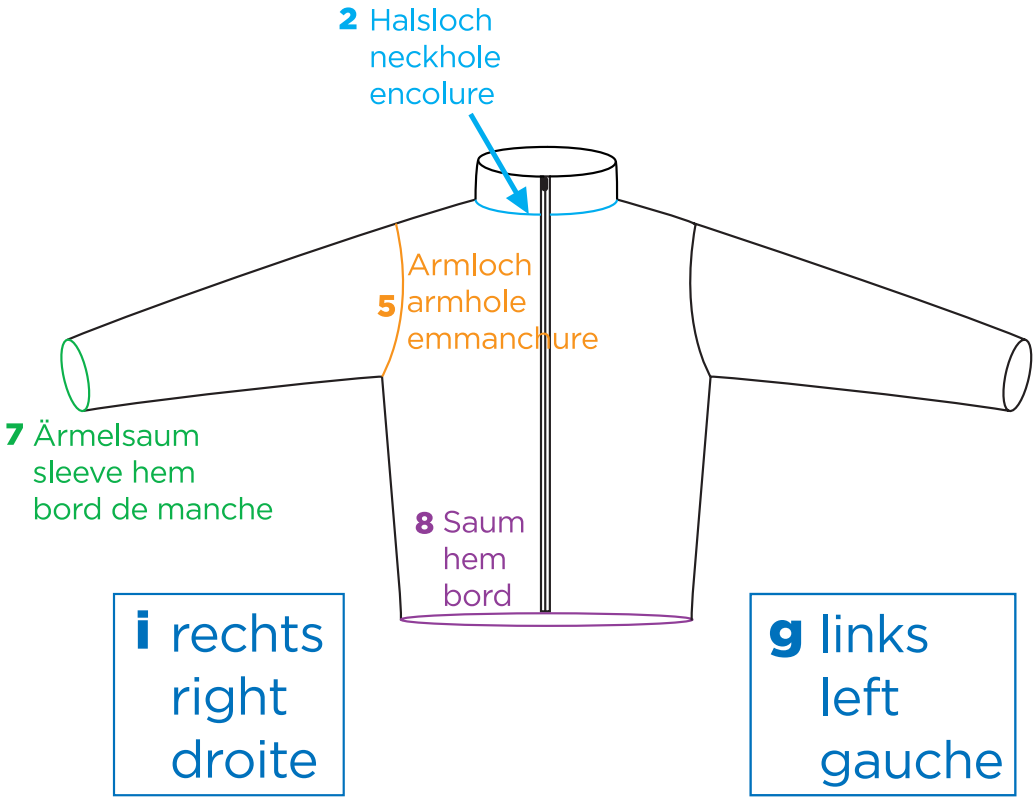
2 Halsloch
neckhole
encolure
Armloch
5 armhole
emmanchure
7 Ärmelsaum
sleeve hem
bord de manche
8 Saum
hem
bord
i rechts
right
droite
g links
left
gauche

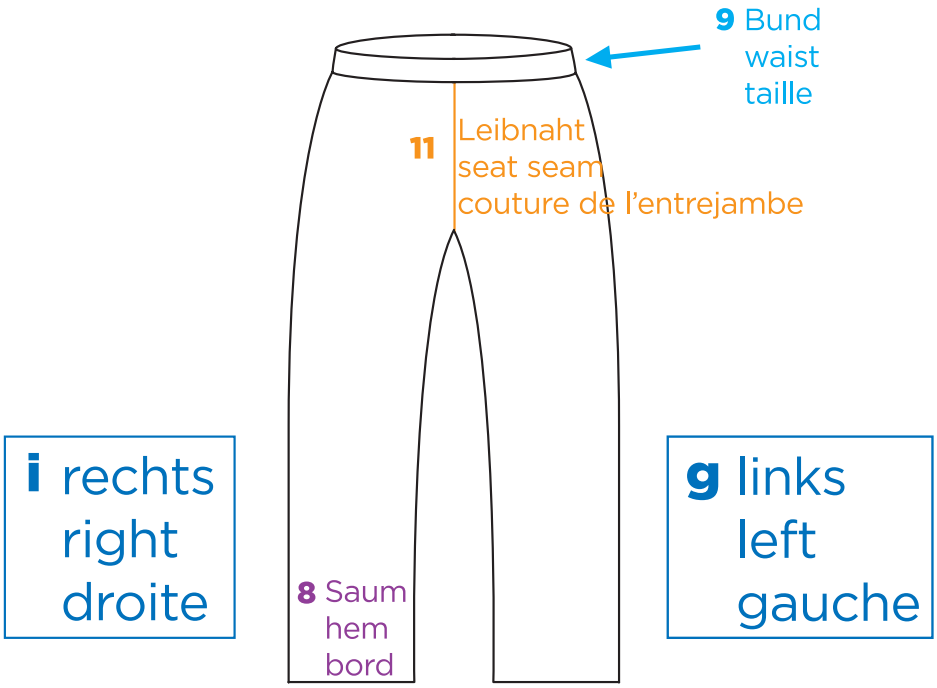
9 Bund
waist
taille
11 Leibnaht
seat seam
couture de l'entrejambe
i rechts
right
droite
g links
left
gauche
8 Saum
hem
bord

SCOTT BIKE SHOES

33

SHOE REPLACEMENT PARTS

BUCKLE REPLACEMENT KIT FOR SHOES FROM 2000 – 2006

BUCKLE KIT
15.1.200.051.0.000

BUCKLE REPLACEMENT KIT FOR SHOES FROM 2007

BUCKLE KIT BLACK
2104850001

BUCKLE KIT SILVER
2104850012

PUMA DISC SYSTEM REPLACEMENTPARTS

DISC S (38-40)
15.1.200.350.0.030

DISC L (41-46)
15.1.200.350.0.050

BOA LACE SYSTEM REPLACEMENT PARTS MODEL B
REEL AND LACE REPLACEMENT KITS FOR SHOES 2005-2006

REEL / LACE KIT
15.5.200.598.0.000

LACE KIT
15.5.200.599.0.000

Changing instruction

http://www.boatechnology.com/downloads/modelB_reel_2006.pdf

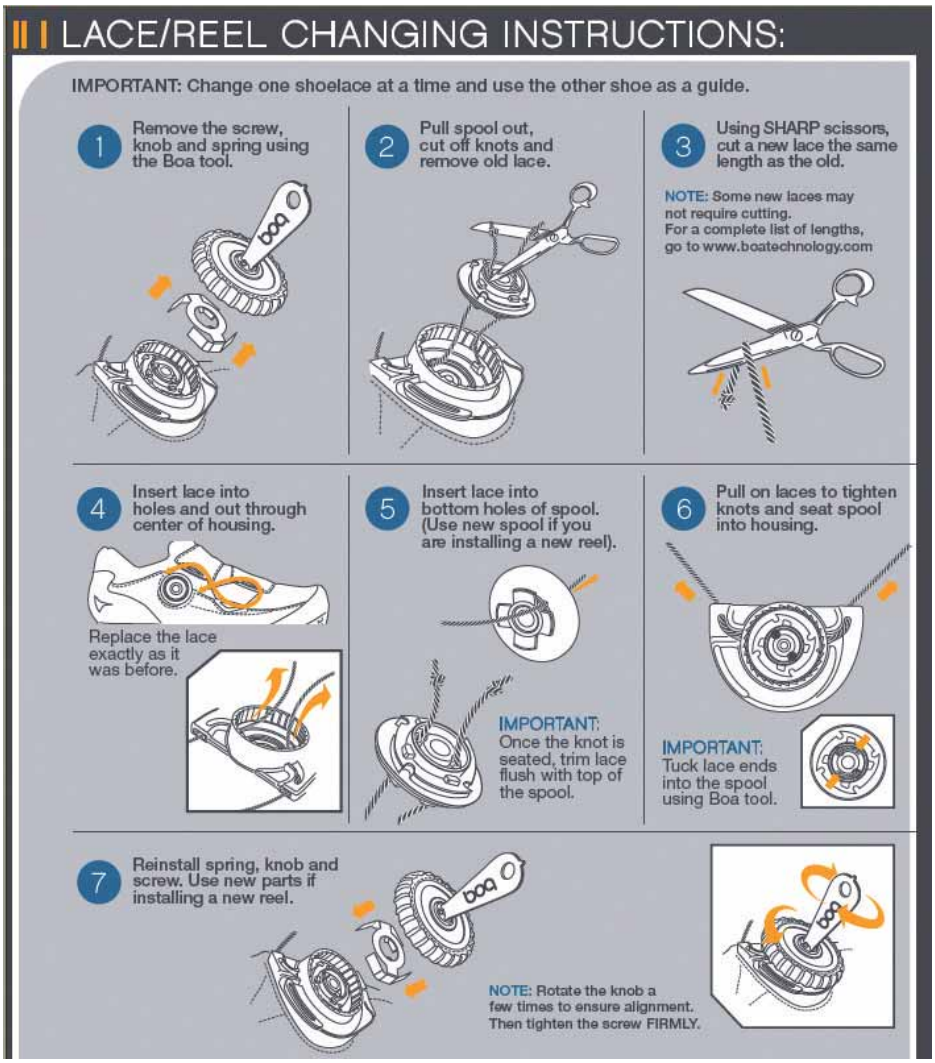

BOA LACE SYSTEM REPLACEMENT PARTS MODEL LSR
REEL AND LACE REPLACEMENT KITS FOR SHOES FROM 2007

REEL / LACE KIT
210473

LACE KIT
210474

Changing instruction

http://www.boatechnology.com/downloads/LSR_reel_2006_instructions3.pdf

> see next page

STUD REPLACEMENT KIT

STUD KIT
15.1.200.231.0.000

Changing instruction

http://www.boatechnology.com/downloads/LSR_reel_2006_instructions3.pdf

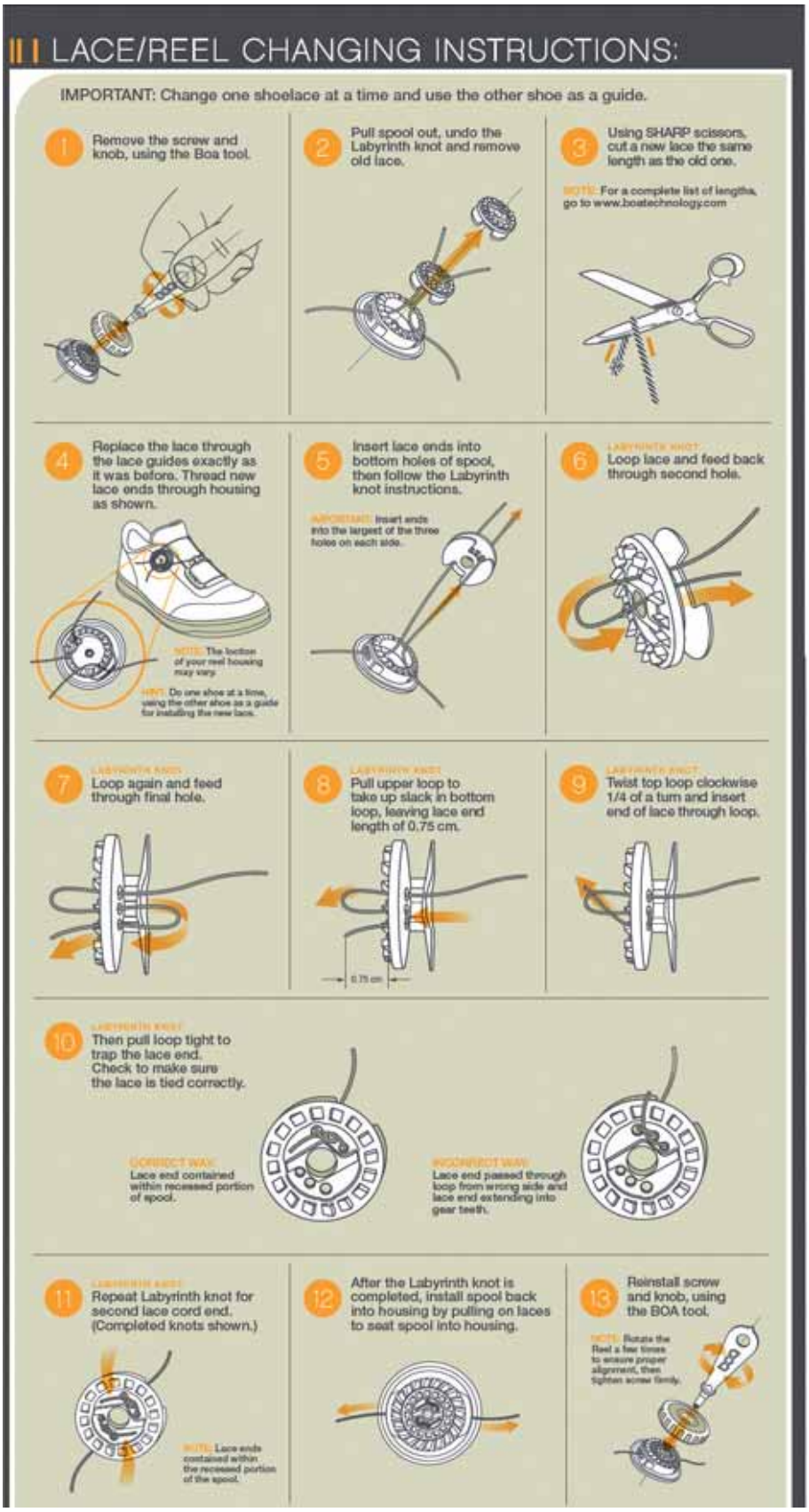

SCOTT TECH ACCESSORIES

34

PUMP REPLACEMENT PARTS

REPLACEMENT PARTS FOR FLOORPUMP COMP 160

THE PUMP HEAD
15.1.834.405.0.910

WILL BE REPLACED WHEN OUT OF STOCK BY
THE PUMP HEAD 211457

CAP / RUBBER PRESTA VALVE
PACK of 10
PIC. 15.1.834.015.0.910

CAP / RUBBER SCHRADER VALVE
PACK OF 10
15.1.834.013.0.910

REPLACEMENT PARTS FOR FLOORPUMP COMP 160 / PRO 240

PUMP HEADCOMPLETE
PACK OF 10
211457

CAP / RUBBER
10 PACK
211459

HOSE WITH CONE / CAP
PACK OF 10
518340190910