2021 BIKE
TECHBOOK

NO SHORTCUTS



DEAR DISTRIBUTORS AND COLLEAGUES,

Please take some time to familiarize yourself with our new Bike Techbook MY21 which will support you in your service work.

The SCOTT Group Quality Management Team: Moritz Scheuplein, Patrick Bochud, Stuart Sanders, Gareth Clutton, Gustav Rinne, Hampus Rinne, and Bryson Castillo, will be working with you on warranty claims, quality problems, and technical support.

Distributors please use only eu.qm@scott-sports.com for all enquiries.

Subsidiaries please write to all of us as before using the below email addresses.

moritz.scheuplein@scott-sports.com

patrick.bochud@scott-sports.com

stuart.sanders@scott-sports.com

gareth.clutton@scott-sports.com

gustav.rinne@scott-sports.com

hampus.rinne@scott-sports.com

bryson.castillo@scott-sports.com

Please do not contact the Sales team for support on warranties and spare parts.

With the help of this Techbook, we aim to offer you a fast and efficient service system, which will be an adapted version of the B2B warranty, SAP-claim procedures and service we already run in the other divisions of SCOTT Sports SA.

By using the B2B warranty online program there is no longer a need to return defective parts back to you from the dealer or from you to SCOTT Sports. This saves time and transport costs, makes each step of the claim procedure traceable, and offers you a full overview of your claim's progress and related shipment of the replacement part.

For more information on our service, please kindly refer to the following chapters of this Bike Techbook MY21. It provides a guideline and information on warranty procedures and forms, technical information, spare parts article numbers and the details of our B2B system.

For further questions or comments please feel free to contact us at any time.

We look forward to working with you.

Moritz Scheuplein

Patrick Bochud

Stuart Sanders

Gareth Clutton

Gustav Rinne

Hampus Rinne

Bryson Castillo

2021 BIKE TECHBOOK

MOUNTAIN

Gambler/Voltage Yz 0.1 04
Aspect/Contessa Active 07
Scale/Contessa Scale 12
Spark/Contessa Spark 20
Genius/Contessa Genius 32
Ransom /Contessa Ransom 37
Warranty Frames & Technical Data 40

ROAD

Foil Disc 51
Plasma 6 56
Addict RC 75
Addict Endurance/Cont. Addict 80
Addict Gravel/CX/Cont. Addict Gravel . 84
Metrix 86
Speedster/Cont. Speedster 88
Speedster Gravel/Cont. Sp. Gravel 92
Warranty Frames & Technical Data 95

e RIDE ROAD & MTB

Addict eRIDE 100
Silence eRIDE 121
Ransom eRIDE 125
Strike eRIDE/Cont. Strike eRIDE 130
Genius eRIDE/Cont. Genius eRIDE 135
Aspect eRIDE/Cont. Active eRIDE 139

e RIDE URBAN

Axis eRIDE 144
Sub Sport eRIDE 146
Sub Tour eRIDE 151
Sub Active eRIDE 154
Sub Cross eRIDE 156
Roxter eRIDE 159
Warranty Frames & Technical Data 160

URBAN/TREKKING

Sub Sport 172
Sub Comfort 174
Sub Cross 175
Warranty Frames & Technical Data 177

FUTURE PRO/JUNIOR

Ransom 600/400 181
Spark 700/600 187
Scale 700/600/400/200 188
Gravel 189
Warranty Frames & Technical Data 190

Youth/Kids 192

Replacement Parts 202

Twinloc/Rideloc 256

Replaceable Drop Outs & Cable Guides 260

Syncros Hubs & Acc 276

Wheel Book . . . . . After 276

Helmets 283

Bike Shoes 293

Battery Storage & Transport 297

Legal 301

GAMBLER & VOLTAGE YZ 0.1



GAMBLER 900 TUNED



ITEM	DESCRIPTION
282444	SCO Chainstays Gambler 900 Tuned 21
282471	SCO Seatstays Gambler 900 Tuned 21
276482	SCO Dropout and Geo chip Gambler 20
275500	SCO fork bumper w/cable port Gambler 20
276480	SCO Cableguide kit Gambler 20
275498	SCO D/T protector TPR Gambler CB 2020
275499	SCO CS/SS Protector Glue Gambler CB 20
282703	SCO Linkage bar Gambler Carbon 21
276478	SCO Swingarm rep kit Gambler 20
276479	SCO Screwset Gambler 20
276469	SCO Shock mount bolt kit Gambler 20
276470	SCO Shock mount bush set Fox Gambler 20
275468	SYN Headset ZS49/28.6 – EC49/30
275407	SYN Bar/Stem Hixon iC DH 800mm
241899	SYN Grips Pro DH, Dual Lock
276483	SCO Brake mount rear Gambler 203mm 21
223309	SCO Seatclamp 34.9mm CrMo bolt
282358	SYN Saddle Kaslo R 1.5, Channel
276481	SCO Axle rear Gambler 20
278870	SCO Hub rep kit SY Rev DH 1.5 6B F 20
271254	SCO Hub rep kit SY Revelstoke 1.5 XD R19
278393	SCO Rim SY Revelstoke 1.5 DH 20
275502	SCO Chain guide Gambler 2020
275503	SCO Bash guard Gambler 2020
276477	SCO Bashguard mounting rubber Gambler 20

GAMBLER 910



ITEM	DESCRIPTION
282445	SCO Chainstays Gambler 910 21
282472	SCO Seatstays Gambler 910 21
276482	SCO Dropout and Geo chip Gambler 20
275500	SCO fork bumper w/cable port Gambler 20
276480	SCO Cableguide kit Gambler 20
275498	SCO D/T protector TPR Gambler CB 2020
276208	SCO CS/SS Protector Glue Gambler Al 20
282702	SCO Linkage bar Gambler alloy 21
276478	SCO Swingarm rep kit Gambler 20
276479	SCO Screwset Gambler 20
276469	SCO Shock mount bolt kit Gambler 20
276470	SCO Shock mount bush set Fox Gambler 20
275468	SYN Headset ZS49/28.6 – EC49/30
275430	SYN Stem DH1.5, 31.8mm
275408	SYN H.bar Hixon1.5 DH 800mm
241899	SYN Grips Pro DH, Dual Lock
276483	SCO Brake mount rear Gambler 203mm 21
223309	SCO Seatclamp 34.9mm CrMo bolt
282358	SYN Saddle Kaslo R 1.5, Channel
276481	SCO Axle rear Gambler 20
286722	SCO Hub rep kit DHL-93 F 21
273442	BGM Hub rear Formula DHL-157
266609	SCO Rim SY/Alex MD30 32H 18
275502	SCO Chain guide Gambler 2020
275503	SCO Bash guard Gambler 2020
276477	SCO Bashguard mounting rubber Gambler 20

GAMBLER 920



ITEM	DESCRIPTION
282446	SCO Chainstays Gambler 920 21
282473	SCO Seatstays Gambler 920 21
276482	SCO Dropout and Geo chip Gambler 20
275500	SCO fork bumper w/cable port Gambler 20
276480	SCO Cableguide kit Gambler 20
276207	SCO D/T Foam protector Gambler Al 2020
276208	SCO CS/SS Protector Glue Gambler Al 20
282702	SCO Linkage bar Gambler alloy 21
276478	SCO Swingarm rep kit Gambler 20
276479	SCO Screwset Gambler 20
276469	SCO Shock mount bolt kit Gambler 20
276470	SCO Shock mount bush set Fox Gambler 20
275468	SYN Headset ZS49/28.6 – EC49/30
275430	SYN Stem DH1.5, 31.8mm
275408	SYN H.bar Hixon1.5 DH 800mm
241899	SYN Grips Pro DH, Dual Lock
276483	SCO Brake mount rear Gambler 203mm 21
223309	SCO Seatclamp 34.9mm CrMo bolt
276481	SCO Axle rear Gambler 20
286722	SCO Hub rep kit DHL-93 F 21
273442	BGM Hub rear Formula DHL-157
266609	SCO Rim SY/Alex MD30 32H 18
275502	SCO Chain guide Gambler 2020
275503	SCO Bash guard Gambler 2020
276477	SCO Bashguard mounting rubber Gambler 20

GAMBLER 930



ITEM	DESCRIPTION
282447	SCO Chainstays Gambler 930 21
282474	SCO Seatstays Gambler 930 21
276482	SCO Dropout and Geo chip Gambler 20
275500	SCO fork bumper w/cable port Gambler 20
276480	SCO Cableguide kit Gambler 20
276207	SCO D/T Foam protector Gambler Al 2020
276208	SCO CS/SS Protector Glue Gambler Al 20
282702	SCO Linkage bar Gambler alloy 21
276478	SCO Swingarm rep kit Gambler 20
276479	SCO Screwset Gambler 20
276469	SCO Shock mount bolt kit Gambler 20
276470	SCO Shock mount bush set Fox Gambler 20
277023	SCO Rear shock Gambler X-Fusion 20 Wty
275468	SYN Headset ZS49/28.6 – EC49/30
275430	SYN Stem DH1.5, 31.8mm
275408	SYN H.bar Hixon1.5 DH 800mm
241899	SYN Grips Pro DH, Dual Lock
276483	SCO Brake mount rear Gambler 203mm 21
223309	SCO Seatclamp 34.9mm CrMo bolt
276481	SCO Axle rear Gambler 20
286722	SCO Hub rep kit DHL-93 F 21
273442	BGM Hub rear Formula DHL-157
266609	SCO Rim SY/Alex MD30 32H 18
275502	SCO Chain guide Gambler 2020
275503	SCO Bash guard Gambler 2020
276477	SCO Bashguard mounting rubber Gambler 20

VOLTAGE YZ 0.1



ITEM	DESCRIPTION
215998	SCO Dropout IDS Single Speed
265586	SYN Headset ZS44/28.6 - ZS56/40
270198	SYN Stem XM1.5, 31.8mm
241899	SYN Grips Pro DH, Dual Lock
229733	SCO Seatclamp Gambler 34.9 2013
212741	SCO Seatpost Voltage Pivotal zero offset
223282	SCO Saddle Voltage Pivotal Atmosfair direct
216309	SCO Hub rep set Formula DC 42N
239310	SCO Rim Syncros MD25 Disc 26 32H
237438	SCO Bb set Voltage mid BB-18H 19mm axle
237436	SCO Crankset Voltage 0.1-2 / BMX 73/170 25T

ASPECT/CONTESSA ACTIVE



The Aspect remains the same in MY21, please double check this when ordering warranty replacements for compatibility and be sure to use old stock first where applicable.
** indicates while there is no model year the year in the description only indicates year of creation, these frames are timeless

MY 21 frames
900 Tapered headtube/PF BB/141x5mm /side swing FD;
282414 - SCO Frame Aspect 910 21 Wty
900 1 1/8th headtube / Threaded BB / 135x5mm;
282415 - SCO Frame Aspect 930 21 Wty S.Swing FD
900 1 1/8th headtube / Threaded BB / 135x5mm;
282416 - SCO Frame Aspect 950 21 Wty
700 1 1/8th headtube / Threaded BB / 135x5mm;
282417 - SCO Frame Aspect 740 21 Wty S.Swing FD
700 1 1/8th headtube / Threaded BB / 135x5mm;
282418 - SCO Frame Aspect 750 21 Wty
900 1 1/8th headtube / Threaded BB / 135x5mm;
271066 - SCO Frame Aspect 700 LTD Wty (**)
700 1 1/8th headtube / Threaded BB / 135x5mm;
271066 - SCO Frame Aspect 700 LTD 19 Wty (**)

For older frames and V brake
900 Tapered headtube/PF BB/141x5mm /side swing FD;
276336 - SCO Frame Aspect 910 20 Wty
900 1 1/8th headtube / Threaded BB / 135x5mm;
276335 - SCO Frame Aspect 930 20 Wty (Blk/ylw)
900 1 1/8th headtube / Threaded BB / 135x5mm;
276335 - SCO Frame Aspect 930 20 Wty (Grey/Red)
700 1 1/8th headtube / Threaded BB / 135x5mm;
276337 - SCO Frame Aspect 730 20 Wty (Blk/ylw)
700 1 1/8th headtube / Threaded BB / 135x5mm;
276337 - SCO Frame Aspect 730 20 Wty (Grey/red

900 Tapered headtube /PF BB /135x5mm;
271062 - SCO Frame Aspect 900 19 Wty
900 1 1/8th headtube side swing FD;
271063 - SCO Frame Aspect 910 19 Wty
700 1 1/8th headtube side swing FD;
271064 - SCO Frame Aspect 730 19 Wty
900 1 1/8th headtube V Brake;
266388 - SCO Frame Aspect 980 V/brake 18 Wty
252190 - SCO Frame Aspect 980 V/Disc bra.17

700 1 1/8th headtube V Brake;
266389- SCO Frame Aspect 780 V/brake 18 Wty
26" 1 1/8th headtube V brake;
265542 - SCO Frame Aspect 600Ltd Disc/V-br(**)

ASPECT 910



ITEM	DESCRIPTION
273561	SCO Dropout 141x5 Scale/Aspect 5-pak
265586	SYN Headset ZS44/28.6 - ZS56/40
250576	SYN Grips Comfort, Lock-On
239172	SCO Rideloc lever integ clamp
229733	SCO Seatclamp Gambler 34.9 2013
242572	SCO Seatpost Syncros 31.6 warranty
274235	SCO Axle boost QR 141x5mm (173mm)
264579	SCO Hub-rep kit Formula CL-51 front
277036	SCO Hub rep kit Form CL-2241 Shim R 20
262059	SCO Rim Syncros Alex SD20 (X20) 32H

ASPECT 920



ITEM	DESCRIPTION
273561	SCO Dropout 141x5 Scale/Aspect 5-pak
278350	SCO Cableguide BB Aspect 30/80 20
265586	SYN Headset ZS44/28.6 - ZS56/40
250576	SYN Grips Comfort, Lock-On
239172	SCO Rideloc lever integ clamp
229733	SCO Seatclamp Gambler 34.9 2013
242572	SCO Seatpost Syncros 31.6 warranty
274235	SCO Axle boost QR 141x5mm (173mm)
264579	SCO Hub-rep kit Formula CL-51 front
277036	SCO Hub rep kit Form CL-2241 Shim R 20
262059	SCO Rim Syncros Alex SD20 (X20) 32H

ASPECT 930



ITEM	DESCRIPTION
235455	SCO Fork Suntour XCR RL R 100mm Disc
273561	SCO Dropout 141x5 Scale/Aspect 5-pak
278350	SCO Cableguide BB Aspect 30/80 20
228440	SYN Headset ZS44/28.6 - ZS44/30
250576	SYN Grips Comfort, Lock-On
239172	SCO Rideloc lever integ clamp
229733	SCO Seatclamp Gambler 34.9 2013
242572	SCO Seatpost Syncros 31.6 warranty
264579	SCO Hub-rep kit Formula CL-51 front
262059	SCO Rim Syncros Alex SD20 (X20) 32H

ASPECT 940/740



ITEM	DESCRIPTION
235455	SCO Fork Suntour XCR RL R 100mm Disc
273561	SCO Dropout 141x5 Scale/Aspect 5-pak
278350	SCO Cableguide BB Aspect 30/80 20
228440	SYN Headset ZS44/28.6 - ZS44/30
250575	SYN Grips Pro
229733	SCO Seatclamp Gambler 34.9 2013
242572	SCO Seatpost Syncros 31.6 warranty
264579	SCO Hub-rep kit Formula CL-51 front
262059	SCO Rim Syncros Alex SD20 (X20) 32H

ASPECT 950/750



ITEM	DESCRIPTION
273561	SCO Dropout 141x5 Scale/Aspect 5-pak
278350	SCO Cableguide BB Aspect 30/80 20
228440	SYN Headset ZS44/28.6 - ZS44/30
250575	SYN Grips Pro
229733	SCO Seatclamp Gambler 34.9 2013
242572	SCO Seatpost Syncros 31.6 warranty
271261	SCO Hub rep kit Form DC-19 F 19
242120	SCO Hub rep kit Formula DC-25RQR
262059	SCO Rim Syncros Alex SD20 (X20) 32H

ASPECT 960/760



ITEM	DESCRIPTION
273561	SCO Dropout 141x5 Scale/Aspect 5-pak
278350	SCO Cableguide BB Aspect 30/80 20
228440	SYN Headset ZS44/28.6 - ZS44/30
250575	SYN Grips Pro
229733	SCO Seatclamp Gambler 34.9 2013
242572	SCO Seatpost Syncros 31.6 warranty
271261	SCO Hub rep kit Form DC-19 F 19
242120	SCO Hub rep kit Formula DC-25RQR
262059	SCO Rim Syncros Alex SD20 (X20) 32H

ASPECT 970/770



ITEM	DESCRIPTION
273561	SCO Dropout 141x5 Scale/Aspect 5-pak
278350	SCO Cableguide BB Aspect 30/80 20
228440	SYN Headset ZS44/28.6 - ZS44/30
250575	SYN Grips Pro
229733	SCO Seatclamp Gambler 34.9 2013
242572	SCO Seatpost Syncros 31.6 warranty
271261	SCO Hub rep kit Form DC-19 F 19
272198	BGM Hub Axlekit rear Formula DC-27
262059	SCO Rim Syncros Alex SD20 (X20) 32H

CONTESSA ACTIVE 10



ITEM	DESCRIPTION
235455	SCO Fork Suntour XCR RL R 100mm Disc
273561	SCO Dropout 141x5 Scale/Aspect 5-pak
265586	SYN Headset ZS44/28.6 - ZS56/40
250579	SYN Grips Women Comfort, Lock-On
229733	SCO Seatclamp Gambler 34.9 2013
242572	SCO Seatpost Syncros 31.6 warranty
274235	SCO Axle boost QR 141x5mm (173mm)
264579	SCO Hub-rep kit Formula CL-51 front
277036	SCO Hub rep kit Form CL-2241 Shim R 20
262059	SCO Rim Syncros Alex SD20 (X20) 32H

CONTESSA ACTIVE 20



ITEM	DESCRIPTION
235455	SCO Fork Suntour XCR RL R 100mm Disc
273561	SCO Dropout 141x5 Scale/Aspect 5-pak
228440	SYN Headset ZS44/28.6 - ZS44/30
250578	SYN Grips Women Pro
229733	SCO Seatclamp Gambler 34.9 2013
242572	SCO Seatpost Syncros 31.6 warranty
264579	SCO Hub-rep kit Formula CL-51 front
262059	SCO Rim Syncros Alex SD20 (X20) 32H

CONTESSA ACTIVE 30



ITEM	DESCRIPTION
273561	SCO Dropout 141x5 Scale/Aspect 5-pak
228440	SYN Headset ZS44/28.6 - ZS44/30
250578	SYN Grips Women Pro
229733	SCO Seatclamp Gambler 34.9 2013
242572	SCO Seatpost Syncros 31.6 warranty
262059	SCO Rim Syncros Alex SD20 (X20) 32H

CONTESSA ACTIVE 40



ITEM	DESCRIPTION
273561	SCO Dropout 141x5 Scale/Aspect 5-pak
228440	SYN Headset ZS44/28.6 - ZS44/30
250578	SYN Grips Women Pro
229733	SCO Seatclamp Gambler 34.9 2013
242572	SCO Seatpost Syncros 31.6 warranty
271261	SCO Hub rep kit Form DC-19 F 19
242120	SCO Hub rep kit Formula DC-25RQR
262059	SCO Rim Syncros Alex SD20 (X20) 32H

CONTESSA ACTIVE 50



ITEM	DESCRIPTION
273561	SCO Dropout 141x5 Scale/Aspect 5-pak
228440	SYN Headset ZS44/28.6 - ZS44/30
250578	SYN Grips Women Pro
229733	SCO Seatclamp Gambler 34.9 2013
242572	SCO Seatpost Syncros 31.6 warranty
271261	SCO Hub rep kit Form DC-19 F 19
242120	SCO Hub rep kit Formula DC-25RQR
262059	SCO Rim Syncros Alex SD20 (X20) 32H

CONTESSA ACTIVE 60



ITEM	DESCRIPTION
273561	SCO Dropout 141x5 Scale/Aspect 5-pak
228440	SYN Headset ZS44/28.6 - ZS44/30
250578	SYN Grips Women Pro
229733	SCO Seatclamp Gambler 34.9 2013
242572	SCO Seatpost Syncros 31.6 warranty
271261	SCO Hub rep kit Form DC-19 F 19
277382	BGM Hub Repkit Rear Formula DC-27A 20
262059	SCO Rim Syncros Alex SD20 (X20) 32H

SCALE/CONTESSA SCALE



For MY21 please pay attention to order the correct warranty replacement as there is a mixture of boost and non-boost frames as well as FD fixations.
For warranty replacement Scale frames please use the following- *ensure to use older frames for older bikes while available and double check compatibility in previous tech books

There may be a number of sales frames held on blocked account for anything that's not listed below

Wheel size 29 MY21 Scale

For HMX SL RC 148mm use;
274967 – Sales Frame Scale RC 900 SL HMX SL

For HMX RC 148mm use sales frame or;
282403 -SCO Frame Scale RC 900 W/C 21 Wty

For HMF RC 148mm use sales frame or;
282404- SCO Frame Scale RC 900 T.I 21 Wty
282405 -SCO Frame Scale RC 900 Team 21 Wty

For HMF 900 148 use sales frame or;
282406-SCO Frame Scale 910 21 Wty
285922-SCO Frame Scale 930 21 Wty

For alloy 148mm frames X1 use;
282407-SCO Frame Scale 950 21 Wty

For alloy QR 141x5mm use;
282408-SCO Frame Scale 970 21 Wty

For HMF 148mm Contessa use;
282409- SCO Frame Cont Scale 910 21 Wty

For alloy 148mm Contessa use;
282419- SCO Frame Cont Scale 940 21 Wty

For alloy QR 141x5mm Contessa use;
282420- SCO Frame Cont Scale 950 21 Wty

Wheel size 27.5 and 26

For Future Pro 700 use; **276349 - SCO Frame Scale 700 20 Wty**
For Future Pro 26 use; **276350- SCO Frame Scale 26 20 Wty**

Mixed !note that for these bikes size XS/S are 27.5 wheel and size M/L are 29 wheel!

For Contessa Active 10 tapered head tube/141mm **282422 SCO Frame Cont Active 10 21 Wty**
For Contessa Active 20/30 **282423 SCO Frame Cont Active 20 21 Wty**
For Contessa Active 40/50/60 **285788 SCO Frame Cont Active 40 21 Wty**

For older discontinued frames/non-boost alloy and carbon we will hold open key models, this remains the same from MY20, please consult MY20 techbook

Do not "upgrade" an older Scale 2 frame for a Scale 3 "boost" frames!

SCALE RC 900 WC AXS



ITEM	DESCRIPTION
254090	SCO Dropout hanger boost TA12-SW carb 17
266587	SCO Cableguide set Sca/Spa/Gen H-tube 18
254114	SCO Cableguide Spa/Sca17/Gen18 out
254575	SCO CSP Screw on Scale RC 900 Carbon 17
250580	SYN Headset Drop-In Scale Spark MY17
262082	SCO Headset spacers+cap Syncros 1.5 MTB
275432	SYN Comp. Mount Fraser iC
275472	SCO Stem hardware kit Fras iC, Crest iC
281130	SCO Stem spacer kit SY Fraser iC 20
270194	SYN H.bar Fraser iC SL 740mm
250574	SYN Grips Pro Lock-On
272449	SCO Rideloc lever down clamp 19
254096	SCO Brake mount Scale/Spark 12/160mm 17
223309	SCO Seatclamp 34.9mm CrMo bolt
275440	SYN Seatpost Duncan SL 10mm Offset
275441	SYN Seatpost Duncan SL 25mm Offset
275446	SYN Saddle Belcarra R 1.5, Channel
277033	SCO Axle RWS rear 148x12 boost plug T25
271254	SCO Hub rep kit SY Revelstoke 1.5 XD R19
271255	SCO Hub rep kit SY Revelstoke 1.5F 19
271288	SCO Rim SY Silverton 1.0 F 28H 19
271289	SCO Rim SY Silverton 1.0 R 28H 19
254098	SCO Chainguide Scale small 30-36T 17
273332	SCO Cable housing anti-rattle liners

SCALE RC 900 WC



ITEM	DESCRIPTION
254090	SCO Dropout hanger boost TA12-SW carb 17
266587	SCO Cableguide set Sca/Spa/Gen H-tube 18
254114	SCO Cableguide Spa/Sca17/Gen18 out
254575	SCO CSP Screw on Scale RC 900 Carbon 17
250580	SYN Headset Drop-In Scale Spark MY17
262082	SCO Headset spacers+cap Syncros 1.5 MTB
275432	SYN Comp. Mount Fraser iC
275472	SCO Stem hardware kit Fras iC, Crest iC
281130	SCO Stem spacer kit SY Fraser iC 20
270194	SYN H.bar Fraser iC SL 740mm
250574	SYN Grips Pro Lock-On
272449	SCO Rideloc lever down clamp 19
254096	SCO Brake mount Scale/Spark 12/160mm 17
223309	SCO Seatclamp 34.9mm CrMo bolt
275440	SYN Seatpost Duncan SL 10mm Offset
275441	SYN Seatpost Duncan SL 25mm Offset
275446	SYN Saddle Belcarra R 1.5, Channel
277033	SCO Axle RWS rear 148x12 boost plug T25
271254	SCO Hub rep kit SY Revelstoke 1.5 XD R19
271255	SCO Hub rep kit SY Revelstoke 1.5F 19
271288	SCO Rim SY Silverton 1.0 F 28H 19
271289	SCO Rim SY Silverton 1.0 R 28H 19
254098	SCO Chainguide Scale small 30-36T 17
273332	SCO Cable housing anti-rattle liners

SCALE RC 900 TI AXS



ITEM	DESCRIPTION
254090	SCO Dropout hanger boost TA12-SW carb 17
266587	SCO Cableguide set Sca/Spa/Gen H-tube 18
254114	SCO Cableguide Spa/Sca17/Gen18 out
254575	SCO CSP Screw on Scale RC 900 Carbon 17
250580	SYN Headset Drop-In Scale Spark MY17
262082	SCO Headset spacers+cap Syncros 1.5 MTB
250563	SYN Stem XR1.5 -8° 31.8mm
250561	SYN Computer Mount for MTB Stem XR
275403	SYN H.bar Fraser SL 740mm
250574	SYN Grips Pro Lock-On
272449	SCO Rideloc lever down clamp 19
254096	SCO Brake mount Scale/Spark 12/160mm 17
223309	SCO Seatclamp 34.9mm CrMo bolt
275442	SYN Seatpost Duncan 1.5, 10mm Offset
275443	SYN Seatpost Duncan 1.5, 25mm Offset
275446	SYN Saddle Belcarra R 1.5, Channel
277033	SCO Axle RWS rear 148x12 boost plug T25
266786	SCO Hub rep kit SY/Form XR2.0 F 6blt 18
270898	SCO Hub rep kit SY/Form XR2.5 R XD 18
266810	SCO Spoke SY/Form rep kit XR2.0 18
271303	SCO Rim SY Silverton 2.0 28H 19 Wty
254098	SCO Chainguide Scale small 30-36T 17
273332	SCO Cable housing anti-rattle liners

SCALE RC 900 TEAM



ITEM	DESCRIPTION
254090	SCO Dropout hanger boost TA12-SW carb 17
266587	SCO Cableguide set Sca/Spa/Gen H-tube 18
254114	SCO Cableguide Spa/Sca17/Gen18 out
254575	SCO CSP Screw on Scale RC 900 Carbon 17
250580	SYN Headset Drop-In Scale Spark MY17
262082	SCO Headset spacers+cap Syncros 1.5 MTB
250563	SYN Stem XR1.5 -8° 31.8mm
250561	SYN Computer Mount for MTB Stem XR
275404	SYN H.bar Fraser1.5 740mm
250574	SYN Grips Pro Lock-On
272449	SCO Rideloc lever down clamp 19
254096	SCO Brake mount Scale/Spark 12/160mm 17
223309	SCO Seatclamp 34.9mm CrMo bolt
275442	SYN Seatpost Duncan 1.5, 10mm Offset
275443	SYN Seatpost Duncan 1.5, 25mm Offset
275447	SYN Saddle Belcarra R 2.0, Channel
277033	SCO Axle RWS rear 148x12 boost plug T25
266786	SCO Hub rep kit SY/Form XR2.0 F 6blt 18
282727	SCO Hub rep kit TD-148M R M/S 21
266810	SCO Spoke SY/Form rep kit XR2.0 18
271303	SCO Rim SY Silverton 2.0 28H 19 Wty
254098	SCO Chainguide Scale small 30-36T 17
273332	SCO Cable housing anti-rattle liners

SCALE 910 AXS



ITEM	DESCRIPTION
254090	SCO Dropout hanger boost TA12-SW carb 17
266587	SCO Cableguide set Sca/Spa/Gen H-tube 18
254114	SCO Cableguide Spa/Sca17/Gen18 out
254088	SCO Front derailleur mount Scale 17
254089	SCO FD blank Spa/Sca17/Gen18
254574	SCO CSP Screw on Scale 900 Carbon 2017
250580	SYN Headset Drop-In Scale Spark MY17
262082	SCO Headset spacers+cap Syncros 1.5 MTB
250565	SYN Stem FL1.5 31.8mm
250562	SYN Computer Mount for MTB Stem FL
275404	SYN H.bar Fraser1.5 740mm
250574	SYN Grips Pro Lock-On
272449	SCO Rideloc lever down clamp 19
254096	SCO Brake mount Scale/Spark 12/160mm 17
223309	SCO Seatclamp 34.9mm CrMo bolt
275442	SYN Seatpost Duncan 1.5, 10mm Offset
275443	SYN Seatpost Duncan 1.5, 25mm Offset
275447	SYN Saddle Belcarra R 2.0, Channel
277033	SCO Axle RWS rear 148x12 boost plug T25
242437	SCO Hub-rep kit Syncros Formula CL811
242439	SCO Hub-rep kit Syncros Formula CL148S
252417	SCO Rim Syncros Alex X25 29 32H
254098	SCO Chainguide Scale small 30-36T 17
273332	SCO Cable housing anti-rattle liners

SCALE 920



ITEM	DESCRIPTION
254090	SCO Dropout hanger boost TA12-SW carb 17
266587	SCO Cableguide set Sca/Spa/Gen H-tube 18
254114	SCO Cableguide Spa/Sca17/Gen18 out
254088	SCO Front derailleur mount Scale 17
254089	SCO FD blank Spa/Sca17/Gen18
254574	SCO CSP Screw on Scale 900 Carbon 2017
250580	SYN Headset Drop-In Scale Spark MY17
262082	SCO Headset spacers+cap Syncros 1.5 MTB
250566	SYN Stem FL2.0 31.8mm
250562	SYN Computer Mount for MTB Stem FL
250574	SYN Grips Pro Lock-On
272449	SCO Rideloc lever down clamp 19
254096	SCO Brake mount Scale/Spark 12/160mm 17
229733	SCO Seatclamp 34.9mm QR Gambler
275444	SYN Seatpost Duncan 2.0, 10mm Offset
275447	SYN Saddle Belcarra R 2.0, Channel
277033	SCO Axle RWS rear 148x12 boost plug T25
242437	SCO Hub-rep kit Syncros Formula CL811
242438	SCO Hub-rep kit Syncros Formula CL14811
252417	SCO Rim Syncros Alex X25 29 32H
254098	SCO Chainguide Scale small 30-36T 17
273332	SCO Cable housing anti-rattle liners

SCALE 925



ITEM	DESCRIPTION
254090	SCO Dropout hanger boost TA12-SW carb 17
266587	SCO Cableguide set Sca/Spa/Gen H-tube 18
254114	SCO Cableguide Spa/Sca17/Gen18 out
254088	SCO Front derailleur mount Scale 17
254089	SCO FD blank Spa/Sca17/Gen18
254574	SCO CSP Screw on Scale 900 Carbon 2017
250580	SYN Headset Drop-In Scale Spark MY17
262082	SCO Headset spacers+cap Syncros 1.5 MTB
250566	SYN Stem FL2.0 31.8mm
250562	SYN Computer Mount for MTB Stem FL
250574	SYN Grips Pro Lock-On
272449	SCO Rideloc lever down clamp 19
254096	SCO Brake mount Scale/Spark 12/160mm 17
229733	SCO Seatclamp 34.9mm QR Gambler
275444	SYN Seatpost Duncan 2.0, 10mm Offset
275447	SYN Saddle Belcarra R 2.0, Channel
277033	SCO Axle RWS rear 148x12 boost plug T25
242437	SCO Hub-rep kit Syncros Formula CL811
282726	SCO Hub rep kit CL-148M R M/S 21
252417	SCO Rim Syncros Alex X25 29 32H
254098	SCO Chainguide Scale small 30-36T 17
273332	SCO Cable housing anti-rattle liners

SCALE 930



ITEM	DESCRIPTION
254090	SCO Dropout hanger boost TA12-SW carb 17
266587	SCO Cableguide set Sca/Spa/Gen H-tube 18
254114	SCO Cableguide Spa/Sca17/Gen18 out
254088	SCO Front derailleur mount Scale 17
254089	SCO FD blank Spa/Sca17/Gen18
254574	SCO CSP Screw on Scale 900 Carbon 2017
250580	SYN Headset Drop-In Scale Spark MY17
262082	SCO Headset spacers+cap Syncros 1.5 MTB
250566	SYN Stem FL2.0 31.8mm
250562	SYN Computer Mount for MTB Stem FL
250574	SYN Grips Pro Lock-On
272449	SCO Rideloc lever down clamp 19
254096	SCO Brake mount Scale/Spark 12/160mm 17
229733	SCO Seatclamp 34.9mm QR Gambler
275444	SYN Seatpost Duncan 2.0, 10mm Offset
277033	SCO Axle RWS rear 148x12 boost plug T25
242437	SCO Hub-rep kit Syncros Formula CL811
252417	SCO Rim Syncros Alex X25 29 32H
254098	SCO Chainguide Scale small 30-36T 17
273332	SCO Cable housing anti-rattle liners

SCALE 940



ITEM	DESCRIPTION
254090	SCO Dropout hanger boost TA12-SW carb 17
266587	SCO Cableguide set Sca/Spa/Gen H-tube 18
254114	SCO Cableguide Spa/Sca17/Gen18 out
254088	SCO Front derailleur mount Scale 17
254089	SCO FD blank Spa/Sca17/Gen18
254574	SCO CSP Screw on Scale 900 Carbon 2017
250580	SYN Headset Drop-In Scale Spark MY17
262082	SCO Headset spacers+cap Syncros 1.5 MTB
250566	SYN Stem FL2.0 31.8mm
250574	SYN Grips Pro Lock-On
272449	SCO Rideloc lever down clamp 19
254096	SCO Brake mount Scale/Spark 12/160mm 17
229733	SCO Seatclamp 34.9mm QR Gambler
242572	SCO Seatpost Syncros 31.6 warranty
277033	SCO Axle RWS rear 148x12 boost plug T25
242437	SCO Hub-rep kit Syncros Formula CL811
282725	SCO Hub rep kit CL-3248 R Shim 21
252417	SCO Rim Syncros Alex X25 29 32H
254098	SCO Chainguide Scale small 30-36T 17
273332	SCO Cable housing anti-rattle liners

SCALE 950



ITEM	DESCRIPTION
254092	SCO Dropout hanger boost TA12 alloy 17
266587	SCO Cableguide set Sca/Spa/Gen H-tube 18
235932	SCO CSP Pre Shape Scale 900
265586	SYN Headset ZS44/28.6 - ZS56/40
250574	SYN Grips Pro Lock-On
272449	SCO Rideloc lever down clamp 19
229733	SCO Seatclamp 34.9mm QR Gambler
242572	SCO Seatpost Syncros 31.6 warranty
275447	SYN Saddle Belcarra R 2.0, Channel
277033	SCO Axle RWS rear 148x12 boost plug T25
242437	SCO Hub-rep kit Syncros Formula CL811
282725	SCO Hub rep kit CL-3248 R Shim 21

SCALE 960



ITEM	DESCRIPTION
254092	SCO Dropout hanger boost TA12 alloy 17
235932	SCO CSP Pre Shape Scale 900
265586	SYN Headset ZS44/28.6 - ZS56/40
250575	SYN Grips Pro
239172	SCO Rideloc lever integ clamp
229733	SCO Seatclamp 34.9mm QR Gambler
242572	SCO Seatpost Syncros 31.6 warranty
277033	SCO Axle RWS rear 148x12 boost plug T25
242437	SCO Hub-rep kit Syncros Formula CL811
282725	SCO Hub rep kit CL-3248 R Shim 21
252419	SCO Jante Syncros J19S disc 29 32t

SCALE 965



ITEM	DESCRIPTION
254092	SCO Dropout hanger boost TA12 alloy 17
235932	SCO CSP Pre Shape Scale 900
265586	SYN Headset ZS44/28.6 - ZS56/40
250575	SYN Grips Pro
239172	SCO Rideloc lever integ clamp
229733	SCO Seatclamp 34.9mm QR Gambler
242572	SCO Seatpost Syncros 31.6 warranty
277033	SCO Axle RWS rear 148x12 boost plug T25
262059	SCO Rim Syncros Alex SD20 (X20) 32H

SCALE 970



ITEM	DESCRIPTION
273561	SCO Dropout 141x5 Scale/Aspect 5-pak
235932	SCO CSP Pre Shape Scale 900
265586	SYN Headset ZS44/28.6 - ZS56/40
250575	SYN Grips Pro
239172	SCO Rideloc lever integ clamp
229733	SCO Seatclamp 34.9mm QR Gambler
242572	SCO Seatpost Syncros 31.6 warranty
274235	SCO Axle boost QR 141x5mm (173mm)
264579	SCO Hub-rep kit Formula CL-51 front
277036	SCO Hub rep kit Form CL-2241 Shim R 20
262059	SCO Rim Syncros Alex SD20 (X20) 32H

SCALE 980



ITEM	DESCRIPTION
235455	SCO Fork Suntour XCR RL R 100mm Disc
273561	SCO Dropout 141x5 Scale/Aspect 5-pak
235932	SCO CSP Pre Shape Scale 900
265586	SYN Headset ZS44/28.6 - ZS56/40
250575	SYN Grips Pro
229733	SCO Seatclamp 34.9mm QR Gambler
242572	SCO Seatpost Syncros 31.6 warranty
274235	SCO Axle boost QR 141x5mm (173mm)
264579	SCO Hub-rep kit Formula CL-51 front
277036	SCO Hub rep kit Form CL-2241 Shim R 20
262059	SCO Rim Syncros Alex SD20 (X20) 32H

CONTESSA SCALE 910



ITEM	DESCRIPTION
254090	SCO Dropout hanger boost TA12-SW carb 17
266587	SCO Cableguide set Sca/Spa/Gen H-tube 18
254114	SCO Cableguide Spa/Sca17/Gen18 out
254088	SCO Front derailleur mount Scale 17
254089	SCO FD blank Spa/Sca17/Gen18
254574	SCO CSP Screw on Scale 900 Carbon 2017
250580	SYN Headset Drop-In Scale Spark MY17
262082	SCO Headset spacers+cap Syncros 1.5 MTB
250566	SYN Stem FL2.0 31.8mm
250562	SYN Computer Mount for MTB Stem FL
250577	SYN Grips Women Pro, Lock-On
272449	SCO Rideloc lever down clamp 19
254096	SCO Brake mount Scale/Spark 12/160mm 17
223309	SCO Seatclamp 34.9mm CrMo bolt
275444	SYN Seatpost Duncan 2.0, 10mm Offset
270223	SYN Saddle Savona V 2.0, Channel
277033	SCO Axle RWS rear 148x12 boost plug T25
242437	SCO Hub-rep kit Syncros Formula CL811
282726	SCO Hub rep kit CL-148M R M/S 21
252417	SCO Rim Syncros Alex X25 29 32H
254098	SCO Chainguide Scale small 30-36T 17
273332	SCO Cable housing anti-rattle liners

CONTESSA SCALE 920



ITEM	DESCRIPTION
254090	SCO Dropout hanger boost TA12-SW carb 17
266587	SCO Cableguide set Sca/Spa/Gen H-tube 18
254114	SCO Cableguide Spa/Sca17/Gen18 out
254088	SCO Front derailleur mount Scale 17
254089	SCO FD blank Spa/Sca17/Gen18
254574	SCO CSP Screw on Scale 900 Carbon 2017
250580	SYN Headset Drop-In Scale Spark MY17
262082	SCO Headset spacers+cap Syncros 1.5 MTB
250566	SYN Stem FL2.0 31.8mm
250562	SYN Computer Mount for MTB Stem FL
250577	SYN Grips Women Pro, Lock-On
272449	SCO Rideloc lever down clamp 19
254096	SCO Brake mount Scale/Spark 12/160mm 17
223309	SCO Seatclamp 34.9mm CrMo bolt
275444	SYN Seatpost Duncan 2.0, 10mm Offset
277033	SCO Axle RWS rear 148x12 boost plug T25
242437	SCO Hub-rep kit Syncros Formula CL811
252417	SCO Rim Syncros Alex X25 29 32H
254098	SCO Chainguide Scale small 30-36T 17
273332	SCO Cable housing anti-rattle liners

CONTESSA SCALE 930



ITEM	DESCRIPTION
254090	SCO Dropout hanger boost TA12-SW carb 17
266587	SCO Cableguide set Sca/Spa/Gen H-tube 18
254114	SCO Cableguide Spa/Sca17/Gen18 out
254088	SCO Front derailleur mount Scale 17
254089	SCO FD blank Spa/Sca17/Gen18
254574	SCO CSP Screw on Scale 900 Carbon 2017
250580	SYN Headset Drop-In Scale Spark MY17
262082	SCO Headset spacers+cap Syncros 1.5 MTB
250566	SYN Stem FL2.0 31.8mm
250562	SYN Computer Mount for MTB Stem FL
250577	SYN Grips Women Pro, Lock-On
272449	SCO Rideloc lever down clamp 19
254096	SCO Brake mount Scale/Spark 12/160mm 17
229733	SCO Seatclamp 34.9mm QR Gambler
242572	SCO Seatpost Syncros 31.6 warranty
277033	SCO Axle RWS rear 148x12 boost plug T25
242437	SCO Hub-rep kit Syncros Formula CL811
282725	SCO Hub rep kit CL-3248 R Shim 21
252417	SCO Rim Syncros Alex X25 29 32H
254098	SCO Chainguide Scale small 30-36T 17
273332	SCO Cable housing anti-rattle liners

CONTESSA SCALE 940



ITEM	DESCRIPTION
254092	SCO Dropout hanger boost TA12 alloy 17
266587	SCO Cableguide set Sca/Spa/Gen H-tube 18
235932	SCO CSP Pre Shape Scale 900
265586	SYN Headset ZS44/28.6 - ZS56/40
250578	SYN Grips Women Pro
239172	SCO Rideloc lever integ clamp
229733	SCO Seatclamp 34.9mm QR Gambler
242572	SCO Seatpost Syncros 31.6 warranty
277033	SCO Axle RWS rear 148x12 boost plug T25
252419	SCO Rim Syncros J19S disc 29 32H

CONTESSA SCALE 950



ITEM	DESCRIPTION
273561	SCO Dropout 141x5 Scale/Aspect 5-pak
235932	SCO CSP Pre Shape Scale 900
265586	SYN Headset ZS44/28.6 - ZS56/40
250578	SYN Grips Women Pro
229733	SCO Seatclamp 34.9mm QR Gambler
242572	SCO Seatpost Syncros 31.6 warranty
274235	SCO Q/R boost 141x5mm
264579	SCO Hub-rep kit Formula CL-51 front
277036	SCO Hub rep kit Form CL-2241 Shim R 20
252419	SCO Rim Syncros J19S disc 29 32H

SPARK/CONTESSA SPARK



SPARK RC 900 SL AXS



ITEM	DESCRIPTION
282491	SCO Swingarm Spark RC 900 SL 21
254090	SCO Dropout hanger boost TA12-SW carb 17
266587	SCO Cableguide set Sca/Spa/Gen H-tube 18
254117	SCO Cableguide Spark D/T carb/alu out 17
254114	SCO Cableguide Spa/Sca17/Gen18 out
254115	SCO Cableguide Spa17/Gen18 C-stay rub
254118	SCO Cableguide Trunnion Fox Nude 17
254576	SCO CSP Screw on Spark RC 900 Carbon 2017
282709	SCO Linkage bar Spark carbon 100mm 21
266573	SCO Igus bush set Spark/Genius/E- 18
274487	SCO Screw set Up pivots Trunnion version
262630	SCO Swingarm rep kit Spark RC 100MM 17
262044	SCO Shock mount hardware Spark 17
266000	SCO Shock mount bush set FOX Spark 17
254121	SCO Cableguide noodle Trunnion nude
282701	SCO Rear shock Spark 100mm Fox EV KSH 21
250580	SYN Headset IS42/28.6 - IS52/40
262082	SCO Headset spacers+cap Syncros 1.5 MTB
275432	SYN Comp. Mount Fraser iC
275472	SCO Stem hardware kit Fras iC, Crest iC
281130	SCO Stem spacer kit SY Fraser iC 20
270194	SYN H.bar Fraser iC SL 740mm
250574	SYN Grips Pro Lock-On
272451	SCO Twinloc lever down clamp 19
254096	SCO Brake mount Scale/Spark 12/160mm 17
223309	SCO Seatclamp 34.9mm CrMo bolt
275440	SYN Seatpost Duncan SL 10mm Offset
275441	SYN Seatpost Duncan SL 25mm Offset
275445	SYN Saddle Belcarra R 1.0, Channel
277032	SCO Axle RWS rear 148x12 boost plug T30
266798	SCO Hub rep kit Silv SL/DTXRC-XMC 1200 F
266799	SCO Hub rep kit Silv SL/DT XRC-XMC 1200R
270229	SYN Wheelset Silverton SL
254100	SCO Chainguide set Spark RC 17
273332	SCO Cable housing anti-rattle liners

SPARK RC 900 WC AXS



ITEM	DESCRIPTION
282492	SCO Swingarm Spark RC 900 W/C 21
254090	SCO Dropout hanger boost TA12-SW carb 17
266587	SCO Cableguide set Sca/Spa/Gen H-tube 18
254117	SCO Cableguide Spark D/T carb/alu out 17
254114	SCO Cableguide Spa/Sca17/Gen18 out
254115	SCO Cableguide Spa17/Gen18 C-stay rub
254118	SCO Cableguide Trunnion Fox Nude 17
254576	SCO CSP Screw on Spark RC 900 Carbon 2017
282709	SCO Linkage bar Spark carbon 100mm 21
266573	SCO Igus bush set Spark/Genius/E- 18
274487	SCO Screw set Up pivots Trunnion version
262630	SCO Swingarm rep kit Spark RC 100MM 17
262044	SCO Shock mount hardware Spark 17
278348	SCO Shock mount bush set R/S Spark 20
278724	SCO Cableguide noodle Trunnion R/S 20
278347	SCO Rear shock Spark 100mm RS RLC3 Wty
250580	SYN Headset IS42/28.6 - IS52/40
262082	SCO Headset spacers+cap Syncros 1.5 MTB
275432	SYN Comp. Mount Fraser iC
275472	SCO Stem hardware kit Fras iC, Crest iC
281130	SCO Stem spacer kit SY Fraser iC 20
270194	SYN H.bar Fraser iC SL 740mm
250574	SYN Grips Pro Lock-On
272451	SCO Twinloc lever down clamp 19
254096	SCO Brake mount Scale/Spark 12/160mm 17
223309	SCO Seatclamp 34.9mm CrMo bolt
275440	SYN Seatpost Duncan SL 10mm Offset
275441	SYN Seatpost Duncan SL 25mm Offset
275446	SYN Saddle Belcarra R 1.5, Channel
277032	SCO Axle RWS rear 148x12 boost plug T30
271255	SCO Hub rep kit SY Revelstoke 1.5F 19
271254	SCO Hub rep kit SY Revelstoke 1.5 XD R19
271288	SCO Rim SY Silverton 1.0 F 28H 19
271289	SCO Rim SY Silverton 1.0 R 28H 19
254100	SCO Chainguide set Spark RC 17
273332	SCO Cable housing anti-rattle liners

SPARK RC 900 WC



ITEM	DESCRIPTION
282492	SCO Swingarm Spark RC 900 W/C 21
254090	SCO Dropout hanger boost TA12-SW carb 17
266587	SCO Cableguide set Sca/Spa/Gen H-tube 18
254117	SCO Cableguide Spark D/T carb/alu out 17
254114	SCO Cableguide Spa/Sca17/Gen18 out
254115	SCO Cableguide Spa17/Gen18 C-stay rub
254118	SCO Cableguide Trunnion Fox Nude 17
254576	SCO CSP Screw on Spark RC 900 Carbon 2017
282709	SCO Linkage bar Spark carbon 100mm 21
266573	SCO Igus bush set Spark/Genius/E- 18
274487	SCO Screw set Up pivots Trunnion version
262630	SCO Swingarm rep kit Spark RC 100MM 17
262044	SCO Shock mount hardware Spark 17
278348	SCO Shock mount bush set R/S Spark 20
278724	SCO Cableguide noodle Trunnion R/S 20
278347	SCO Rear shock Spark 100mm RS RLC3 Wty
250580	SYN Headset IS42/28.6 - IS52/40
262082	SCO Headset spacers+cap Syncros 1.5 MTB
275432	SYN Comp. Mount Fraser iC
275472	SCO Stem hardware kit Fras iC, Crest iC
281130	SCO Stem spacer kit SY Fraser iC 20
270194	SYN H.bar Fraser iC SL 740mm
250574	SYN Grips Pro Lock-On
272451	SCO Twinloc lever down clamp 19
254096	SCO Brake mount Scale/Spark 12/160mm 17
223309	SCO Seatclamp 34.9mm CrMo bolt
275440	SYN Seatpost Duncan SL 10mm Offset
275441	SYN Seatpost Duncan SL 25mm Offset
275446	SYN Saddle Belcarra R 1.5, Channel
277032	SCO Axle RWS rear 148x12 boost plug T30
271255	SCO Hub rep kit SY Revelstoke 1.5F 19
271254	SCO Hub rep kit SY Revelstoke 1.5 XD R19
271288	SCO Rim SY Silverton 1.0 F 28H 19
271289	SCO Rim SY Silverton 1.0 R 28H 19
254100	SCO Chainguide set Spark RC 17
273332	SCO Cable housing anti-rattle liners

SPARK RC 900 PRO



ITEM	DESCRIPTION
282493	SCO Swingarm Spark RC 900 Pro 21
254090	SCO Dropout hanger boost TA12-SW carb 17
266587	SCO Cableguide set Sca/Spa/Gen H-tube 18
254117	SCO Cableguide Spark D/T carb/alu out 17
254114	SCO Cableguide Spa/Sca17/Gen18 out
254115	SCO Cableguide Spa17/Gen18 C-stay rub
254118	SCO Cableguide Trunnion Fox Nude 17
254576	SCO CSP Screw on Spark RC 900 Carbon 2017
282708	SCO Linkage bar Spark alloy 100mm 21
266573	SCO Igus bush set Spark/Genius/E- 18
274487	SCO Screw set Up pivots Trunnion version
262630	SCO Swingarm rep kit Spark RC 100MM 17
262044	SCO Shock mount hardware Spark 17
266000	SCO Shock mount bush set FOX Spark 17
254121	SCO Cableguide noodle Trunnion nude
267430	SCO Rear shock Spark 100mm Fox nude4 18
250580	SYN Headset IS42/28.6 - IS52/40
262082	SCO Headset spacers+cap Syncros 1.5 MTB
250563	SYN Stem XR1.5 -8° 31.8mm
250561	SYN Computer Mount for MTB Stem XR
262082	SCO Headset spacers+cap Syncros 1.5 MTB
275403	SYN H.bar Fraser SL 740mm
250574	SYN Grips Pro Lock-On
272451	SCO Twinloc lever down clamp 19
254096	SCO Brake mount Scale/Spark 12/160mm 17
223309	SCO Seatclamp 34.9mm CrMo bolt
275440	SYN Seatpost Duncan SL 10mm Offset
275441	SYN Seatpost Duncan SL 25mm Offset
275446	SYN Saddle Belcarra R 1.5, Channel
277032	SCO Axle RWS rear 148x12 boost plug T30
271252	SCO Hub rep kit SY Silve/Reve 1.0 F 19
278356	SCO Hub rep kit SY Silve 1.5 M/S CL R 20
278727	SCO Hub rep gear ring Form 39T MTB
272459	SCO Spoke Sy/Form rep kit Revel 2.0 19
271302	SCO Rim SY Silverton 1.5 28H 19 Wty
254100	SCO Chainguide set Spark RC 17
273332	SCO Cable housing anti-rattle liners

SPARK RC 900 TI AXS/ PRISM/CARBON



ITEM	DESCRIPTION
282494	SCO Swingarm Spark RC 900 T.I 21
254090	SCO Dropout hanger boost TA12-SW carb 17
266587	SCO Cableguide set Sca/Spa/Gen H-tube 18
254117	SCO Cableguide Spark D/T carb/alu out 17
254114	SCO Cableguide Spa/Sca17/Gen18 out
254115	SCO Cableguide Spa17/Gen18 C-stay rub
254118	SCO Cableguide Trunnion Fox Nude 17
254576	SCO CSP Screw on Spark RC 900 Carbon 2017
282708	SCO Linkage bar Spark alloy 100mm 21
266573	SCO Igus bush set Spark/Genius/E- 18
274487	SCO Screw set Up pivots Trunnion version
262630	SCO Swingarm rep kit Spark RC 100MM 17
262044	SCO Shock mount hardware Spark 17
266000	SCO Shock mount bush set FOX Spark 17
254121	SCO Cableguide noodle Trunnion nude
267430	SCO Rear shock Spark 100mm Fox nude4 18
250580	SYN Headset IS42/28.6 - IS52/40
262082	SCO Headset spacers+cap Syncros 1.5 MTB
250563	SYN Stem XR1.5 -8° 31.8mm
250561	SYN Computer Mount for MTB Stem XR
262082	SCO Headset spacers+cap Syncros 1.5 MTB
275403	SYN H.bar Fraser SL 740mm
250574	SYN Grips Pro Lock-On
272451	SCO Twinloc lever down clamp 19
254096	SCO Brake mount Scale/Spark 12/160mm 17
223309	SCO Seatclamp 34.9mm CrMo bolt
275442	SYN Seatpost Duncan 1.5, 10mm Offset
275443	SYN Seatpost Duncan 1.5, 25mm Offset
275446	SYN Saddle Belcarra R 1.5, Channel
277032	SCO Axle RWS rear 148x12 boost plug T30
266786	SCO Hub rep kit SY/Form XR2.0 F 6blt 18
270898	SCO Hub rep kit SY/Form XR2.5 R XD 18
266810	SCO Spoke SY/Form rep kit XR2.0 18
271303	SCO Rim SY Silverton 2.0 28H 19 Wty
254100	SCO Chainguide set Spark RC 17
273332	SCO Cable housing anti-rattle liners

SPARK RC 900 TEAM



ITEM	DESCRIPTION
282495	SCO Swingarm Spark RC 900 Team 21
254090	SCO Dropout hanger boost TA12-SW carb 17
266587	SCO Cableguide set Sca/Spa/Gen H-tube 18
254117	SCO Cableguide Spark D/T carb/alu out 17
254114	SCO Cableguide Spa/Sca17/Gen18 out
254115	SCO Cableguide Spa17/Gen18 C-stay rub
254118	SCO Cableguide Trunnion Fox Nude 17
254576	SCO CSP Screw on Spark RC 900 Carbon 2017
282708	SCO Linkage bar Spark alloy 100mm 21
266573	SCO Igus bush set Spark/Genius/E- 18
274487	SCO Screw set Up pivots Trunnion version
262630	SCO Swingarm rep kit Spark RC 100MM 17
262044	SCO Shock mount hardware Spark 17
266000	SCO Shock mount bush set FOX Spark 17
254121	SCO Cableguide noodle Trunnion nude
267430	SCO Rear shock Spark 100mm Fox nude4 18
250580	SYN Headset IS42/28.6 - IS52/40
262082	SCO Headset spacers+cap Syncros 1.5 MTB
250563	SYN Stem XR1.5 -8° 31.8mm
250561	SYN Computer Mount for MTB Stem XR
275404	SYN H.bar Fraser1.5 740mm
250574	SYN Grips Pro Lock-On
272451	SCO Twinloc lever down clamp 19
254096	SCO Brake mount Scale/Spark 12/160mm 17
223309	SCO Seatclamp 34.9mm CrMo bolt
275442	SYN Seatpost Duncan 1.5, 10mm Offset
275443	SYN Seatpost Duncan 1.5, 25mm Offset
275447	SYN Saddle Belcarra R 2.0, Channel
277032	SCO Axle RWS rear 148x12 boost plug T30
266786	SCO Hub rep kit SY/Form XR2.0 F 6blt 18
270898	SCO Hub rep kit SY/Form XR2.5 R XD 18
266810	SCO Spoke SY/Form rep kit XR2.0 18
271304	SCO Rim SY Silverton 2.5 28H 19 Wty
254100	SCO Chainguide set Spark RC 17
273332	SCO Cable housing anti-rattle liners

SPARK RC 900 WC COMP



ITEM	DESCRIPTION
282496	SCO Swingarm Spark RC 900 Comp 21
254090	SCO Dropout hanger boost TA12-SW carb 17
266587	SCO Cableguide set Sca/Spa/Gen H-tube 18
254117	SCO Cableguide Spark D/T carb/alu out 17
254114	SCO Cableguide Spa/Sca17/Gen18 out
254115	SCO Cableguide Spa17/Gen18 C-stay rub
254118	SCO Cableguide Trunnion Fox Nude 17
254576	SCO CSP Screw on Spark RC 900 Carbon 2017
282708	SCO Linkage bar Spark alloy 100mm 21
266573	SCO Igus bush set Spark/Genius/E- 18
274487	SCO Screw set Up pivots Trunnion version
262630	SCO Swingarm rep kit Spark RC 100MM 17
262044	SCO Shock mount hardware Spark 17
266000	SCO Shock mount bush set FOX Spark 17
254121	SCO Cableguide noodle Trunnion nude
250580	SYN Headset IS42/28.6 - IS52/40
262082	SCO Headset spacers+cap Syncros 1.5 MTB
250564	SYN Stem XR2.0 -8°, 31.8mm
250561	SYN Computer Mount for MTB Stem XR
250574	SYN Grips Pro Lock-On
272451	SCO Twinloc lever down clamp 19
254096	SCO Brake mount Scale/Spark 12/160mm 17
223309	SCO Seatclamp 34.9mm CrMo bolt
275442	SYN Seatpost Duncan 1.5, 10mm Offset
275443	SYN Seatpost Duncan 1.5, 25mm Offset
275447	SYN Saddle Belcarra R 2.0, Channel
277032	SCO Axle RWS rear 148x12 boost plug T30
242437	SCO Hub-rep kit Syncros Formula CL811
242439	SCO Hub-rep kit Syncros Formula CL148S
252417	SCO Rim Syncros Alex X25 29 32H
254100	SCO Chainguide set Spark RC 17
273332	SCO Cable housing anti-rattle liners

SPARK 900 ULTIMATE AXS



ITEM	DESCRIPTION
282501	SCO Swingarm Spark 900 Ultimate 21
254090	SCO Dropout hanger boost TA12-SW carb 17
266587	SCO Cableguide set Sca/Spa/Gen H-tube 18
254117	SCO Cableguide Spark D/T carb/alu out 17
254114	SCO Cableguide Spa/Sca17/Gen18 out
254115	SCO Cableguide Spa17/Gen18 C-stay rub
254118	SCO Cableguide Trunnion Fox Nude 17
254577	SCO CSP Screw on Spark 900 Carbon 2017
282711	SCO Linkage bar Spark carbon 120mm 21
266573	SCO Igus bush set Spark/Genius/E- 18
274487	SCO Screw set Up pivots Trunnion version
262039	SCO Swingarm rep kit Spark 120mm 17
262044	SCO Shock mount hardware Spark 17
266000	SCO Shock mount bush set FOX Spark 17
254121	SCO Cableguide noodle Trunnion nude
267428	SCO Rear shock Spark 120mm FoxNud4Ksh 18
250580	SYN Headset IS42/28.6 - IS52/40
262082	SCO Headset spacers+cap Syncros 1.5 MTB
250562	SYN Computer Mount for MTB Stem FL
250565	SYN Stem FL1.5 31.8mm
275403	SYN H.bar Fraser SL 740mm
250574	SYN Grips Pro Lock-On
272450	SCO Twinloc lever down clamp/seatpost 19
254095	SCO Brake mount Scale/Spark 12/180mm 17
223309	SCO Seatclamp 34.9mm CrMo bolt
275445	SYN Saddle Belcarra R 1.0, Channel
277032	SCO Axle RWS rear 148x12 boost plug T30
271252	SCO Hub rep kit SY Silve/Reve 1.0 F 19
271253	SCO Hub rep kit SY Silvert/Reve 1.0 R 19
271288	SCO Rim SY Silverton 1.0 F 19 Wty
271289	SCO Rim SY Silverton 1.0 R 28H 19
270230	SYN Wheelset Silverton 1.0
254101	SCO Chainguide set Spark 17
270242	SYN Trail fender 34SC
273332	SCO Cable housing anti-rattle liners

SPARK 900 AXS



ITEM	DESCRIPTION
282502	SCO Swingarm Spark 900 21
254090	SCO Dropout hanger boost TA12-SW carb 17
266587	SCO Cableguide set Sca/Spa/Gen H-tube 18
254117	SCO Cableguide Spark D/T carb/alu out 17
254114	SCO Cableguide Spa/Sca17/Gen18 out
254115	SCO Cableguide Spa17/Gen18 C-stay rub
254118	SCO Cableguide Trunnion Fox Nude 17
254089	SCO FD blank Spa/Sca17/Gen18
254087	SCO Front derailleur mount Spa17/Gen18
254577	SCO CSP Screw on Spark 900 Carbon 2017
282710	SCO Linkage bar Spark alloy 120mm 21
266573	SCO Igus bush set Spark/Genius/E- 18
274487	SCO Screw set Up pivots Trunnion version
262039	SCO Swingarm rep kit Spark 120mm 17
262044	SCO Shock mount hardware Spark 17
266000	SCO Shock mount bush set FOX Spark 17
254121	SCO Cableguide noodle Trunnion nude
267427	SCO Rear shock Spark 120mm Fox nude4 18
250580	SYN Headset IS42/28.6 - IS52/40
262082	SCO Headset spacers+cap Syncros 1.5 MTB
250562	SYN Computer Mount for MTB Stem FL
250565	SYN Stem FL1.5 31.8mm
275404	SYN H.bar Fraser1.5 740mm
250574	SYN Grips Pro Lock-On
272450	SCO Twinloc lever down clamp/seatpost 19
254095	SCO Brake mount Scale/Spark 12/180mm 17
223309	SCO Seatclamp 34.9mm CrMo bolt
275446	SYN Saddle Belcarra R 1.5, Channel
277032	SCO Axle RWS rear 148x12 boost plug T30
271252	SCO Hub rep kit SY Silve/Reve 1.0 F 19
271253	SCO Hub rep kit SY Sil/Rev 1.0 CL XD R19
271288	SCO Rim SY Silverton 1.0 F 19 Wty
271289	SCO Rim SY Silverton 1.0 R 28H 19
270230	SYN Wheelset Silverton 1.0
254101	SCO Chainguide set Spark 17
270242	SYN Trail fender 34SC
273332	SCO Cable housing anti-rattle liners

SPARK 910



ITEM	DESCRIPTION
282503	SCO Swingarm Spark 910 21
254090	SCO Dropout hanger boost TA12-SW carb 17
266587	SCO Cableguide set Sca/Spa/Gen H-tube 18
254117	SCO Cableguide Spark D/T carb/alu out 17
254114	SCO Cableguide Spa/Sca17/Gen18 out
254115	SCO Cableguide Spa17/Gen18 C-stay rub
254118	SCO Cableguide Trunnion Fox Nude 17
254089	SCO FD blank Spa/Sca17/Gen18
254087	SCO Front derailleur mount Spa17/Gen18
254577	SCO CSP Screw on Spark 900 Carbon 2017
282710	SCO Linkage bar Spark alloy 120mm 21
266573	SCO Igus bush set Spark/Genius/E- 18
274487	SCO Screw set Up pivots Trunnion version
262039	SCO Swingarm rep kit Spark 120mm 17
262044	SCO Shock mount hardware Spark 17
266000	SCO Shock mount bush set FOX Spark 17
254121	SCO Cableguide noodle Trunnion nude
267427	SCO Rear shock Spark 120mm Fox nude4 18
250580	SYN Headset IS42/28.6 - IS52/40
262082	SCO Headset spacers+cap Syncros 1.5 MTB
250562	SYN Computer Mount for MTB Stem FL
250565	SYN Stem FL1.5 31.8mm
275404	SYN H.bar Fraser1.5 740mm
250574	SYN Grips Pro Lock-On
272450	SCO Twinloc lever down clamp/seatpost 19
254095	SCO Brake mount Scale/Spark 12/180mm 17
223309	SCO Seatclamp 34.9mm CrMo bolt
275446	SYN Saddle Belcarra R 1.5, Channel
277032	SCO Axle RWS rear 148x12 boost plug T30
271252	SCO Hub rep kit SY Silve/Reve 1.0 F 19
278356	SCO Hub rep kit SY Silve 1.5 M/S CL R 20
278727	SCO Hub rep gear ring Form 39T MTB
271302	SCO Rim SY Silverton 1.5 28H 19 Wty
272459	SCO Spoke Sy/Form rep kit Revel 2.0 19
266810	SCO Spoke SY/Form rep kit XR2.0 18
254101	SCO Chainguide set Spark 17
270242	SYN Trail fender 34SC
273332	SCO Cable housing anti-rattle liners

SPARK 920



ITEM	DESCRIPTION
282504	SCO Swingarm Spark 920 21
254090	SCO Dropout hanger boost TA12-SW carb 17
266587	SCO Cableguide set Sca/Spa/Gen H-tube 18
254117	SCO Cableguide Spark D/T carb/alu out 17
254114	SCO Cableguide Spa/Sca17/Gen18 out
254115	SCO Cableguide Spa17/Gen18 C-stay rub
254118	SCO Cableguide Trunnion Fox Nude 17
254089	SCO FD blank Spa/Sca17/Gen18
254087	SCO Front derailleur mount Spa17/Gen18
254577	SCO CSP Screw on Spark 900 Carbon 2017
282710	SCO Linkage bar Spark alloy 120mm 21
266573	SCO Igus bush set Spark/Genius/E- 18
274487	SCO Screw set Up pivots Trunnion version
262039	SCO Swingarm rep kit Spark 120mm 17
262044	SCO Shock mount hardware Spark 17
266000	SCO Shock mount bush set FOX Spark 17
254121	SCO Cableguide noodle Trunnion nude
267427	SCO Rear shock Spark 120mm Fox nude4 18
250580	SYN Headset IS42/28.6 - IS52/40
262082	SCO Headset spacers+cap Syncros 1.5 MTB
250562	SYN Computer Mount for MTB Stem FL
250565	SYN Stem FL1.5 31.8mm
275404	SYN H.bar Fraser1.5 740mm
250574	SYN Grips Pro Lock-On
272450	SCO Twinloc lever down clamp/seatpost 19
254095	SCO Brake mount Scale/Spark 12/180mm 17
223309	SCO Seatclamp 34.9mm CrMo bolt
263443	SYN Seatpost Duncan Dropper 2.0 125mm
278397	SCO Seatpost-Serv Air cartkit Duncan 2.0
278399	SCO Seatpost-Serv.seal kit Duncan 2.0
275447	SYN Saddle Belcarra R 2.0, Channel
277032	SCO Axle RWS rear 148x12 boost plug T30
266786	SCO Hub rep kit SY/Form XR2.0 F 6blt 18
270898	SCO Hub rep kit SY/Form XR2.5 R XD 18
266810	SCO Spoke SY/Form rep kit XR2.0 18
271304	SCO Rim SY Silverton 2.5 28H 19 Wty
254101	SCO Chainguide set Spark 17
270242	SYN Trail fender 34SC
273332	SCO Cable housing anti-rattle liners

SPARK 930



ITEM	DESCRIPTION
282505	SCO Swingarm Spark 930 21
254090	SCO Dropout hanger boost TA12-SW carb 17
266587	SCO Cableguide set Sca/Spa/Gen H-tube 18
254117	SCO Cableguide Spark D/T carb/alu out 17
254114	SCO Cableguide Spa/Sca17/Gen18 out
254115	SCO Cableguide Spa17/Gen18 C-stay rub
254118	SCO Cableguide Trunnion Fox Nude 17
254089	SCO FD blank Spa/Sca17/Gen18
254087	SCO Front derailleur mount Spa17/Gen18
254577	SCO CSP Screw on Spark 900 Carbon 2017
282710	SCO Linkage bar Spark alloy 120mm 21
266573	SCO Igus bush set Spark/Genius/E- 18
274487	SCO Screw set Up pivots Trunnion version
262039	SCO Swingarm rep kit Spark 120mm 17
262044	SCO Shock mount hardware Spark 17
266000	SCO Shock mount bush set FOX Spark 17
254121	SCO Cableguide noodle Trunnion nude
267427	SCO Rear shock Spark 120mm Fox nude4 18
250580	SYN Headset IS42/28.6 - IS52/40
262082	SCO Headset spacers+cap Syncros 1.5 MTB
250562	SYN Computer Mount for MTB Stem FL
250566	SYN Stem FL2.0 31.8mm
250574	SYN Grips Pro Lock-On
272450	SCO Twinloc lever down clamp/seatpost 19
254095	SCO Brake mount Scale/Spark 12/180mm 17
223309	SCO Seatclamp 34.9mm CrMo bolt
263443	SYN Seatpost Duncan Dropper 2.0 125mm
278397	SCO Seatpost-Serv Air cartkit Duncan 2.0
278399	SCO Seatpost-Serv.seal kit Duncan 2.0
275447	SYN Saddle Belcarra R 2.0, Channel
277032	SCO Axle RWS rear 148x12 boost plug T30
242437	SCO Hub-rep kit Syncros Formula CL811
282726	SCO Hub rep kit CL-148M R M/S 21
252417	SCO Rim Syncros Alex X25 29 32H
254101	SCO Chainguide set Spark 17
273332	SCO Cable housing anti-rattle liners

SPARK 940



ITEM	DESCRIPTION
285793	SCO Swingarm Spark 940 21
254090	SCO Dropout hanger boost TA12-SW carb 17
266587	SCO Cableguide set Sca/Spa/Gen H-tube 18
254117	SCO Cableguide Spark D/T carb/alu out 17
254114	SCO Cableguide Spa/Sca17/Gen18 out
254115	SCO Cableguide Spa17/Gen18 C-stay rub
254118	SCO Cableguide Trunnion Fox Nude 17
254089	SCO FD blank Spa/Sca17/Gen18
254087	SCO Front derailleur mount Spa17/Gen18
254577	SCO CSP Screw on Spark 900 Carbon 2017
282710	SCO Linkage bar Spark alloy 120mm 21
266573	SCO Igus bush set Spark/Genius/E- 18
274487	SCO Screw set Up pivots Trunnion version
262039	SCO Swingarm rep kit Spark 120mm 17
262044	SCO Shock mount hardware Spark 17
266000	SCO Shock mount bush set FOX Spark 17
254122	SCO Cableguide noodle Trunnion Float 17
263379	SCO Rear Shock Spark 120mm FoxFltPerf 17
250580	SYN Headset IS42/28.6 - IS52/40
262082	SCO Headset spacers+cap Syncros 1.5 MTB
250562	SYN Computer Mount for MTB Stem FL
250566	SYN Stem FL2.0 31.8mm
250574	SYN Grips Pro Lock-On
272450	SCO Twinloc lever down clamp/seatpost 19
254095	SCO Brake mount Scale/Spark 12/180mm 17
223309	SCO Seatclamp 34.9mm CrMo bolt
263443	SYN Seatpost Duncan Dropper 2.0 125mm
278397	SCO Seatpost-Serv Air cartkit Duncan 2.0
278399	SCO Seatpost-Serv.seal kit Duncan 2.0
277032	SCO Axle RWS rear 148x12 boost plug T30
242437	SCO Hub-rep kit Syncros Formula CL811
242439	SCO Hub-rep kit Syncros Formula CL148S
252417	SCO Rim Syncros Alex X25 29 32H
254101	SCO Chainguide set Spark 17
273332	SCO Cable housing anti-rattle liners

SPARK 950



ITEM	DESCRIPTION
254092	SCO Dropout hanger boost TA12 alloy 17
266587	SCO Cableguide set Sca/Spa/Gen H-tube 18
254117	SCO Cableguide Spark D/T carb/alu out 17
254114	SCO Cableguide Spa/Sca17/Gen18 out
254115	SCO Cableguide Spa17/Gen18 C-stay rub
254119	SCO Cableguide Trunnion Fox Float
254089	SCO FD blank Spa/Sca17/Gen18
254087	SCO Front derailleur mount Spa17/Gen18
254578	SCO CSP Screw on Spark 900 Alloy 2017
267285	SCO Linkage bar Spark alloy 120mm 18
266573	SCO Igus bush set Spark/Genius/E- 18
274487	SCO Screw set Up pivots Trunnion version
262039	SCO Swingarm rep kit Spark 120mm 17
262044	SCO Shock mount hardware Spark 17
266000	SCO Shock mount bush set FOX Spark 17
254122	SCO Cableguide noodle Trunnion Float 17
263379	SCO Rear Shock Spark 120mm FoxFltPerf 17
228441	SYN Headset ZS44/28.6 - ZS55/40
250566	SYN Stem FL2.0 31.8mm
250562	SYN Computer Mount for MTB Stem FL
250574	SYN Grips Pro Lock-On
272450	SCO Twinloc lever down clamp/seatpost 19
254095	SCO Brake mount Scale/Spark 12/180mm 17
223309	SCO Seatclamp 34.9mm CrMo bolt
263443	SYN Seatpost Duncan Dropper 2.0 125mm
278397	SCO Seatpost-Serv Air cartkit Duncan 2.0
278399	SCO Seatpost-Serv.seal kit Duncan 2.0
277032	SCO Axle RWS rear 148x12 boost plug T30
242437	SCO Hub-rep kit Syncros Formula CL811
242439	SCO Hub-rep kit Syncros Formula CL148S
252417	SCO Rim Syncros Alex X25 29 32H
254101	SCO Chainguide set Spark 17

SPARK 960



ITEM	DESCRIPTION
254092	SCO Dropout hanger boost TA12 alloy 17
266587	SCO Cableguide set Sca/Spa/Gen H-tube 18
254117	SCO Cableguide Spark D/T carb/alu out 17
254114	SCO Cableguide Spa/Sca17/Gen18 out
254115	SCO Cableguide Spa17/Gen18 C-stay rub
254119	SCO Cableguide Trunnion Fox Float
254089	SCO FD blank Spa/Sca17/Gen18
254087	SCO Front derailleur mount Spa17/Gen18
254578	SCO CSP Screw on Spark 900 Alloy 2017
267285	SCO Linkage bar Spark alloy 120mm 18
266573	SCO Igus bush set Spark/Genius/E- 18
274487	SCO Screw set Up pivots Trunnion version
262039	SCO Swingarm rep kit Spark 120mm 17
262044	SCO Shock mount hardware Spark 17
266001	SCO Shock mount bush set X-Fus. Spark 17
254121	SCO Cableguide noodle Trunnion nude
254201	SCO Rear Shock Spark 120mm X-Fusion 17
228441	SYN Headset ZS44/28.6 - ZS55/40
250574	SYN Grips Pro Lock-On
272450	SCO Twinloc lever down clamp/seatpost 19
254095	SCO Brake mount Scale/Spark 12/180mm 17
223309	SCO Seatclamp 34.9mm CrMo bolt
278396	SCO Seatpost-Serv Air cartkit Duncan 2.5
278398	SCO Seatpost-Serv.seal kit Duncan 2.5
277032	SCO Axle RWS rear 148x12 boost plug T30
252417	SCO Rim Syncros Alex X25 29 32H

SPARK 970



ITEM	DESCRIPTION
254094	SCO Dropout Hanger boost Q/R no DM 17
266587	SCO Cableguide set Sca/Spa/Gen H-tube 18
254117	SCO Cableguide Spark D/T carb/alu out 17
254114	SCO Cableguide Spa/Sca17/Gen18 out
254115	SCO Cableguide Spa17/Gen18 C-stay rub
254119	SCO Cableguide Trunnion Fox Float
254089	SCO FD blank Spa/Sca17/Gen18
254087	SCO Front derailleur mount Spa17/Gen18
254578	SCO CSP Screw on Spark 900 Alloy 2017
267285	SCO Linkage bar Spark alloy 120mm 18
266573	SCO Igus bush set Spark/Genius/E- 18
274487	SCO Screw set Up pivots Trunnion version
262039	SCO Swingarm rep kit Spark 120mm 17
262044	SCO Shock mount hardware Spark 17
266001	SCO Shock mount bush set X-Fus. Spark 17
254121	SCO Cableguide noodle Trunnion nude
254201	SCO Rear Shock Spark 120mm X-Fusion 17
228441	SYN Headset ZS44/28.6 - ZS55/40
250574	SYN Grips Pro Lock-On
272450	SCO Twinloc lever down clamp/seatpost 19
254097	SCO Brake mount Scale/Spark QR/180mm 17
223309	SCO Seatclamp 34.9mm CrMo bolt
278396	SCO Seatpost-Serv Air cartkit Duncan 2.5
278398	SCO Seatpost-Serv.seal kit Duncan 2.5
274235	SCO Axle Boost QR 141x5mm (173mm)
242437	SCO Hub-rep kit Syncros Formula CL811
277036	SCO Hub rep kit Form CL-2241 Shim R 20
252417	SCO Rim Syncros Alex X25 29 32H

CONTESSA SPARK RC 900 WC



ITEM	DESCRIPTION
282497	SCO Swingarm Cont Spark RC W/C 21
254090	SCO Dropout hanger boost TA12-SW carb 17
266587	SCO Cableguide set Sca/Spa/Gen H-tube 18
254117	SCO Cableguide Spark D/T carb/alu out 17
254114	SCO Cableguide Spa/Sca17/Gen18 out
254115	SCO Cableguide Spa17/Gen18 C-stay rub
254118	SCO Cableguide Trunnion Fox Nude 17
254576	SCO CSP Screw on Spark RC 900 Carbon 2017
267284	SCO Linkage bar Spark alloy 100mm 18
266573	SCO Igus bush set Spark/Genius/E- 18
274487	SCO Screw set Up pivots Trunnion version
262630	SCO Swingarm rep kit Spark RC 100MM 17
262044	SCO Shock mount hardware Spark 17
266000	SCO Shock mount bush set FOX Spark 17
254121	SCO Cableguide noodle Trunnion nude
278347	SCO Rear shock Spark 100mm RS RLC3 Wty
250580	SYN Headset IS42/28.6 - IS52/40
262082	SCO Headset spacers+cap Syncros 1.5 MTB
275432	SYN Comp. Mount Fraser iC
275472	SCO Stem hardware kit Fras iC, Crest iC
281130	SCO Stem spacer kit SY Fraser iC 20
270194	SYN H.bar Fraser iC SL 740mm
250577	SYN Grips Women Pro Lock-On
272451	SCO Twinloc lever down clamp 19
254096	SCO Brake mount Scale/Spark 12/160mm 17
223309	SCO Seatclamp 34.9mm CrMo bolt
275440	SYN Seatpost Duncan SL 10mm Offset
275441	SYN Seatpost Duncan SL 25mm Offset
275452	SYN Saddle Celista R 1.5, Channel
277032	SCO Axle RWS rear 148x12 boost plug T30
271255	SCO Hub rep kit SY Revelstoke 1.5F 19
271254	SCO Hub rep kit SY Revelstoke 1.5 XD R19
271288	SCO Rim SY Silverton 1.0 F 28H 19
271289	SCO Rim SY Silverton 1.0 R 28H 19
254100	SCO Chainguide set Spark RC 17
273332	SCO Cable housing anti-rattle liners

CONTESSA SPARK RC 900 COMP



ITEM	DESCRIPTION
282498	SCO Swingarm Cont Spark RC Comp 21
254090	SCO Dropout hanger boost TA12-SW carb 17
266587	SCO Cableguide set Sca/Spa/Gen H-tube 18
254117	SCO Cableguide Spark D/T carb/alu out 17
254114	SCO Cableguide Spa/Sca17/Gen18 out
254115	SCO Cableguide Spa17/Gen18 C-stay rub
254118	SCO Cableguide Trunnion Fox Nude 17
254576	SCO CSP Screw on Spark RC 900 Carbon 2017
267284	SCO Linkage bar Spark alloy 100mm 18
266573	SCO Igus bush set Spark/Genius/E- 18
274487	SCO Screw set Up pivots Trunnion version
262630	SCO Swingarm rep kit Spark RC 100MM 17
262044	SCO Shock mount hardware Spark 17
266000	SCO Shock mount bush set FOX Spark 17
254121	SCO Cableguide noodle Trunnion nude
250580	SYN Headset IS42/28.6 - IS52/40
262082	SCO Headset spacers+cap Syncros 1.5 MTB
275432	SYN Comp. Mount Fraser iC
262082	SCO Headset spacers+cap Syncros 1.5 MTB
250564	SYN Stem XR2.0 -8°, 31.8mm
250577	SYN Grips Women Pro Lock-On
272451	SCO Twinloc lever down clamp 19
254096	SCO Brake mount Scale/Spark 12/160mm 17
223309	SCO Seatclamp 34.9mm CrMo bolt
275444	SYN Seatpost Duncan 2.0, 10mm Offset
275454	SYN Saddle Celista R 2.0, Channel
277032	SCO Axle RWS rear 148x12 boost plug T30
242437	SCO Hub-rep kit Syncros Formula CL811
242439	SCO Hub-rep kit Syncros Formula CL148S
252417	SCO Rim Syncros Alex X25 29 32H
254100	SCO Chainguide set Spark RC 17
273332	SCO Cable housing anti-rattle liners

CONTESSA SPARK 910



ITEM	DESCRIPTION
282499	SCO Swingarm Cont Spark 910 21
254090	SCO Dropout hanger boost TA12-SW carb 17
266587	SCO Cableguide set Sca/Spa/Gen H-tube 18
254117	SCO Cableguide Spark D/T carb/alu out 17
254114	SCO Cableguide Spa/Sca17/Gen18 out
254115	SCO Cableguide Spa17/Gen18 C-stay rub
254118	SCO Cableguide Trunnion Fox Nude 17
254089	SCO FD blank Spa/Sca17/Gen18
254087	SCO Front derailleur mount Spa17/Gen18
254577	SCO CSP Screw on Spark 900 Carbon 2017
267285	SCO Linkage bar Spark alloy 120mm 18
266573	SCO Igus bush set Spark/Genius/E- 18
274487	SCO Screw set Up pivots Trunnion version
262039	SCO Swingarm rep kit Spark 120mm 17
262044	SCO Shock mount hardware Spark 17
266000	SCO Shock mount bush set FOX Spark 17
254121	SCO Cableguide noodle Trunnion nude
267427	SCO Rear shock Spark 120mm Fox nude4 18
250580	SYN Headset IS42/28.6 - IS52/40
262082	SCO Headset spacers+cap Syncros 1.5 MTB
250562	SYN Computer Mount for MTB Stem FL
250565	SYN Stem FL1.5 31.8mm
275404	SYN H.bar Fraser1.5 740mm
250577	SYN Grips Women Pro Lock-On
272450	SCO Twinloc lever down clamp/seatpost 19
254095	SCO Brake mount Scale/Spark 12/180mm 17
223309	SCO Seatclamp 34.9mm CrMo bolt
263443	SYN Seatpost Duncan Dropper 2.0 125mm
278397	SCO Seatpost-Serv Air cartkit Duncan 2.0
278399	SCO Seatpost-Serv.seal kit Duncan 2.0
275454	SYN Saddle Celista R 2.0, Channel
277032	SCO Axle RWS rear 148x12 boost plug T30
266786	SCO Hub rep kit SY/Form XR2.0 F 6blt 18
270898	SCO Hub rep kit SY/Form XR2.5 R XD 18
266810	SCO Spoke SY/Form rep kit XR2.0 18
271304	SCO Rim SY Silverton 2.5 28H 19 Wty
254101	SCO Chainguide set Spark 17
273332	SCO Cable housing anti-rattle liners

CONTESSA SPARK 920



ITEM	DESCRIPTION
282500	SCO Swingarm Cont Spark 920 21
254090	SCO Dropout hanger boost TA12-SW carb 17
266587	SCO Cableguide set Sca/Spa/Gen H-tube 18
254117	SCO Cableguide Spark D/T carb/alu out 17
254114	SCO Cableguide Spa/Sca17/Gen18 out
254115	SCO Cableguide Spa17/Gen18 C-stay rub
254119	SCO Cableguide Trunnion Fox Float
254089	SCO FD blank Spa/Sca17/Gen18
254087	SCO Front derailleur mount Spa17/Gen18
254577	SCO CSP Screw on Spark 900 Carbon 2017
267285	SCO Linkage bar Spark alloy 120mm 18
266573	SCO Igus bush set Spark/Genius/E- 18
274487	SCO Screw set Up pivots Trunnion version
262039	SCO Swingarm rep kit Spark 120mm 17
262044	SCO Shock mount hardware Spark 17
266000	SCO Shock mount bush set FOX Spark 17
254121	SCO Cableguide noodle Trunnion nude
263379	SCO Rear Shock Spark 120mm FoxFltPerf 17
250580	SYN Headset IS42/28.6 - IS52/40
262082	SCO Headset spacers+cap Syncros 1.5 MTB
250562	SYN Computer Mount for MTB Stem FL
250566	SYN Stem FL2.0 31.8mm
250577	SYN Grips Women Pro Lock-On
272450	SCO Twinloc lever down clamp/seatpost 19
254095	SCO Brake mount Scale/Spark 12/180mm 17
223309	SCO Seatclamp 34.9mm CrMo bolt
278396	SCO Seatpost-Serv Air cartkit Duncan 2.5
278398	SCO Seatpost-Serv.seal kit Duncan 2.5
277032	SCO Axle RWS rear 148x12 boost plug T30
242437	SCO Hub-rep kit Syncros Formula CL811
242439	SCO Hub-rep kit Syncros Formula CL148S
266810	SCO Spoke SY/Form rep kit XR2.0 18
252417	SCO Rim Syncros Alex X25 29 32H
254101	SCO Chainguide set Spark 17
273332	SCO Cable housing anti-rattle liners

CONTESSA SPARK 930



ITEM	DESCRIPTION
254092	SCO Dropout hanger boost TA12 alloy 17
266587	SCO Cableguide set Sca/Spa/Gen H-tube 18
254117	SCO Cableguide Spark D/T carb/alu out 17
254114	SCO Cableguide Spa/Sca17/Gen18 out
254115	SCO Cableguide Spa17/Gen18 C-stay rub
254120	SCO Cableguide Trunnion X-Fusion
254089	SCO FD blank Spa/Sca17/Gen18
254087	SCO Front derailleur mount Spa17/Gen18
254578	SCO CSP Screw on Spark 900 Alloy 2017
267285	SCO Linkage bar Spark alloy 120mm 18
266573	SCO Igus bush set Spark/Genius/E- 18
274487	SCO Screw set Up pivots Trunnion version
262039	SCO Swingarm rep kit Spark 120mm 17
262044	SCO Shock mount hardware Spark 17
266001	SCO Shock mount bush set X-Fus. Spark 17
254121	SCO Cableguide noodle Trunnion nude
252401	SCO Rear Shock Spark 120mm X-Fusion 17
228441	SYN Headset ZS44/28.6 - ZS55/40
250577	SYN Grips Women Pro Lock-On
272450	SCO Twinloc lever down clamp/seatpost 19
254095	SCO Brake mount Scale/Spark 12/180mm 17
223309	SCO Seatclamp 34.9mm CrMo bolt
278396	SCO Seatpost-Serv Air cartkit Duncan 2.5
278398	SCO Seatpost-Serv.seal kit Duncan 2.5
277032	SCO Axle RWS rear 148x12 boost plug T30
252417	SCO Rim Syncros Alex X25 29 32H
254101	SCO Chainguide set Spark 17

GENIUS/CONTESSA GENIUS



GENIUS 900 TND AXS



ITEM	DESCRIPTION
282437	SCO Chainstays Genius 900 Tuned 21
282464	SCO Seatstays Genius 900 Tuned 21
254090	SCO Dropout hanger boost TA12-SW carb 17
266587	SCO Cableguide set Sca/Spa/Gen H-tube 18
254114	SCO Cableguide Spa/Sca17/Gen18 out
254115	SCO Cableguide Spa17/Gen18 C-stay rub
254118	SCO Cableguide Trunnion Fox Nude 17
266268	SCO Downtube Protector Genius 2018
266266	SCO CSP Glue on Genius Carbon 2018
282707	SCO Linkage bar Genius carbon 21
274487	SCO Screw set Up pivots Trunnion version
273034	SCO Swingarm rep kit Genius 19
265586	SYN Headset ZS44/28.6 - ZS56/40
262082	SCO Headset spacers+cap Syncros 1.5 MTB
275433	SYN Comp. Mount Hixon iC, Stem XR + FL
275473	SCO Stem Hardware Kit Hixon iC
270195	SYN Bar/Stem Hixon iC SL 780mm
250574	SYN Grips Pro, Lock-On
272450	SCO Twinloc lever down clamp/seatpost 19
266575	SCO Shock mount hardware Gen18 Ran19
266577	SCO Shock mount bush set Fox Gen18 Ran19
254121	SCO Cableguide noodle Trunnion nude
272446	SCO Rear shock Genius Fox TR KSH 19
223309	SCO Seatclamp 34.9mm CrMo bolt
270207	SYN Saddle Tofino 1.5
277032	SCO Axle RWS rear 148x12 boost plug T30
271255	SCO Hub rep kit SY Revelstoke 1.5F 19
271254	SCO Hub rep kit SY Revelstoke 1.5 XD R19
271290	SCO Rim SY Revelstoke 1.0 F 28H 19 Wty
271291	SCO Rim SY Revelstoke 1.0 R 28H 19 Wty
268473	SCO Chainguide set Genius 18
273332	SCO Cable housing anti-rattle liners

GENIUS 910 AXS



ITEM	DESCRIPTION
282438	SCO Chainstays Genius 910 21
282465	SCO Seatstays Genius 910 21
254092	SCO Dropout hanger boost TA12 alloy 17
266587	SCO Cableguide set Sca/Spa/Gen H-tube 18
254114	SCO Cableguide Spa/Sca17/Gen18 out
254115	SCO Cableguide Spa17/Gen18 C-stay rub
254118	SCO Cableguide Trunnion Fox Nude 17
254089	SCO FD blank Spa/Sca17/Gen18
254087	SCO Front derailleur mount Spa17/Gen18
266268	SCO Downtube Protector Genius 2018
266267	SCO CSP Glue on Genius Alloy 2018
282706	SCO Linkage bar Genius alloy 21
274487	SCO Screw set Up pivots Trunnion version
273034	SCO Swingarm rep kit Genius 19
265586	SYN Headset ZS44/28.6 - ZS56/40
262082	SCO Headset spacers+cap Syncros 1.5 MTB
275433	SYN Comp. Mount Hixon iC, Stem XR + FL
275473	SCO Stem Hardware Kit Hixon iC
270195	SYN Bar/Stem Hixon iC SL 780mm
250574	SYN Grips Pro, Lock-On
272450	SCO Twinloc lever down clamp/seatpost 19
266575	SCO Shock mount hardware Gen18 Ran19
266577	SCO Shock mount bush set Fox Gen18 Ran19
254121	SCO Cableguide noodle Trunnion nude
272447	SCO Rear shock Genius Fox TR 19
223309	SCO Seatclamp 34.9mm CrMo bolt
270207	SYN Saddle Tofino 1.5
277032	SCO Axle RWS rear 148x12 boost plug T30
271255	SCO Hub rep kit SY Revelstoke 1.5F 19
271254	SCO Hub rep kit SY Revelstoke 1.5 XD R19
271292	SCO Rim SY Revelstoke 1.5 28H 19 Wty
268473	SCO Chainguide set Genius 18
273332	SCO Cable housing anti-rattle liners

GENIUS 920



ITEM	DESCRIPTION
282439	SCO Chainstays Genius 920 21
282466	SCO Seatstays Genius 920 21
254092	SCO Dropout hanger boost TA12 alloy 17
266587	SCO Cableguide set Sca/Spa/Gen H-tube 18
254114	SCO Cableguide Spa/Sca17/Gen18 out
254115	SCO Cableguide Spa17/Gen18 C-stay rub
254118	SCO Cableguide Trunnion Fox Nude 17
254089	SCO FD blank Spa/Sca17/Gen18
254087	SCO Front derailleur mount Spa17/Gen18
266268	SCO Downtube Protector Genius 2018
266267	SCO CSP Glue on Genius Alloy 2018
282706	SCO Linkage bar Genius alloy 21
274487	SCO Screw set Up pivots Trunnion version
273034	SCO Swingarm rep kit Genius 19
265586	SYN Headset ZS44/28.6 - ZS56/40
262082	SCO Headset spacers+cap Syncros 1.5 MTB
250565	SYN Stem FL1.5, 31.8mm
250562	SYN Computer Mount for MTB Stem FL
275406	SYN H.bar Hixon1.5 780mm
250574	SYN Grips Pro, Lock-On
272450	SCO Twinloc lever down clamp/seatpost 19
266575	SCO Shock mount hardware Gen18 Ran19
266577	SCO Shock mount bush set Fox Gen18 Ran19
254121	SCO Cableguide noodle Trunnion nude
272447	SCO Rear shock Genius Fox TR 19
223309	SCO Seatclamp 34.9mm CrMo bolt
270211	SYN Saddle Tofino 2.0
277032	SCO Axle RWS rear 148x12 boost plug T30
266786	SCO Hub rep kit SY/Form XR2.0 F 6blt 18
266787	SCO Hub rep kit SY/Form XR2.0 R XD 6blt
272459	SCO Spoke Sy/Form rep kit Revel 2.0 19
271293	SCO Rim SY Revelstoke 2.0 28H 19 Wty
268473	SCO Chainguide set Genius 18
273332	SCO Cable housing anti-rattle liners

GENIUS 930



ITEM	DESCRIPTION
282440	SCO Chainstays Genius 930 21
282467	SCO Seatstays Genius 930 21
254092	SCO Dropout hanger boost TA12 alloy 17
266587	SCO Cableguide set Sca/Spa/Gen H-tube 18
254114	SCO Cableguide Spa/Sca17/Gen18 out
254115	SCO Cableguide Spa17/Gen18 C-stay rub
254118	SCO Cableguide Trunnion Fox Nude 17
254089	SCO FD blank Spa/Sca17/Gen18
254087	SCO Front derailleur mount Spa17/Gen18
266268	SCO Downtube Protector Genius 2018
266267	SCO CSP Glue on Genius Alloy 2018
282706	SCO Linkage bar Genius alloy 21
274487	SCO Screw set Up pivots Trunnion version
273034	SCO Swingarm rep kit Genius 19
265586	SYN Headset ZS44/28.6 - ZS56/40
262082	SCO Headset spacers+cap Syncros 1.5 MTB
250565	SYN Stem FL1.5, 31.8mm
250562	SYN Computer Mount for MTB Stem FL
275406	SYN H.bar Hixon1.5 780mm
250574	SYN Grips Pro, Lock-On
272450	SCO Twinloc lever down clamp/seatpost 19
266575	SCO Shock mount hardware Gen18 Ran19
266577	SCO Shock mount bush set Fox Gen18 Ran19
254121	SCO Cableguide noodle Trunnion nude
272447	SCO Rear shock Genius Fox TR 19
223309	SCO Seatclamp 34.9mm CrMo bolt
263443	SYN Seatpost Duncan Dropper 2.0 125mm
265568	SYN Seatpost Duncan Dropper 2.0 150mm
278397	SCO Seatpost-Serv Air cartkit Duncan 2.0
262072	SCO Tige selle-Serv.air cartkit Sync 2.0
278399	SCO Seatpost-Serv.seal kit Duncan 2.0
270211	SYN Saddle Tofino 2.0
277032	SCO Axle RWS rear 148x12 boost plug T30
266786	SCO Hub rep kit SY/Form XR2.0 F 6blt 18
266787	SCO Hub rep kit SY/Form XR2.0 R XD 6blt
272459	SCO Spoke Sy/Form rep kit Revel 2.0 19
271293	SCO Rim SY Revelstoke 2.0 28H 19 Wty
268473	SCO Chainguide set Genius 18
273332	SCO Cable housing anti-rattle liners

GENIUS 940



ITEM	DESCRIPTION
282441	SCO Chainstays Genius 940 21
282468	SCO Seatstays Genius 940 21
254092	SCO Dropout hanger boost TA12 alloy 17
266587	SCO Cableguide set Sca/Spa/Gen H-tube 18
254114	SCO Cableguide Spa/Sca17/Gen18 out
254115	SCO Cableguide Spa17/Gen18 C-stay rub
254118	SCO Cableguide Trunnion Fox Nude 17
254089	SCO FD blank Spa/Sca17/Gen18
254087	SCO Front derailleur mount Spa17/Gen18
266268	SCO Downtube Protector Genius 2018
266267	SCO CSP Glue on Genius Alloy 2018
282706	SCO Linkage bar Genius alloy 21
274487	SCO Screw set Up pivots Trunnion version
273034	SCO Swingarm rep kit Genius 19
265586	SYN Headset ZS44/28.6 - ZS56/40
262082	SCO Headset spacers+cap Syncros 1.5 MTB
250566	SYN Stem FL2.0, 31.8mm
250562	SYN Computer Mount for MTB Stem FL
250574	SYN Grips Pro, Lock-On
272450	SCO Twinloc lever down clamp/seatpost 19
266575	SCO Shock mount hardware Gen18 Ran19
266577	SCO Shock mount bush set Fox Gen18 Ran19
254122	SCO Cableguide noodle Trunnion Float 17
223309	SCO Seatclamp 34.9mm CrMo bolt
263443	SYN Seatpost Duncan Dropper 2.0 125mm
265568	SYN Seatpost Duncan Dropper 2.0 150mm
278396	SCO Seatpost-Serv Air cartkit Duncan 2.5
278398	SCO Seatpost-Serv.seal kit Duncan 2.5
270211	SYN Saddle Tofino 2.0
277032	SCO Axle RWS rear 148x12 boost plug T30
242437	SCO Hub-rep kit Syncros Formula CL811
242439	SCO Hub-rep kit Syncros Formula CL148S
266608	SCO Rim SY/X-30s D 32H 18
268473	SCO Chainguide set Genius 18
265596	SYN Trail fender
273332	SCO Cable housing anti-rattle liners

GENIUS 950



ITEM	DESCRIPTION
254092	SCO Dropout hanger boost TA12 alloy 17
266587	SCO Cableguide set Sca/Spa/Gen H-tube 18
254114	SCO Cableguide Spa/Sca17/Gen18 out
254115	SCO Cableguide Spa17/Gen18 C-stay rub
254119	SCO Cableguide Trunnion Fox Float
254089	SCO FD blank Spa/Sca17/Gen18
254087	SCO Front derailleur mount Spa17/Gen18
266268	SCO Downtube Protector Genius 2018
266267	SCO CSP Glue on Genius Alloy 2018
282706	SCO Linkage bar Genius alloy 21
274487	SCO Screw set Up pivots Trunnion version
273034	SCO Swingarm rep kit Genius 19
265586	SYN Headset ZS44/28.6 - ZS56/40
262082	SCO Headset spacers+cap Syncros 1.5 MTB
250566	SYN Stem FL2.0, 31.8mm
250562	SYN Computer Mount for MTB Stem FL
250574	SYN Grips Pro, Lock-On
272450	SCO Twinloc lever down clamp/seatpost 19
266575	SCO Shock mount hardware Gen18 Ran19
266577	SCO Shock mount bush set Fox Gen18 Ran19
254122	SCO Cableguide noodle Trunnion Float 17
223309	SCO Seatclamp 34.9mm CrMo bolt
278396	SCO Seatpost-Serv Air cartkit Duncan 2.5
278398	SCO Seatpost-Serv.seal kit Duncan 2.5
277032	SCO Axle RWS rear 148x12 boost plug T30
266608	SCO Rim SY/X-30s D 32H 18
268473	SCO Chainguide set Genius 18
273332	SCO Cable housing anti-rattle liners

GENIUS 960



ITEM	DESCRIPTION
254092	SCO Dropout hanger boost TA12 alloy 17
266587	SCO Cableguide set Sca/Spa/Gen H-tube 18
254114	SCO Cableguide Spa/Sca17/Gen18 out
254115	SCO Cableguide Spa17/Gen18 C-stay rub
254120	SCO Cableguide Trunnion X-Fusion
254089	SCO FD blank Spa/Sca17/Gen18
254087	SCO Front derailleur mount Spa17/Gen18
266268	SCO Downtube Protector Genius 2018
266267	SCO CSP Glue on Genius Alloy 2018
282706	SCO Linkage bar Genius alloy 21
274487	SCO Screw set Up pivots Trunnion version
273034	SCO Swingarm rep kit Genius 19
265586	SYN Headset ZS44/28.6 - ZS56/40
262082	SCO Headset spacers+cap Syncros 1.5 MTB
250566	SYN Stem FL2.0, 31.8mm
250562	SYN Computer Mount for MTB Stem FL
250574	SYN Grips Pro, Lock-On
272450	SCO Twinloc lever down clamp/seatpost 19
266575	SCO Shock mount hardware Gen18 Ran19
266576	SCO Shock mount bush set X-Fus Gen18 Ran
266585	SCO Rear shock Genius X/Fusion Nude 4 18
223309	SCO Seatclamp 34.9mm CrMo bolt
278729	SCO Seatpost-Serv Air cartkit Duncan
267432	SCO Seatpost-serv.seal kit 2.5
277032	SCO Axle RWS rear 148x12 boost plug T30
242437	SCO Hub-rep kit Syncros Formula CL811
242439	SCO Hub-rep kit Syncros Formula CL148S
266608	SCO Rim SY/X-30s D 32H 18
268473	SCO Chainguide set Genius 18
273332	SCO Cable housing anti-rattle liners

CONTESSA GENIUS 910



ITEM	DESCRIPTION
282448	SCO Chainstays Cont Genius 910 21
282475	SCO Seatstays Cont Genius 910 21
254092	SCO Dropout hanger boost TA12 alloy 17
266587	SCO Cableguide set Sca/Spa/Gen H-tube 18
254114	SCO Cableguide Spa/Sca17/Gen18 out
254115	SCO Cableguide Spa17/Gen18 C-stay rub
254118	SCO Cableguide Trunnion Fox Nude 17
254089	SCO FD blank Spa/Sca17/Gen18
254087	SCO Front derailleur mount Spa17/Gen18
266268	SCO Downtube Protector Genius 2018
266267	SCO CSP Glue on Genius Alloy 2018
272453	SCO Linkage bar Genius Alloy 19/20
274487	SCO Screw set Up pivots Trunnion version
273034	SCO Swingarm rep kit Genius 19
265586	SYN Headset ZS44/28.6 - ZS56/40
262082	SCO Headset spacers+cap Syncros 1.5 MTB
250566	SYN Stem FL2.0, 31.8mm
250577	SYN Grips Women Pro Lock-On
272450	SCO Twinloc lever down clamp/seatpost 19
266575	SCO Shock mount hardware Gen18 Ran19
266577	SCO Shock mount bush set Fox Gen18 Ran19
254122	SCO Cableguide noodle Trunnion Float 17
223309	SCO Seatclamp 34.9mm CrMo bolt
278396	SCO Seatpost-Serv Air cartkit Duncan 2.5
278398	SCO Seatpost-Serv.seal kit Duncan 2.5
270223	SYN Saddle Savona V 2.0, Channel
277032	SCO Axle RWS rear 148x12 boost plug T30
242437	SCO Hub-rep kit Syncros Formula CL811
242439	SCO Hub-rep kit Syncros Formula CL148S
266608	SCO Rim SY/X-30s D 32H 18
268473	SCO Chainguide set Genius 18
265596	SYN Trail fender
273332	SCO Cable housing anti-rattle liners

CONTESSA GENIUS 920



ITEM	DESCRIPTION
254092	SCO Dropout hanger boost TA12 alloy 17
266587	SCO Cableguide set Sca/Spa/Gen H-tube 18
254114	SCO Cableguide Spa/Sca17/Gen18 out
254115	SCO Cableguide Spa17/Gen18 C-stay rub
254118	SCO Cableguide Trunnion Fox Nude 17
254089	SCO FD blank Spa/Sca17/Gen18
254087	SCO Front derailleur mount Spa17/Gen18
266268	SCO Downtube Protector Genius 2018
266267	SCO CSP Glue on Genius Alloy 2018
272453	SCO Linkage bar Genius Alloy 19/20
274487	SCO Screw set Up pivots Trunnion version
273034	SCO Swingarm rep kit Genius 19
265586	SYN Headset ZS44/28.6 - ZS56/40
262082	SCO Headset spacers+cap Syncros 1.5 MTB
250566	SYN Stem FL2.0, 31.8mm
250577	SYN Grips Women Pro Lock-On
272450	SCO Twinloc lever down clamp/seatpost 19
266575	SCO Shock mount hardware Gen18 Ran19
266576	SCO Shock mount bush set X-Fus Gen18 Ran
254121	SCO Cableguide noodle Trunnion nude
266585	SCO Rear shock Genius X/Fusion Nude 4 18
223309	SCO Seatclamp 34.9mm CrMo bolt
278729	SCO Seatpost-Serv Air cartkit Duncan
267432	SCO Seatpost-serv.seal kit 2.5
277032	SCO Axle RWS rear 148x12 boost plug T30
242437	SCO Hub-rep kit Syncros Formula CL811
242439	SCO Hub-rep kit Syncros Formula CL148S
266608	SCO Rim SY/X-30s D 32H 18
268473	SCO Chainguide set Genius 18
273332	SCO Cable housing anti-rattle liners

RANSOM/CONTESSA RANSOM



RANSOM 900 TND AXS



ITEM	DESCRIPTION
282442	SCO Chainstays Ransom 900 Tuned 21
282469	SCO Seatstays Ransom 900 Tuned 21
254090	SCO Dropout hanger boost TA12-SW carb 17
266587	SCO Cableguide set Sca/Spa/Gen H-tube 18
271245	SCO Cableguide set rear Ransom 19
271244	SCO Cableguide spacer Trunnion Ran 19
254118	SCO Cableguide Trunnion Fox Nude 17
270153	SCO CS/SS Protector Glue on Ransom 2019
270155	SCO Downtube Protector Ransom CB 2019 2p
282704	SCO Linkage bar Ransom alloy 21
274487	SCO Screw set Up pivots Trunnion version
271241	SCO Swingarm rep kit Ransom 19
266575	SCO Shock mount hardware Gen18 Ran19
266577	SCO Shock mount bush set Fox Gen18 Ran19
254121	SCO Cableguide noodle Trunnion nude
272442	SCO Rear shock Ransom Fox TR EV KSH 19
265586	SYN Headset ZS44/28.6 - ZS56/40
262082	SCO Headset spacers+cap Syncros 1.5 MTB
275433	SYN Comp. Mount Hixon iC, Stem XR + FL
275473	SCO Stem Hardware Kit Hixon iC
270196	SYN H.bar Hixon iC 1.0 Rise 800mm
250574	SYN Grips Pro, Lock-On
272450	SCO Twinloc lever down clamp/seatpost 19
223309	SCO Seatclamp 34.9mm CrMo bolt
282358	SYN Saddle Kaslo R 1.5, Channel
277032	SCO Axle RWS rear 148x12 boost plug T30
271254	SCO Hub rep kit SY Revelstoke 1.5 XD R19
271255	SCO Hub rep kit SY Revelstoke 1.5F 19
266810	SCO Spoke SY/Form rep kit XR2.0 18
271292	SCO Rim SY Revelstoke 1.5 28H 19 Wty
271240	SCO Chainguide Ransom 19
273332	SCO Cable housing anti-rattle liners

RANSOM 910



ITEM	DESCRIPTION
282443	SCO Chainstays Ransom 910 21
282470	SCO Seatstays Ransom 910 21
254090	SCO Dropout hanger boost TA12-SW carb 17
266587	SCO Cableguide set Sca/Spa/Gen H-tube 18
271245	SCO Cableguide set rear Ransom 19
271244	SCO Cableguide spacer Trunnion Ran 19
254118	SCO Cableguide Trunnion Fox Nude 17
270153	SCO CS/SS Protector Glue on Ransom 2019
270155	SCO Downtube Protector Ransom CB 2019 2p
282704	SCO Linkage bar Ransom alloy 21
274487	SCO Screw set Up pivots Trunnion version
271241	SCO Swingarm rep kit Ransom 19
266575	SCO Shock mount hardware Gen18 Ran19
266577	SCO Shock mount bush set Fox Gen18 Ran19
254121	SCO Cableguide noodle Trunnion nude
272442	SCO Rear shock Ransom Fox TR EV KSH 19
265586	SYN Headset ZS44/28.6 - ZS56/40
262082	SCO Headset spacers+cap Syncros 1.5 MTB
270198	SYN Stem XM1.5, 31.8mm
250562	SYN Computer Mount for MTB Stem FL
270197	SYN H.bar Hixon1.5 Rise, 20mm Rise
250574	SYN Grips Pro, Lock-On
272450	SCO Twinloc lever down clamp/seatpost 19
223309	SCO Seatclamp 34.9mm CrMo bolt
282358	SYN Saddle Kaslo R 1.5, Channel
277032	SCO Axle RWS rear 148x12 boost plug T30
266786	SCO Hub rep kit SY/Form XR2.0 F 6blt 18
270898	SCO Hub rep kit SY/Form XR2.5 R XD 18
272459	SCO Spoke Sy/Form rep kit Revel 2.0 19
271293	SCO Rim SY Revelstoke 2.0 28H 19 Wty
271240	SCO Chainguide Ransom 19
273332	SCO Cable housing anti-rattle liners

RANSOM 920



ITEM	DESCRIPTION
254092	SCO Dropout hanger boost TA12 alloy 17
266587	SCO Cableguide set Sca/Spa/Gen H-tube 18
271245	SCO Cableguide set rear Ransom 19
271244	SCO Cableguide spacer Trunnion Ran 19
254118	SCO Cableguide Trunnion Fox Nude 17
270154	SCO CS/SS Prot. Glue on Ransom AL 2019
270156	SCO D/T Protector Glue on Ransom AL 2019
282704	SCO Linkage bar Ransom alloy 21
274487	SCO Screw set Up pivots Trunnion version
271241	SCO Swingarm rep kit Ransom 19
266575	SCO Shock mount hardware Gen18 Ran19
266577	SCO Shock mount bush set Fox Gen18 Ran19
254121	SCO Cableguide noodle Trunnion nude
272443	SCO Rear shock Ransom Fox T EV 19
265586	SYN Headset ZS44/28.6 - ZS56/40
262082	SCO Headset spacers+cap Syncros 1.5 MTB
270198	SYN Stem XM1.5, 31.8mm
250562	SYN Computer Mount for MTB Stem FL
270197	SYN H.bar Hixon1.5 Rise, 20mm Rise
250574	SYN Grips Pro, Lock-On
272450	SCO Twinloc lever down clamp/seatpost 19
223309	SCO Seatclamp 34.9mm CrMo bolt
263443	SYN Seatpost Duncan Dropper 2.0 125mm
265558	SYN Seatpost Duncan Dropper 2.0 150mm
278397	SCO Seatpost-Serv Air cartkit Duncan 2.0
278399	SCO Seatpost-Serv.seal kit Duncan 2.0
277032	SCO Axle RWS rear 148x12 boost plug T30
266786	SCO Hub rep kit SY/Form XR2.0 F 6blt 18
271256	SCO Hub rep kit SY Silve/Reve 2.5SH R 19
272459	SCO Spoke Sy/Form rep kit Revel 2.0 19
271293	SCO Rim SY Revelstoke 2.0 28H 19 Wty
271240	SCO Chainguide Ransom 19
273332	SCO Cable housing anti-rattle liners

RANSOM 930

ITEM	DESCRIPTION
254092	SCO Dropout hanger boost TA12 alloy 17
266587	SCO Cableguide set Sca/Spa/Gen H-tube 18
271245	SCO Cableguide set rear Ransom 19
271244	SCO Cableguide spacer Trunnion Ran 19
254118	SCO Cableguide Trunnion Fox Nude 17
270154	SCO CS/SS Prot. Glue on Ransom AL 2019
270156	SCO D/T Protector Glue on Ransom AL 2019
282704	SCO Linkage bar Ransom alloy 21
274487	SCO Screw set Up pivots Trunnion version
271241	SCO Swingarm rep kit Ransom 19
266575	SCO Shock mount hardware Gen18 Ran19
266577	SCO Shock mount bush set Fox Gen18 Ran19
254121	SCO Cableguide noodle Trunnion nude
272444	SCO Rear shock Ransom X-Fusion Nude 19
265586	SYN Headset ZS44/28.6 - ZS56/40
262082	SCO Headset spacers+cap Syncros 1.5 MTB
270198	SYN Stem XM1.5, 31.8mm
250562	SYN Computer Mount for MTB Stem FL
270197	SYN H.bar Hixon1.5 Rise, 20mm Rise
250574	SYN Grips Pro, Lock-On
272450	SCO Twinloc lever down clamp/seatpost 19
223309	SCO Seatclamp 34.9mm CrMo bolt
278396	SCO Seatpost-Serv Air cartkit Duncan 2.5
278398	SCO Seatpost-Serv.seal kit Duncan 2.5
277032	SCO Axle RWS rear 148x12 boost plug T30
242437	SCO Hub-rep kit Syncros Formula CL811
242439	SCO Hub-rep kit Syncros Formula CL148S
266608	SCO Rim SY/X-30s D 32H 18
271240	SCO Chainguide Ransom 19
273332	SCO Cable housing anti-rattle liners

CONT. RANSOM 910

ITEM	DESCRIPTION
285791	SCO Chainstays Cont Ransom 910 21
285792	SCO Seatstays Cont Ransom 910 21
254090	SCO Dropout hanger boost TA12-SW carb 17
266587	SCO Cableguide set Sca/Spa/Gen H-tube 18
271245	SCO Cableguide set rear Ransom 19
271244	SCO Cableguide spacer Trunnion Ran 19
254118	SCO Cableguide Trunnion Fox Nude 17
270153	SCO CS/SS Protector Glue on Ransom 2019
270155	SCO Downtube Protector Ransom CB 2019 2p
274487	SCO Screw set Up pivots Trunnion version
271241	SCO Swingarm rep kit Ransom 19
266575	SCO Shock mount hardware Gen18 Ran19
266577	SCO Shock mount bush set Fox Gen18 Ran19
254121	SCO Cableguide noodle Trunnion nude
272442	SCO Rear shock Ransom Fox TR EV KSH 19
265586	SYN Headset ZS44/28.6 - ZS56/40
262082	SCO Headset spacers+cap Syncros 1.5 MTB
270198	SYN Stem XM1.5, 31.8mm
250562	SYN Computer Mount for MTB Stem FL
270197	SYN H.bar Hixon1.5 Rise, 20mm Rise
250577	SYN Grips Women Pro Lock-On
272450	SCO Twinloc lever down clamp/seatpost 19
223309	SCO Seatclamp 34.9mm CrMo bolt
270219	SYN Saddle Savona V 1.5, Channel
277032	SCO Axle RWS rear 148x12 boost plug T30
266786	SCO Hub rep kit SY/Form XR2.0 F 6blt 18
266787	SCO Hub rep kit SY/Form XR2.0 R XD 6blt
272459	SCO Spoke Sy/Form rep kit Revel 2.0 19
271293	SCO Rim SY Revelstoke 2.0 28H 19 Wty
271240	SCO Chainguide Ransom 19
273332	SCO Cable housing anti-rattle liners

MTB WARRANTY FRAMES & TECHNICAL DATA

ITEM	SCALE FRAMES
282403	SCO Frame Scale RC 900 W/C 21 Wty
282404	SCO Frame Scale RC 900 T.I 21 Wty
282405	SCO Frame Scale RC 900 Team 21 Wty
282406	SCO Frame Scale 910 21 Wty
285922	SCO Frame Scale 930 21 Wty
282407	SCO Frame Scale 950 21 Wty
282408	SCO Frame Scale 970 21 Wty
ITEM	SPARK FRONT TRIANGLES & FRAMES
283333	SCO Front triangle Spark RC S-Sonic 21
282361	SCO Front triangle Spark RC 900 SL 21
282362	SCO Front triangle Spark RC 900 W/C 21
282363	SCO Front triangle Spark RC 900 Pro 21
282364	SCO Front triangle Spark RC 900 T.I 21
282365	SCO Front triangle Spark RC 900 Team 21
282366	SCO Front triangle Spark RC 900 Comp 21
282371	SCO Front triangle Spark 900 Ultimate 21
282372	SCO Front triangle Spark 900 21
282373	SCO Front triangle Spark 910 21
282374	SCO Front triangle Spark 920 21
282375	SCO Front triangle Spark 930 21
285786	SCO Front triangle Spark 940 21
282410	SCO Frame Spark 950 21 Wty
282411	SCO Frame Spark 970 21 Wty
ITEM	GENIUS FRONT TRIANGLES & FRAMES
282376	SCO Front triangle Genius 900 Tuned 21
282377	SCO Front triangle Genius 910 21
282378	SCO Front triangle Genius 920 21
282379	SCO Front triangle Genius 930 21
282380	SCO Front triangle Genius 940 21
282412	SCO Frame Genius 950 21 Wty

ITEM	RANSOM FRONT TRIANGLES & FRAME
282381	SCO Front triangle Ransom 900 Tuned 21
282382	SCO Front triangle Ransom 910 21
282413	SCO Frame Ransom 920 21 Wty
ITEM	GAMBLER FRONT TRIANGLES & YZ
282383	SCO Front triangle Gambler 900 Tuned 21
282384	SCO Front triangle Gambler 910 21
282385	SCO Front triangle Gambler 920 21
282386	SCO Front triangle Gambler 930 21
283365	SCO Frame Voltage YZ 0.1 21 Wty
ITEM	ASPECT FRAMES
282414	SCO Frame Aspect 910 21 Wty
282415	SCO Frame Aspect 930 21 Wty
282416	SCO Frame Aspect 950 21 Wty
282417	SCO Frame Aspect 740 21 Wty
282418	SCO Frame Aspect 750 21 Wty
ITEM	CONTESSA MTB
282409	SCO Frame Cont Scale 910 21 Wty
282419	SCO Frame Cont Scale 940 21 Wty
282420	SCO Frame Cont Scale 950 21 Wty
282367	SCO Front triangle Cont Spark RC W/C 21
282368	SCO Front triangle Cont Spark RC Comp 21
282369	SCO Front triangle Cont Spark 910 21
282370	SCO Front triangle Cont Spark 920 21
282421	SCO Frame Cont Spark 930 21 Wty
282387	SCO Front triangle Cont Genius 910 21
285787	SCO Front triangle Cont Ransom 910 21
282422	SCO Frame Cont Active 10 21 Wty
282423	SCO Frame Cont Active 20 21 Wty
285788	SCO Frame Cont Active 40 21 Wty

ITEM	SPARK SWINGARM
283335	SCO Swingarm Spark RC S-Sonic 21
282491	SCO Swingarm Spark RC 900 SL 21
282492	SCO Swingarm Spark RC 900 W/C 21
282493	SCO Swingarm Spark RC 900 Pro 21
282494	SCO Swingarm Spark RC 900 T.I 21
282495	SCO Swingarm Spark RC 900 Team 21
282496	SCO Swingarm Spark RC 900 Comp 21
282501	SCO Swingarm Spark 900 Ultimate 21
282502	SCO Swingarm Spark 900 21
282503	SCO Swingarm Spark 910 21
282504	SCO Swingarm Spark 920 21
282505	SCO Swingarm Spark 930 21
285793	SCO Swingarm Spark 940 21
282497	SCO Swingarm Cont Spark RC W/C 21
282498	SCO Swingarm Cont Spark RC Comp 21
282499	SCO Swingarm Cont Spark 910 21
282500	SCO Swingarm Cont Spark 920 21
ITEM	GENIUS CHAINSTAY & SEATSTAY
282437	SCO Chainstays Genius 900 Tuned 21
282438	SCO Chainstays Genius 910 21
282439	SCO Chainstays Genius 920 21
282440	SCO Chainstays Genius 930 21
282441	SCO Chainstays Genius 940 21
282448	SCO Chainstays Cont Genius 910 21
282464	SCO Seatstays Genius 900 Tuned 21
282465	SCO Seatstays Genius 910 21
282466	SCO Seatstays Genius 920 21
282467	SCO Seatstays Genius 930 21
282468	SCO Seatstays Genius 940 21
282475	SCO Seatstays Cont Genius 910 21

ITEM	RANSOM CHAINSTAY & SEATSTAY
282442	SCO Chainstays Ransom 900 Tuned 21
282443	SCO Chainstays Ransom 910 21
285791	SCO Chainstays Cont Ransom 910 21
282469	SCO Seatstays Ransom 900 Tuned 21
282470	SCO Seatstays Ransom 910 21
285792	SCO Seatstays Cont Ransom 910 21
ITEM	GAMBLER CHAINSTAY & SEATSTAY
282444	SCO Chainstays Gambler 900 Tuned 21
282445	SCO Chainstays Gambler 910 21
282446	SCO Chainstays Gambler 920 21
282447	SCO Chainstays Gambler 930 21
282471	SCO Seatstays Gambler 900 Tuned 21
282472	SCO Seatstays Gambler 910 21
282473	SCO Seatstays Gambler 920 21
282474	SCO Seatstays Gambler 930 21

	Max Rotor Size	BB-spec	F.Derailleur spec	Crankarm	Headset	Stem Length	Bar Width	Seatpost	Seatpost Clamp
SCO Bike Scale RC 900 World Cup AXS	FRONT: 180MM REAR: 160MM	BB DUB PRESSFIT MTB 92	NONE	170(S) 175(M/L/XL)	28.6-44-56/-39.8, H=4.9,S. BEARING	60 (S)/70 (M) 80 (L)/90 (XL)	740MM	31.6X400	34.9MM
SCO Bike Scale RC 900 World Cup	FRONT: 180MM REAR: 160MM	BB DUB PRESSFIT MTB 92	NONE	170(S) 175(M/L/XL)	28.6-44-56/-39.8, H=4.9,S. BEARING	60 (S)/70 (M) 80 (L)/90 (XL)	740MM	31.6X400	34.9MM
SCO Bike Scale RC 900 Team Issue AXS	FRONT: 180MM REAR: 160MM	BB DUB PF MTB 92	NONE	170 (S) 175 (M/L/XL)	1-1/8"-1.5" TAPER FORK	60 (S)/70 (M) 80 (L)/90 (XL)	740mm	31.6X400	34.9mm
SCO Bike Scale RC 900 Team	FRONT: 180MM REAR: 160MM	BB Press Fit DUB PF92 SM-BB71-41A	NONE	170 (S) 175 (M/L/XL)	1-1/8"-1.5" TAPER FORK	60 (S)/70 (M) 80 (L)/90 (XL)	740mm	31.6X400	34.9mm
SCO Bike Scale 910 AXS	FRONT: 180MM REAR: 160MM	BB DUB PF MTB 92	NONE	170 (S) 175 (M/L/XL)	1-1/8"-1.5" TAPER FORK	60 (S)/70 (M) 80 (L)/90 (XL)	740mm	31.6X400	34.9mm
SCO Bike Scale 920	FRONT: 180MM REAR: 160MM	BB DUB PF MTB 92	NONE	170 (S) 175 (M/L/XL)	1-1/8"-1.5" TAPER FORK	60 (S)/70 (M) 80 (L)/90 (XL)	740mm	31.6X400	34.9mm
SCO Bike Scale 925	FRONT: 180MM REAR: 160MM	PRESS FIT MTB 92 BB-MT500-PA	NONE	170 (S) 175 (M/L/XL)	1-1/8"-1.5" TAPER FORK	60 (S)/70 (M) 80 (L)/90 (XL)	740mm	31.6X400	34.9mm
SCO Bike Scale 930 yellow	FRONT: 180MM REAR: 160MM	PRESS FIT MTB 92 BB-MT500-PA	NONE	170 (S) 175 (M/L/XL)	1-1/8"-1.5" TAPER FORK	60 (S)/70 (M) 80 (L)/90 (XL)	740mm	31.6X400	34.9mm
SCO Bike Scale 930 wakame green	FRONT: 180MM REAR: 160MM	PRESS FIT MTB 92 BB-MT500-PA	NONE	170 (S) 175 (M/L/XL)	1-1/8"-1.5" TAPER FORK	60 (S)/70 (M) 80 (L)/90 (XL)	740mm	31.6X400	34.9mm
SCO Bike Scale 940 red	FRONT: 180MM REAR: 160MM	BB DUB PRESS FIT MTB 92	NONE	170mm (S) 175mm (M/L/XL)	1-1/8"-1.5" TAPER FORK	60 (S)/70 (M) 80 (L)/90 (XL)	740mm	31.6X400	34.9mm
SCO Bike Scale 940 granite black	FRONT: 180MM REAR: 160MM	BB DUB PRESS FIT MTB 92	NONE	170 (S) 175(M/L/XL)	1-1/8"-1.5" TAPER FORK	60 (S)/70 (M) 80 (L)/90 (XL)	740mm	31.6X400	34.9mm
SCO Bike Scale 950	FRONT: 180MM REAR: 160MM	BB-MT500-PA FOR MTB "W/O THREAD"	NONE	170(S) 175(M/L/XL/XXL)	1-1/8"- 1.5" 50-62 S.Cups b.bearings	60(S) 70(M)80(L) 90(XL) 100(XXL)	740MM	31.6X400	34.9MM
SCO Bike Scale 960	FRONT: 180MM REAR: 160MM	BB DUB PRESSFIT MTB 89.5	NONE	170(S) 175(M/L/XL/XXL)	1-1/8"- 1.5" 50-62 S.Cups b.bearings	60(S) 70(M) 80(L) 90(XL) 100(XXL)	740MM	31.6X400	34.9MM
SCO Bike Scale 965	FRONT: 180MM REAR: 160MM	BB-MT500-PA FOR MTB "W/O THREAD"	NONE	170(S) 175(M/L/XL/XXL)	1-1/8"- 1.5" 50-62 S.Cups b.bearings	60(S) 70(M) 80)L) 90(XL) 100(XXL)	740MM	31.6X400	34.9MM
SCO Bike Scale 970 red	FRONT: 180MM REAR: 160MM	BB DUB PRESSFIT MTB 89.5	NONE	170(S) 175(M/L/XL/XXL)	1-1/8"- 1.5" 50-62 S.Cups b.bearings	60(S) 70(M) 80)L) 90(XL) 100(XXL)	740MM	31.6X400	34.9MM
SCO Bike Scale 970 dark grey	FRONT: 180MM REAR: 160MM	BB DUB PRESSFIT MTB 89.5	NONE	170(S) 175(M/L/XL/XXL)	1-1/8"- 1.5" 50-62mm S.Cups b.bearings	60(S) 70(M) 80(L) ;90(XL) 100(XXL)	740MM	31.6X400	34.9MM

	Max Rotor Size	BB-spec	F.Derail-leur spec	Crankarm	Headset	Stem Length	Bar Width	Seatpost	Seatpost Clamp	Rear Shock (e2e)	Hardware Shock
SCO Bike Scale 970 dark grey	FRONT: 180MM REAR: 160MM	DUB PF MTB 89.5	NONE	170MM(S) 175MM(M/L/XL/XXL)	1-1/8"- 1.5" 50-62mm ball bearings	60(S) ; 70(M) ; 80(L) ; 90(XL) 100MM(XXL)	740MM	31.6X400MM	34.9MM	NONE	NONE
SCO Bike Scale 980 yellow	FRONT: 180MM REAR: 160MM	MT500-PA FOR MTB THREAD	NONE	170MM(S) 175MM(M/L/XL/XXL)	1-1/8"- 1.5" 50-62mm ball bearings	60(S) ; 70(M) ; 80(L) ; 90(XL) 100MM(XXL)	740MM	31.6X400MM	34.9MM	NONE	NONE
SCO Bike Scale 980 dark grey	FRONT: 180MM REAR: 160MM	MT500-PA FOR MTB THREAD	NONE	170MM(S) 175MM(M/L/XL/XXL)	1-1/8"- 1.5" 50-62mm ball bearings	60(S) ; 70(M) ; 80(L) ; 90(XL) 100MM(XXL)	740MM	31.6X400MM	34.9MM	NONE	NONE
SCO Bike Big Jon	180MM	BB-DUB-BSA-A1	NONE	170mm (S) 175mm (M/L/XL)	1-1/8"-1.5"x 50x61MM	60mm (S/M)/70mm (L/XL)	740mm	31.6x400MM	34.9mm	NONE	NONE
SCO Bike Spark RC 900 SL AXS	FRONT: 180MM REAR: 160MM	BB DUB PF MTB 92	NONE	170MM (S) 175MM (M/L/XL)	28.6-44-56/-39.8, H=4.9,- SEALED BEARING	60(S) ; 70(M) ; 80(L) ; 90(XL) 100MM(XXL)	740MM	31.6X400MM	34.9MM	165x40MM	20x10MM
SCO Bike Spark RC 900 WC AXS	FRONT: 180MM REAR: 160MM	BB DUB PF MTB 92	NONE	170MM(S) 175MM(M/L/XL)	28.6-44-56/-39.8, H=4.9,- SEALED BEARING	60(S) ; 70(M) ; 80(L) ; 90(XL) 100MM(XXL)	740MM	31.6X400MM	34.9MM	165x40MM	20x10MM
SCO Bike Spark RC 900 World Cup	FRONT: 180MM REAR: 160MM	BB DUB PF MTB 92	NONE	170MM(S) 175MM(M/L/XL)	28.6-44-56/-39.8, H=4.9,- SEALED BEARING	60(S) ; 70(M) ; 80(L) ; 90(XL) 100MM(XXL)	740MM	31.6X400MM	34.9MM	165x40MM	20x10MM
SCO Bike Spark RC 900 Pro	FRONT: 180MM REAR: 160MM	SM-BB71-41A THREAD	NONE	170MM(S) 175MM(M/L/XL)	28.6-44-56/-39.8, H=4.9,- SEALED BEARING	60(S) ; 70(M) ; 80(L) ; 90(XL) 100MM(XXL)	740MM	31.6X400MM	34.9MM	165x40MM	20x10MM
SCO Bike Spark RC 900 TI AXS PG	FRONT: 180MM REAR: 160MM	BB DUB PF MTB 92	NONE	170MM(S) 175MM(M/L/XL)	28.6-44-56/-39.8, H=4.9,- SEALED BEARING	60(S) ; 70(M) ; 80(L) ; 90(XL) 100MM(XXL)	740MM	31.6X400MM	34.9MM	165x40MM	20x10MM
SCO Bike Spark RC 900 TIssue AXSarb	FRONT: 180MM REAR: 160MM	BB DUB PF MTB 92	NONE	170MM(S) 175MM(M/L/XL)	28.6-44-56/-39.8, H=4.9,- SEALED BEARING	60(S) ; 70(M) ; 80(L) ; 90(XL) 100MM(XXL)	740MM	31.6X400MM	34.9MM	165x40MM	20x10MM
SCO Bike Spark RC 900 Team	FRONT: 180MM REAR: 160MM	BB DUB PF MTB 92	NONE	170MM(S) 175MM(M/L/XL)	28.6-44-56/-39.8, H=4.9,- SEALED BEARING	60(S) ; 70(M) ; 80(L) ; 90(XL) 100MM(XXL)	740MM	31.6X400MM	34.9MM	165x40MM	20x10MM
SCO Bike Spark RC 900 Comp red	FRONT: 180MM REAR: 160MM	BB DUB PSF MTB 92	NONE	170MM(S) 175MM(M/L/XL)	28.6-44-56/-39.8, H=4.9,- SEALED BEARING	60(S) ; 70(M) ; 80(L) ; 90(XL) 100MM(XXL)	740MM	31.6X400MM	34.9MM	165x40MM	20x10MM

	Max Rotor Size	BB-spec	F.Derail-leur spec	Crankarm	Headset	Stem Length	Bar Width	Seatpost	Seatpost Clamp	Rear Shock (e2e)	Hardware Shock
SCO Bike Spark RC 900 Comp drk grey	FRONT: 180MM REAR: 160MM	BB DUB PF MTB 92	NONE	170MM(S) 175MM(M/L/XL)	28.6-44-56/-39.8, H=4.9,-SEALED BEARING	60(S) ; 70(M) ; 80(L) ; 90(XL)	740MM	31.6X400MM	34.9MM	165x40MM	20x10MM
SCO Bike Spark 900 Ultimate AXS	180MM	BB DUB PF MTB 92	NONE	170MM(S) 175MM(M/L/XL)	28.6-44-56/-39.8, H=4.9,-SEALED BEARING	50(S) ; 60(M) ; 70(L) ; 80(XL)	760MM	31.6X363(S) ; 31.6X418(M/L/XL)	34.9MM	165x45MM	20x10MM
SCO Bike Spark 900 AXS	180MM	BB DUB PF MTB 92	NONE	170MM(S) 175MM(M/L/XL)	28.6-44-56/-39.8, H=4.9,-SEALED BEARING	50(S) ; 60(M) ; 70(L) ; 80(XL)	760MM	31.6X363(S) ; 31.6X418M-M(M/L/XL)	34.9MM	165x45MM	20x10MM
SCO Bike Spark 910	180MM	SM-BB71-41A	NONE	170MM(S) 175MM(M/L/XL)	28.6-44-56/-39.8, H=4.9,-SEALED BEARING	50(S) ; 60(M) ; 70(L) ; 80(XL)	760MM	31.6X363(S) ; 31.6X418M-M(M/L/XL)	34.9MM	165x45MM	20x10MM
SCO Bike Spark 920	180MM	BB DUB PF MTB 92	NONE	170MM(S) 175MM(M/L/XL)	28.6-44-56/-39.8, H=4.9,-SEALED BEARING	50(S) ; 60(M) ; 70(L) ; 80(XL)	760MM	31.6X357(S) ; 31.6X400M-M(M/L/XL)	34.9MM	165x45MM	20x10MM
SCO Bike Spark 930	180MM	BB-MT500-PAINNER COVER	NONE	170MM(S) 175MM(M/L/XL)	28.6-44-56/-39.8, H=4.9,-SEALED BEARING	50(S) ; 60(M) ; 70(L) ; 80(XL)	760MM	31.6X357(S) ; 31.6X400M-M(M/L/XL)	34.9MM	165x45MM	20x10MM
SCO Bike Spark 940	180MM	BB DUB PRESSFIT MTB 92	NONE	170MM(S) 175MM(M/L/XL)	28.6-44-56/-39.8, H=4.9,-SEALED BEARING	50(S) ; 60(M) ; 70(L) ; 80(XL)	760MM	31.6X357 (S) ; 31.6X412MM (M/L/XL)	34.9MM	165x45MM	20x10MM
SCO Bike Spark 950	180MM	BB DUB PRESSFIT MTB 92	NONE	170MM(S) 175MM(M/L/XL)	28.6-44-56/-39.8, H=4.9,-SEALED BEARING	50(S) ; 60(M) ; 70(L) ; 80(XL)	760MM	31.6X357(S) ; 31.6X400M-M(M/L/XL)	34.9MM	165x45MM	20x10MM
SCO Bike Spark 960 red	180MM	BB-MT500-PAINNER COVER	NONE	170MM(S) 175MM(M/L/XL)	28.6-44-56/-39.8, H=4.9,-SEALED BEARING	50(S) ; 60(M) ; 70(L) ; 80(XL)	760MM	31.6X357 (S) ; 31.6X412MM (M/L/XL)	34.9MM	165x45MM	20x10MM
SCO Bike Spark 960 dark grey	180MM	BB-MT500-PAINNER COVER	NONE	170MM(S) 175MM(M/L/XL)	28.6-44-56/-39.8, H=4.9,-SEALED BEARING	50(S) ; 60(M) ; 70(L) ; 80(XL)	760MM	31.6X357 (S) ; 31.6X412MM (M/L/XL)	34.9MM	165x45MM	20x10MM
SCO Bike Spark 970 smith green	180MM	BB DUB PF MTB 92	NONE	170MM(S) 175MM(M/L/XL)	28.6-44-56/-39.8, H=4.9,-SEALED BEARING	50(S) ; 60(M) ; 70(L) ; 80(XL)	760MM	31.6X361 (S) ; 31.6X403MM (M/L/XL)	34.9MM	165x45MM	20x10MM

	Max Rotor Size	BB-spec	F.Derail-leur spec	Crankarm	Headset	Stem Length	Bar Width	Seatpost	Seatpost Clamp	Rear Shock (e2e)	Hardware Shock
SCO Bike Spark 970 granite black	180MM	BB DUB PF MTB 92	NONE	170MM(S) 175MM(M/L/XL)	28.6-44-56/-39.8, H=4.9,- SEALED BEARING	50(S) ; 60(M) ; 70(L) ; 80(XL)	760MM	31.6X361 (S) ; 31.6X403MM (M/L/XL)	34.9MM	165x45MM	20x10MM
SCO Bike Genius 900 Tuned AXS	FRONT: 203MM REAR: 180MM	BB DUB PF MTB 92	NONE	170MM(S) 175MM(M/L/XL)	28.6-44-56/-39.8, H=4.9,- SEALED BEARING	50MM	780MM	31.6X363(S) ; 31.6X418(M/L) ; 31.6X475(XL)	34.9MM	185x55MM	30X8MM
SCO Bike Genius 910 AXS	FRONT: 203MM REAR: 180MM	BB DUB PF MTB 92	NONE	170MM(S) 175MM(M/L/XL)	28.6-44-56/-39.8, H=4.9,- SEALED BEARING	50MM	780MM	31.6X363(S) ; 31.6X418(M/L) ; 31.6X475(XL)	34.9MM	185x55MM	30X8MM
SCO Bike Genius 920	FRONT: 203MM REAR: 180MM	SM-BB71-41A FOR MTB “INNER COVER	NONE	170MM(S) 175MM(M/L/XL)	28.6-44-56/-39.8, H=4.9,- SEALED BEARING	50MM	780MM	31.6X363(S) ; 31.6X418(M/L) ; 31.6X475(XL)	34.9MM	185x55MM	30X8MM
SCO Bike Genius 930	FRONT: 203MM REAR: 180MM	SM-BB71-41A FOR MTB “INNER COVER	NONE	170MM(S) 175MM(M/L/XL)	28.6-44-56/-39.8, H=4.9,- SEALED BEARING	50MM	780MM	31.6X363(S) ; 31.6X418(M/L) ; 31.6X475(XL)	34.9MM	185x55MM	30X8MM
SCO Bike Genius 940	FRONT: 203MM REAR: 180MM	SM-BB71-41A FOR MTB “INNER COVER	NONE	170MM(S) 175MM(M/L/XL)	28.6-44-56/-39.8, H=4.9,- SEALED BEARING	50MM	780MM	31.6X363(S) ; 31.6X418(M/L) ; 31.6X475(XL)	34.9MM	185x55MM	30X8MM
SCO Bike Genius 950	FRONT: 203MM REAR: 180MM	SM-BB71-41A FOR MTB “INNER COVER	NONE	170MM(S) 175MM(M/L/XL)	28.6-44-56/-39.8, H=4.9,- SEALED BEARING	50MM	780MM	31.6X363(S) ; 31.6X418(M/L) ; 31.6X475(XL)	34.9MM	185x55MM	30X8MM
SCO Bike Genius 960	FRONT: 203MM REAR: 180MM	BB DUB PF MTB 92	NONE	170MM(S) 175MM(M/L/XL)	28.6-44-56/-39.8, H=4.9,- SEALED BEARING	50MM	780MM	31.6X363(S) ; 31.6X418(M/L) ; 31.6X475(XL)	34.9MM	185x55MM	30X8MM
SCO Bike Ransom 900 Tuned AXS	FRONT: 203MM REAR: 180MM	BB DUB PSF MTB 92	NONE	170MM(S) 175MM(M/L/XL)	28.6-44-56/-39.8, H=4.9,- SEALED BEARING	40MM(S) 50MM(M,L,XL)	800MM	31.6X363(S) ; 31.6X418(M/L) ; 31.6X475(XL)	34.9MM	205x65MM	30X8MM
SCO Bike Ransom 910	FRONT: 203MM REAR: 180MM	BB DUB PF MTB 92	NONE	170MM(S) 175MM(M/L/XL)	28.6-44-56/-39.8, H=4.9,- SEALED BEARING	40MM(S,M) 50MM(L,XL)	800MM	31.6X363(S) ; 31.6X418(M/L) ; 31.6X475(XL)	34.9MM	205x65MM	30X8MM

	Max Rotor Size	BB-spec	F.Derailleur spec	Crankarm	Headset	Stem Length	Bar Width	Seatpost	Seatpost Clamp	Rear Shock (e2e)	Hardware Shock
SCO Bike Ransom 920	F: 203MM R: 180MM	BB DUB PRESS-FIT MTB 92	NONE	170MM(S) 175MM(M/L/XL)	28.6-44-56-39.8,H=9.5,-SEALED BEARING	40MM(S,M) 50MM(L,XL)	800MM	31.6X400(S) ; 31.6X458(M) ; 31.6X498(L/XL)	34.9	205x65	30X8
SCO Bike Ransom 930	F: 203MM R: 180MM	BB DUB PRESS-FIT MTB 92	NONE	170MM(S) 175MM(M/L/XL)	28.6-44-56-39.8, H=9.5,S.BEARING	40MM(S,M) 50MM(L,XL)	800MM	31.6X412(S) ; 31.6X459(M) ; 31.6X499(L/XL)	34.9	205x65	30X8
SCO Bike Gambler 900 Tuned	203MM	BB DUB PF MTB 107 (MTB/DH: 107MM)	NONE	165MM	GAMBLER 1.5"-1.1/8" ACB BEARINGS	50MM	800MM	31.6X350	34.9	225X75	50X8
SCO Bike Gambler 910	203MM	BB DUB PF MTB 107 (MTB/DH: 107MM)	NONE	165MM	GAMBLER 1.5"-1.1/8" ACB BEARINGS LOGO	50MM	800MM	31.6X350	34.9	225X75	50X8
SCO Bike Gambler 920	203MM	BB DUB PF MTB 107 (MTB/DH: 107MM)	NONE	165MM	GAMBLER 1.5"-1.1/8" ACB BEARINGS LOGO	50MM	800MM	31.6X350	34.9	225X75	50X8
SCO Bike Gambler 930	203MM	BB107/104-24MM, 41MM PRESS-FIT	NONE	165MM	GAMBLER 1.5"-1.1/8" ACB BEARINGS LOGO	50MM	800MM	31.6X350	34.9	225X75	50X8
SCO Bike Aspect 910	180MM	BB-DUB-PRESS FIT BB DUB PF MTB 89.5MM	NONE	170mm (XS/S) 175mm (M/L/XL/XXL)	1-1/8"-1.5"X44X56X-39.8mm	50MM	720mm	31.6X350	35	NONE	NONE
SCO Bike Aspect 920	180MM	Shimano BB-MT500-PA	Shimano FD-M510-M	170mm (XS/S) 175mm (M/L/XL/XXL)	1-1/8"-1.5"X44X56X-39.8mm	50(XS)/60 (S) 70 (M)/80 (L) 90 (XL)/100(XXL)	720mm	31.6X350	35	NONE	NONE
SCO Bike Aspect 930 pearl white	180MM	BSA BB68/73MM	Shimano FD-M4100-M	170mm (XS/S) 175mm (M/L/XL/XXL)	1-1/8"x49.8x44x30MM	50(XS)/60 (S) 70 (M)/80 (L) 90 (XL)/100(XXL)	720mm	31.6X350	35	NONE	NONE
SCO Bike Aspect 930 stellar blue	180MM	BSA BB68/73MM	Shimano FD-M4100-M	170mm (XS/S) 175mm (M/L/XL/XXL)	1-1/8"x49.8x44x30MM	50(XS)/60 (S) 70 (M)/80 (L) 90 (XL)/100(XXL)	720mm	31.6X350	35	NONE	NONE

	Max Rotor Size	BB-spec	F.Derailleur spec	Crankarm	Headset	Stem Length	Bar Width	Seatpost	Seatpost Clamp	Rear Shock (e2e)	Hardware Shock
SCO Bike Aspect 940 granite	180MM	Included crank-set BSA 73MM	Shimano FD-M3120-M	170mm (XS/S) 175mm (M/L/XL/XXL)	1-1/8"x49.8x44x30MM	50(XS)/60 (S) 70 (M)/80 (L) 90 (XL)/100(XXL)	720mm	31.6X350	35	NONE	NONE
SCO Bike Aspect 940 orange	180MM	Included crank-set BSA 73MM	Shimano FD-M3120-M	170mm (XS/S) 175mm (M/L/XL/XXL)	1-1/8"x49.8x44x30MM	50(XS)/60 (S) 70 (M)/80 (L) 90 (XL)/100(XXL)	720mm	31.6X350	35	NONE	NONE
SCO Bike Aspect 950 slate grey	180MM	Included crank-set BSA 73MM	Shimano FD-M2020-TS	170mm (XS/S) 175mm (M/L/XL/XXL)	1-1/8"x49.8x44x30MM	50(XS)/60 (S) 70 (M)/80 (L) 90 (XL)/100(XXL)	720mm	31.6X350	35	NONE	NONE
SCO Bike Aspect 950 smith green	180MM	Included crank-set BSA 73MM	Shimano FD-M2020-TS	170mm (XS/S) 175mm (M/L/XL/XXL)	1-1/8"x49.8x44x30MM	50(XS)/60 (S) 70 (M)/80 (L) 90 (XL)/100(XXL)	720mm	31.6X350	35	NONE	NONE
SCO Bike Aspect 960 dark grey	180MM	FP-B908N 122.5/73	Shimano FD-M315-TS	170mm (XS/S) 175mm (M/L/XL/XXL)	1-1/8"x49.8x44x30MM	60 (XS/S/M) 75 (L) 90 (XL/XXL)	720mm	31.6X350	35	NONE	NONE
SCO Bike Aspect 960 red	180MM	FP-B908N 122.5/73	Shimano FD-M315-TS	170mm (XS/S) 175mm (M/L/XL/XXL)	1-1/8"x49.8x44x30MM	60 (XS/S/M) 75 (L) 90 (XL/XXL)	720mm	31.6X350	35	NONE	NONE

	Max Rotor Size	BB-spec	F.Derailleur spec	Crankarm	Headset	Stem Length	Bar Width	Seatpost	Seatpost Clamp	Rear Shock (e2e)	Hardware Shock
SCO Bike Aspect 970 stellar blue	180MM	FP-B902N/ 120mm/73mm	Shimano FD-TY300	170mm (XS/S) 175mm (M/L/ XL/XXL)	1-1/8"x49.8x44x30MM	60 (XS/S/M) 75(L) 90 (XL/XXL)	720mm	31.6x350	35mm	NONE	NONE
SCO Bike Aspect 970 yellow	180MM	FP-B902N/ 120mm/73mm	Shimano FD-TY300	170mm (XS/S) 175mm (M/L/ XL/XXL)	1-1/8"x49.8x44x30MM	60 (XS/S/M) 75 (L) 90 (XL/XXL)	720mm	31.6x350	35mm	NONE	NONE
SCO Bike Aspect 740 granite	180MM	Included crankset BSA 73	Shimano FD-M3120-M	170mm (XS/S) 175mm (M/L/ XL/XXL)	1-1/8"x49.8x44x30MM	50(XS)/60 (S) 70 (M)/80 (L)	720mm	31.6x350	35mm	NONE	NONE
SCO Bike Aspect 740 orange	180MM	Included crankset BSA 73	Shimano FD-M3120-M	170mm (XS/S) 175mm (M/L)	1-1/8"x49.8x44x30MM	50(XS)/60 (S) 70 (M)/80 (L)	720mm	31.6x350	35mm	NONE	NONE
SCO Bike Aspect 750 slate grey	180MM	Included crankset BSA 73	Shimano FD-M2020-TS	170mm (XS/S) 175mm (M/L)	1-1/8"x49.8x44x30MM	50(XS)/60 (S) 70 (M)/80 (L)	720mm	31.6x350	35mm	NONE	NONE
SCO Bike Aspect 750 smith green	180MM	Included crankset BSA 73	Shimano FD-M2020-TS	170mm (XS/S) 175mm (M/L)	1-1/8"x49.8x44x30MM	50(XS)/60 (S) 70 (M)/80 (L)	720mm	31.6x350	35mm	NONE	NONE
SCO Bike Aspect 760 dark grey	180MM	22.5mm/73mm	Shimano FD-M315-TS	170mm (XS/S) 175mm (M/L)	1-1/8"x49.8x44x30MM	60 (XS/S/M) 75 (L/XL)	720mm	31.6x350	35mm	NONE	NONE
SCO Bike Aspect 760 red	180MM	22.5mm/73mm	Shimano FD-M315-TS	170mm (XS/S) 175mm (M/L)	1-1/8"x49.8x44x30MM	60 (XS/S/M) 75 (L/XL)	720mm	31.6x350	35mm	NONE	NONE
SCO Bike Aspect 770 stellar blue	180MM	FP-B902N/ 120mm/73mm	Shimano FD-TY300	170mm (XS/S) 175mm (M/L)	1-1/8"x49.8x44x30MM	60 (XS/S/M) 75 (L/XL)	720mm	31.6x350	35mm	NONE	NONE
SCO Bike Aspect 770 yellow	180MM	FP-B902N/ 120mm/73mm	Shimano FD-TY300	170mm (XS/S) 175mm (M/L)	1-1/8"x49.8x44x30MM	60 (XS/S/M) 75(L/XL)	720mm	331.6x350	35mm	NONE	NONE

	Max Rotor Size	BB-spec	F.Derailleur spec	Crankarm	Headset	Stem Length	Bar Width	Seatpost	Seatpost Clamp	Rear Shock (e2e)	Hardware Shock
SCO Bike Contessa Scale 910	"FRONT: 180MM REAR: 160MM"	MTB 92 BB-MT500-PA	NONE	"170MM(S/M) / 175MM(L)"	1-1/8"-1.5" TAPER FORK	50MM (S) / 60mm(M) / 70mm(L)	700mm	31.6mmx400mm	34.9mm	NONE	NONE
SCO Bike Contessa Scale 920	"FRONT: 180MM REAR: 160MM"	MTB 92 BB-MT500-PA	NONE	"170MM(S/M) / 175MM(L)"	1-1/8"-1.5" TAPER FORK	50MM (S) / 60mm(M) / 70mm(L)	700mm	31.6mmx400mm	34.9mm	NONE	NONE
SCO Bike Contessa Scale 930	"FRONT: 180MM REAR: 160MM"	BB DUB PRESS FIT MTB 92	NONE	"170MM(S/M) / 175MM(L)"	1-1/8"-1.5" TAPER FORK	50MM (S) / 60mm(M) / 70mm(L)	700mm	31.6mmx400mm	34.9mm	NONE	NONE
SCO Bike Contessa Spark RC 900 WC	"FRONT: 180MM REAR: 160MM"	BB DUB PRESSFIT MTB 92	NONE	"170MM(S/M) 175MM(L)"	28.6-44-56/-39.8, H=4.9,	60MM(S/M) ; 70MM(L)	740MM	31.6X400MM	34.9MM	165x40MM	20x10MM
SCO Bike Contessa Spark RC 900 Comp	"FRONT: 180MM REAR: 160MM"	BB DUB PRESSFIT MTB 92	NONE	"170MM(S/M) 175MM(L)"	28.6-44-56/-39.8, H=4.9,	50MM(S) ; 60MM(M) ; 70MM(L)	740MM	31.6X400MM	34.9MM	165x40MM	20x10MM
SCO Bike Contessa Spark 910	180MM	BB DUB PRESSFIT MTB 92	NONE	"170MM(S/M) 175MM(L)"	28.6-44-56/-39.8, H=4.9,	50MM(S/M) ; 70MM(L)	740MM	31.6X357MM (S) ; 31.6X400MM (M/L)	34.9MM	165x45MM	20x10MM
SCO Bike Contessa Spark 920	180MM	BB DUB PRESSFIT MTB 92	NONE	"170MM(S/M) 175MM(L)"	28.6-44-56/-39.8, H=4.9,	50MM(S/M) ; 70MM(L)	740MM	31.6X357MM (S) ; 31.6X412MM (M/L)	34.9MM	165x45MM	20x10MM
SCO Bike Contessa Spark 930	180MM	MT500-PA	NONE	"170MM(S/M) 175MM(L)"	SYNCROS 1-1/8"-1.5" 55-61MM H:8.2	50MM(S/M) ; 70MM(L)	740MM	31.6X357MM (S) ; 31.6X412MM (M/L)	34.9MM	165x45MM	20x10MM
SCO Bike Contessa Genius 910	"FRONT: 203MM REAR: 180MM"	BB DUB PRESSFIT MTB 92	NONE	"170MM(S/M) 175MM(L)"	FP-H856F1, 28.6-44-56-39.8,H=9	50MM	780MM	"31.6X357MM(S) ; 31.6X412MM(M) ; 31.6X459MM(L)"	34.9MM	185x55MM	30X8MM
SCO Bike Contessa Genius 920	"FRONT: 203MM REAR: 180MM"	BB DUB PRESSFIT MTB 92	NONE	"170MM(S/M) 175MM(L)"	FP-H856F1, 28.6-44-56-39.8,H=9	50MM	780MM	"31.6X361MM(S) ; 31.6X425MM(M) ; 31.6X470MM(L)"	34.9MM	185x55MM	30X8MM

	Max Rotor Size	BB-spec	F.Derailleur spec	Crankarm	Headset	Stem Length	Bar Width	Seatpost	Seatpost Clamp	Rear Shock (e2e)	Hardware Shock
SCO Bike Contessa Ransom 910	"FRONT: 203MM REAR: 180MM"	BB DUB PRESSFIT MTB 92	NONE	"170MM(S/M) 175MM(L)"	28.6-44-56-39.8,H=9.5,	40MM(S/M) ; 50MM(L)	800MM	"31.6X363MM(S) ; 31.6X418MM(M) ; 31.6X475MM(L)"	34.9MM	205x65MM	30X8MM
SCO Bike Contessa Scale 940 (EU)	180mm	BB-MT500 41x89.5	None	170/170/175	1-1/8"-1.5" TAPER FORK	50/60/70	700	31.6mmx400mm	34.9MM	NONE	NONE
SCO Bike Contessa Scale 950 (EU)	180mm	Sram DUB PF 41x92	None	170/170/175	1-1/8"-1.5" TAPER FORK	50/60/70	700	31.6mmx400mm	34.9MM	NONE	NONE
SCO Bike Contessa Active 10	180MM	BB-MT500 89.5/92MM	Shimano FD-M5100-M	170MM(X-S/S/M) / 175MM(L)	1-1/8"~1.5"X44X56X-39.8MM	50MM(XS/S) / 60MM (M/L)	680mm	31.6mmx350mm	35mm	NONE	NONE
SCO Bike Contessa Active 20	180MM	"SM-BB52 BSA68/73MM ASMBB52B"	Shimano FD-M4100-M	170MM(X-S/S/M) / 175MM(L)	1-1/8"~1.5"X44X56X-39.8MM	50MM(XS/S) / 60MM (M/L)	680mm	31.6mmx350mm	35mm	NONE	NONE
SCO Bike Contessa Active 30	180MM	Incl. in crank set FC-MT210-2	Shimano FD-M3120-M	170MM(X-S/S/M) / 175MM(L)	1-1/8"~1.5"X44X56X-39.8MM	50MM(XS/S) / 60MM (M/L)	680mm	31.6mmx350mm	35mm	NONE	NONE
SCO Bike Contessa Active 40 purple	180MM	Incl. in crank set FC-MT210-2	Shimano FD-M2020-TS	170MM(X-S/S/M) / 175MM(L)	1-1/8"~1.5"X44X56X-39.8MM	50MM(XS/S) / 60MM (M/L)	680mm	31.6mmx350mm	35mm	NONE	NONE
SCO Bike Contessa Active 40 blue	180MM	Incl. in crank set FC-MT210-2	Shimano FD-M2020-TS	170MM(X-S/S/M) / 175MM(L)	1-1/8"~1.5"X44X56X-39.8MM	50MM(XS/S) / 60MM (M/L)	680mm	31.6mmx350mm	35mm	NONE	NONE
SCO Bike Contessa Active 50 brick red	180MM	FP-B908N 122.5mm/ 73mm	Shimano FD-M315-TS	170MM(X-S/S/M) / 175MM(L)	1-1/8"~1.5"X44X56X-39.8MM	60mm (XS/S/M/L)	680mm	31.6mmx350mm	35mm	NONE	NONE
SCO Bike Contessa Active 50 teal grn	180MM	FP-B908N 122.5mm/ 73mm	Shimano FD-M315-TS	170MM(X-S/S/M) / 175MM(L)	1-1/8"~1.5"X44X56X-39.8MM	60mm (XS/S/M/L)	680mm	31.6mmx350mm	35mm	NONE	NONE
SCO Bike Contessa Active 60	180MM	FP-B902N 124.5mm/ 73mm	Shimano FD-TY300	170MM(X-S/S/M) / 175MM(L)	1-1/8"~1.5"X44X56X-39.8MM	60mm (XS/S/M/L)	680mm	31.6mmx350mm	35mm	NONE	NONE

FOIL



The Foil Disc for MY21 has a revised fork (1 - 1 1/4), headset and Spacers.
The Main Frame stays the same as previous years.
The Handlebars follow the Addict RC from MY20.
Cable routing also follows the same proceedure as the Addict RC MY20.
30MM Tire Compatibility.

There will be three kits for the headset assembly.

Purple Kit will included all parts,
285823 SCO Headset Foil 21
Yellow Kit will be all the spacers,
282761 SCO Stem spacer kit Crest IC Foil 1" 21
Green Kit we will be just the cover cap,
283357 SCO Stem steerer cap Crest IC Foil 1" 21

The fork steerer expander is only availalbe with the Purple Kit.

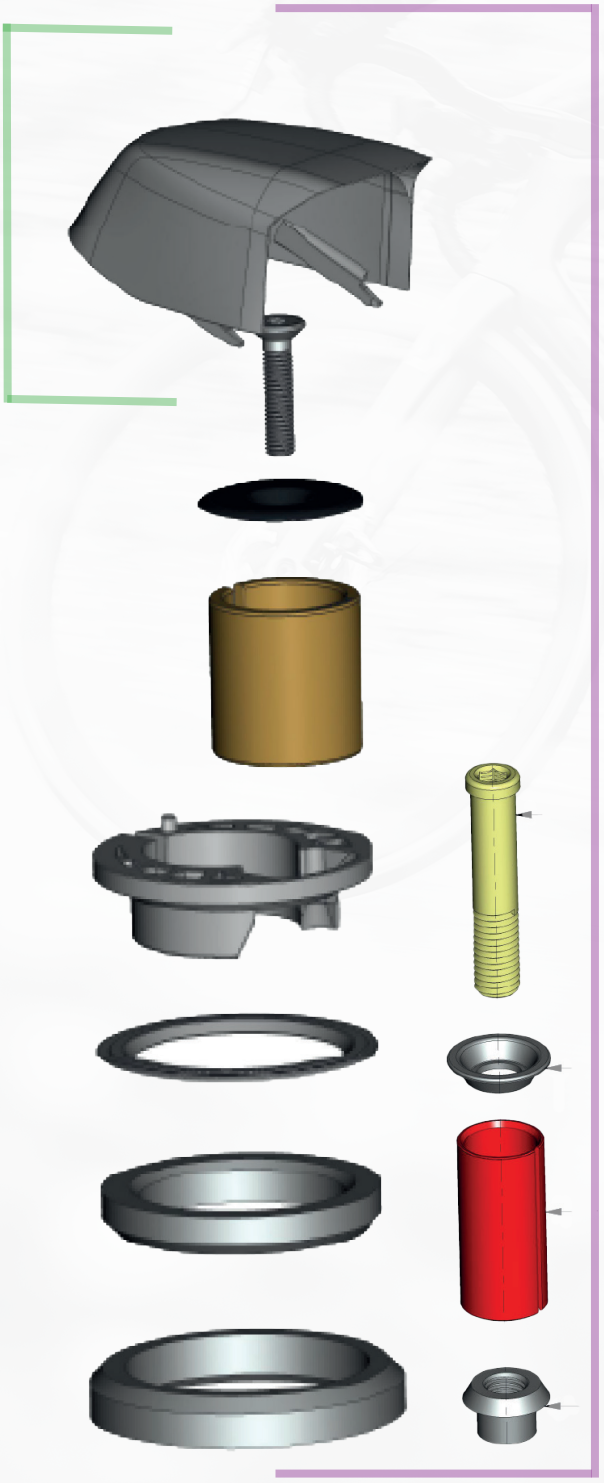

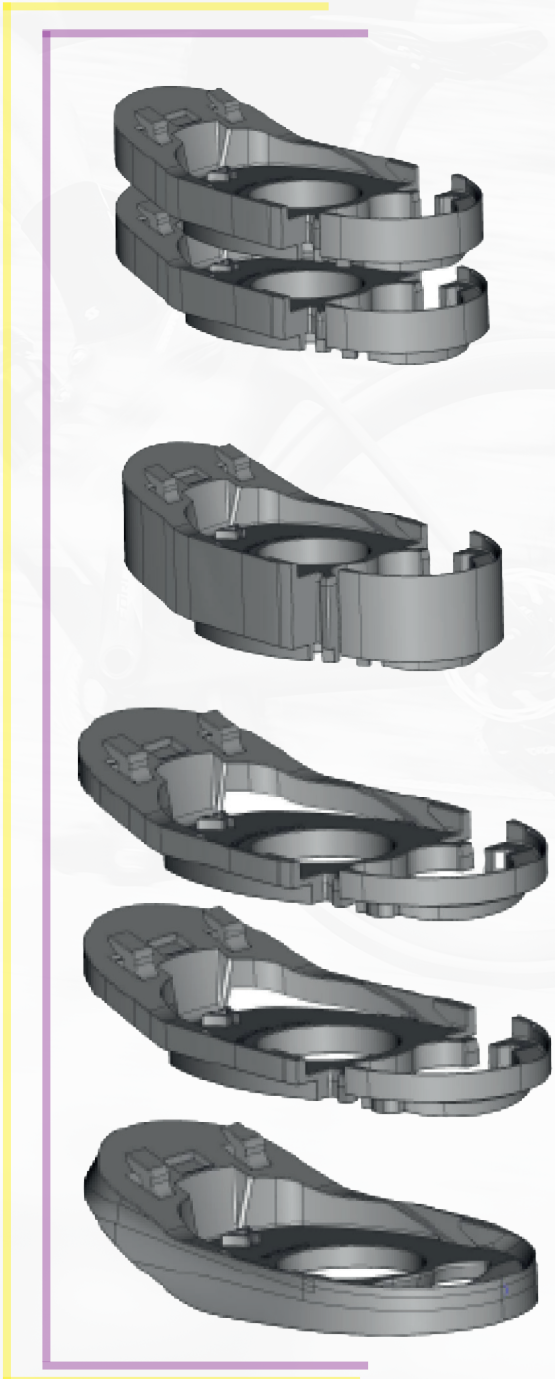

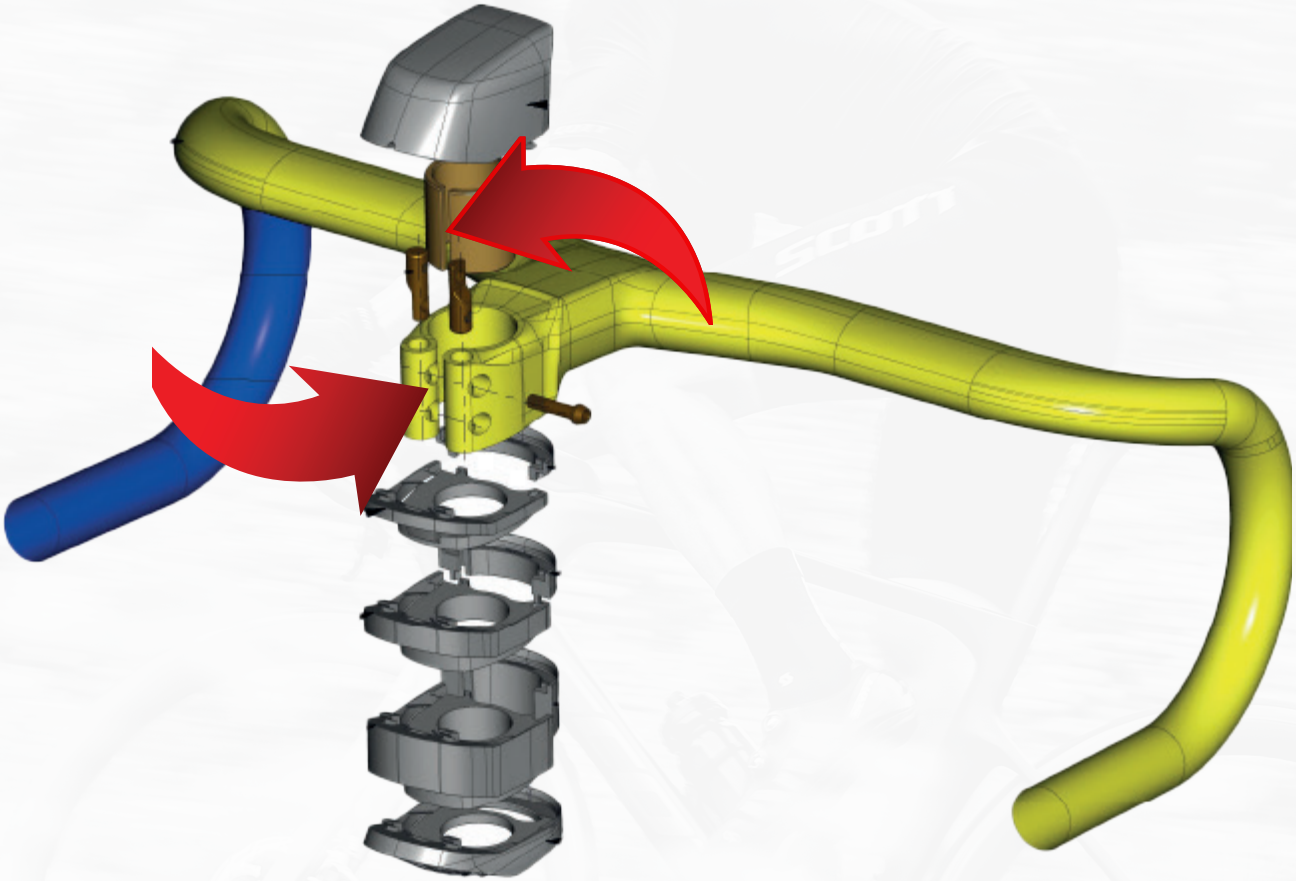

⚠When assembling the handlebar & handlebar shim to the fork steerer, make sure the shim and the clamp opening of the handlebar are aligned.

⚠Handlebar Clamp Bolt Torque: 6Nm

FOIL PRO



ITEM	DESCRIPTION
282620	SCO Fork Foil Pro 21 Wty
285823	SCO Headset Foil 21
283357	SCO Stem steerer cap Crest IC Foil 1" 21
282761	SCO Stem spacer kit Crest IC Foil 1" 21
275409	SYN Bar/Stem Creston iC SL, 380mm
275410	SYN Bar/Stem Creston iC SL, 400mm
275411	SYN Bar/Stem Creston iC SL, 420mm
275412	SYN Bar/Stem Creston iC SL, 440mm
242476	SCO Seatclamp Foil 16
266621	SCO Seatpost Foil PR Wty 18
270199	SYN Saddle Belcarra V 1.0 Cut Out
283341	SCO Axle Foil/Addict/Speedster D F 21
283340	SCO Axle Foil/Addict/Speedster D R 21
272454	SCO Spoke rep kit SY Merr/Cap 1.0 50D
278392	SCO Rim SY Capital 1.0 50D 24H 20
271246	SCO Hub rep kit SY Merr/Cap 1.0D F
271247	SCO Hub rep kit SY Merr/Cap 1.0D R
264483	SCO Dropout hanger 142x12 DM Addict D 17
266586	SCO Cableguide set Foil D mec/Di2 18
242465	SCO Chainsuck protector Foil 16
221654	FD-Mount Adapter Plate Foil 2011
235290	DI2 Int.Bat.holder. 31.6 DIS-23 Foil

FOIL 10



ITEM	DESCRIPTION
282617	SCO Fork Foil 10 21 Wty
285823	SCO Headset Foil 21
283357	SCO Stem steerer cap Crest IC Foil 1" 21
282761	SCO Stem spacer kit Crest IC Foil 1" 21
275409	SYN Bar/Stem Creston iC SL, 380mm
275410	SYN Bar/Stem Creston iC SL, 400mm
275411	SYN Bar/Stem Creston iC SL, 420mm
275412	SYN Bar/Stem Creston iC SL, 440mm
242476	SCO Seatclamp Foil 16
266621	SCO Seatpost Foil PR Wty 18
270201	SYN Saddle Belcarra V 2.0 Cut Out
283341	SCO Axle Foil/Addict/Speedster D F 21
283340	SCO Axle Foil/Addict/Speedster D R 21
272454	SCO Spoke rep kit SY Merr/Cap 1.0 50D
278392	SCO Rim SY Capital 1.0 50D 24H 20
271246	SCO Hub rep kit SY Merr/Cap 1.0D F
282722	SCO Hub rep kit SCT-1426 R XDR 21
239530	Dropout hanger Solace Disc '15<
266586	SCO Cableguide set Foil D mec/Di2 18
242465	SCO Chainsuck protector Foil 16
221654	FD-Mount Adapter Plate Foil 2011

FOIL 20FOIL 30



ITEM	DESCRIPTION
282618	SCO Fork Foil 20 21 Wty
285823	SCO Headset Foil 21
283357	SCO Stem steerer cap Crest IC Foil 1" 21
282761	SCO Stem spacer kit Crest IC Foil 1" 21
275409	SYN Bar/Stem Creston iC SL, 380mm
275410	SYN Bar/Stem Creston iC SL, 400mm
275411	SYN Bar/Stem Creston iC SL, 420mm
275412	SYN Bar/Stem Creston iC SL, 440mm
242476	SCO Seatclamp Foil 16
266621	SCO Seatpost Foil PR Wty 18
270201	SYN Saddle Belcarra V 2.0 Cut Out
283341	SCO Axle Foil/Addict/Speedster D F 21
283340	SCO Axle Foil/Addict/Speedster D R 21
266592	SCO Spoke Sy/Form rep kit RR2.0 Disc 18
266814	SCO Rim SY/Form RR2.0 D 28H 18
271260	SCO Hub rep kit Form TXC-712 F 19
271259	SCO Hub rep kit From TXC-142A R 19
264483	SCO Dropout hanger 142x12 DM Addict D 17
266586	SCO Cableguide set Foil D mec/Di2 18
242465	SCO Chainsuck protector Foil 16
221654	FD-Mount Adapter Plate Foil 2011
235290	DI2 Int.Bat.holder. 31.6 DIS-23 Foil



ITEM	DESCRIPTION
282619	SCO Fork Foil 30 21 Wty
285823	SCO Headset Foil 21
283357	SCO Stem steerer cap Crest IC Foil 1" 21
282761	SCO Stem spacer kit Crest IC Foil 1" 21
275409	SYN Bar/Stem Creston iC SL, 380mm
275410	SYN Bar/Stem Creston iC SL, 400mm
275411	SYN Bar/Stem Creston iC SL, 420mm
275412	SYN Bar/Stem Creston iC SL, 440mm
242476	SCO Seatclamp Foil 16
266621	SCO Seatpost Foil PR Wty 18
270201	SYN Saddle Belcarra V 2.0 Cut Out
283341	SCO Axle Foil/Addict/Speedster D F 21
283340	SCO Axle Foil/Addict/Speedster D R 21
266592	SCO Spoke Sy/Form rep kit RR2.0 Disc 18
266814	SCO Rim SY/Form RR2.0 D 28H 18
271260	SCO Hub rep kit Form TXC-712 F 19
271259	SCO Hub rep kit From TXC-142A R 19
264483	SCO Dropout hanger 142x12 DM Addict D 17
266586	SCO Cableguide set Foil D mec/Di2 18
242465	SCO Chainsuck protector Foil 16
221654	FD-Mount Adapter Plate Foil 2011

PLASMA 6



Technical Data
Plasma 6

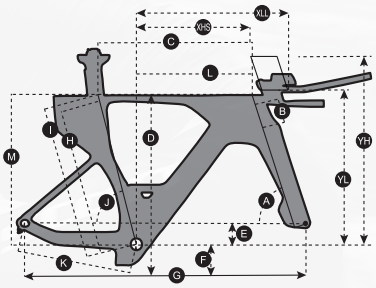

Headtube Diameter:
1 1/4” - 1 1/4” Drop In IS52/31.8 - IS46/34

BB Housing: **PF BB 86**

Max. Tyre Size Front and Rear: **30mm**

Rear Tyre Clearance Behind Seat tube: **Minimum 5mm**

Seatpost Saddle Clamps: **7x7mm, 8x8.5mm, 7x9.6mm**

Shifting: Electronic, **Di2, Sram AXS**

Max Brake Disc Size Front and Rear: **160mm**

Geometry	XS/49	S/52	M/54	L/56	XL/58
head tube angle	72.5 °	72.5 °	72.5 °	72.5 °	72.5 °
head tube length	71.5 mm	115.0 mm	135.0 mm	155.0 mm	175.0 mm
top tube horizontal	509.3 mm	529.3 mm	555.8 mm	582.9 mm	609.5 mm
standover height	746.0 mm	746.0 mm	795.8 mm	815.8 mm	831.1 mm
BB offset	-75.0 mm	-75.0 mm	-75.0 mm	-75.0 mm	-75.0 mm
BB height	261.0 mm	261.0 mm	261.0 mm	261.0 mm	261.0 mm
wheel base	962.0 mm	982.0 mm	1,011.7 mm	1,043.0 mm	1,072.8 mm
BB center to toptube center	493.0 mm	493.0 mm	542.4 mm	562.3 mm	577.5 mm
BB center to top of seattube	503.0 mm	503.0 mm	552.4 mm	572.3 mm	587.5 mm
seat angle	75.2 °	75.2 °	75.2 °	75.2 °	75.2 °
chainstay	410.0 mm	410.0 mm	410.0 mm	410.0 mm	410.0 mm
reach	372.5 mm	392.5 mm	417.5 mm	442.5 mm	467.5 mm
stack	520.0 mm	520.0 mm	535.0 mm	554.8 mm	570.1 mm
chainstay MIN	403.0 mm	403.0 mm	403.0 mm	403.0 mm	403.0 mm
chainstay MAX	413.0 mm	413.0 mm	413.0 mm	413.0 mm	413.0 mm
Pads stack LOW	540.0 mm	540.0 mm	555.0 mm	575.0 mm	590.0 mm
Pads stack HIGH	660.0 mm	660.0 mm	675.0 mm	695.0 mm	710.0 mm
Pads reach HIGH/SHORT	362.2 mm	382.2 mm	407.2 mm	432.2 mm	457.2 mm
Pads reach LOW/LONG	500.0 mm	520.0 mm	545.0 mm	570.0 mm	595.0 mm

For riding, transporting, or storing your Plasma 6 take note of the limited turning rotation of the handlebars and fork. Do not force them passed 45 degrees.



Handlebars & Cockpit

For the full installation of the handlebars and cockpit a video will be supplied separately.

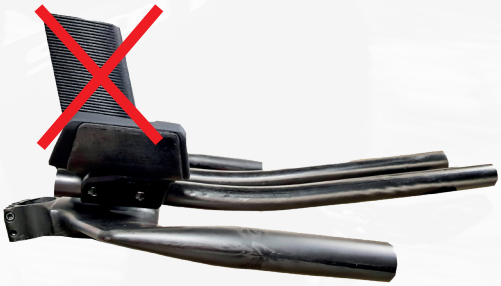

⚠Do not ride the bike without cutting the central mast to the correct length.

Also make sure that the position is compatible with the base handlebars you are using. Both flat and elevated are available.



Make sure the arm pads
are located with the leading edge forward.
In this position the pads will provide the best support.

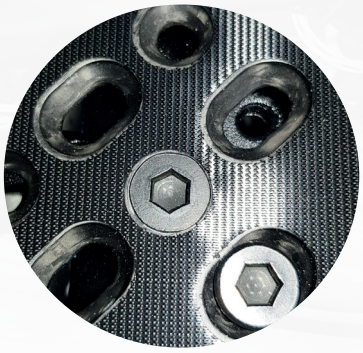

⚠Tighten only two bolts to 5 Nm, with the addition of Blue Loctite.

⚠ If the tri extensions need to be cut down (rear), make sure at least 10mm of the extension is clear of the clamping area.

Rear and Front Dropouts

The rear dropout on the drive side has four separate parts.

Outer Plate A
Inner Plate B Direct & none Direct.

Adjustable End Cap C and the Adjustable End Cap security
bolt D

The Outer plate can be moved forward and backwards on the Inner Plate, to allow for the adjustment of the rear wheel in the frame. ⚠ 5mm minimum wheel clearance to rear of the seat tube.

You must always locate the Outer Plate in the grooves in the Inner Plate. The Outer Plate can be rotated 180 degree to accomodate a range from 0 to 10 mm.

The Adjustable End Cap must also be rotated to match the number on the Outer Plate, top side.

Then secured in place with the Adjustable End Cap security bolt.

⚠Torques for dropout bolts E an F: 3 Nm For D 1Nm



The left none drive side dropout can be moved inline with the right side by
adjusting bolt G and sliding the complete unit backwards or forwards.

⚠Adjust the right side dropout before the left.

⚠Torque for Bolt G is: 10 Nm



⚠Rear Through Axle tigthen to 12 Nm



The Front Brake Cover will be magnetic, the same concept as the Addict RC.



The mounting bolts for the front brake are a set sizes.
The Top Bolt (A) is longer than the Bottom Bolt (B).

⚠Bolt (A) is a specific bolt for Shimano Front Brakes (SM-MA Converter Y81743350). (B) standard Shimano Bolt 43mm with security nose.

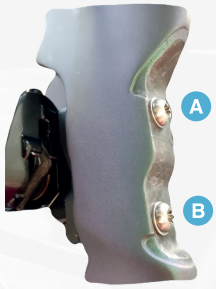

⚠For Sram Front Brakes the standard Sram bolts are ok
(A) 42mm, (B) 37mm. Both with washers.
⚠Torque for both bolts: 6Nm

⚠Front Axle Torque 12Nm



Seatpost Clamp and Saddle Clamp

To adjust the seatpost clamp you do not need to remove the rear
Storage box assembly plate.

((A)⚠Tightening Torque 3Nm)

⚠The seatpost clamp bolts (B) and (C) to be tightened to 5Nm

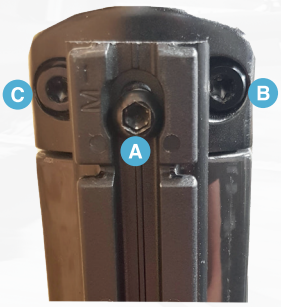

The saddle trail clamp with be the Standard Ritchey WCS system.
Clamp sizes available in 7 x7, 7x9.6, and 8x8.5.
All available aftermarket from Ritchey.



Hydration System

The Plasma 6 has a five section storage and hydration system.
Drinking Fluids can be stored either in the integrated top tube Hydration bottle.
Or low down above the bottom bracket in the Gel Bottle.

Storage is either behind the seat tube or between the handlebar extensions.

All storage and drink systems will be within a frame size specific.



The Gel Bottle can be released from the frame by pressing points A on both side of the frame.

Points B and C are removable. Point B is a cover from the frame and Point C is the mouth piece where you can fill the bottle (removable).

If you wish to use a bottle cage on the downtube, be aware that the access to your Gel Bottle will be impaired.

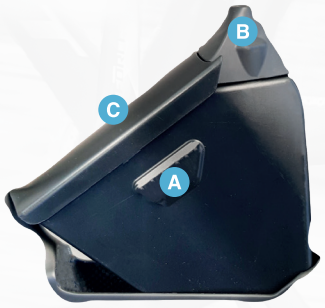

The Storage Box behind the seat tube can be accessed by pressing points A on the lid both sides (lid not pictured).

You can release the box from the mounting by pulling gently point ← and sliding upwards as indicated by point ↑



The Top Tube Hydration Bottle can be released from the frame by pressing ← gently.

First lift the front of the bottle and then the rear as indicated below, A and B

The rear of the bottle is clipped into place by a small retainer.



The Hydration Bottle can be refill whilst in place by lifting the small cap marked C

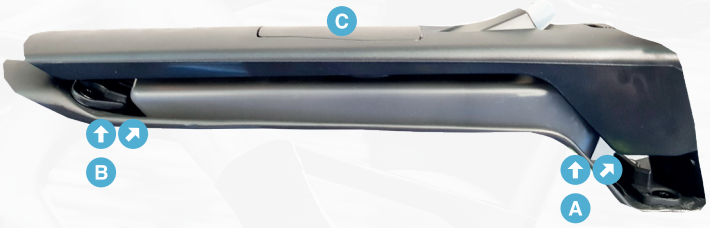

The Nutrition Box between the handlebar extensions can be tilt downwards so you can attached a larger GPS unit.

On the underside of the Nutrition Box you will have a key which will unlock the box.

Clockwise to release, Anti Clockwise to tighten.

⚠ The Sram BlipBox situated inside the Nutrition Box, make sure not to damage the cables when moving the box
Downwards.



The Nutrition Box can also be adjusted upwards and downwards via a screw on the inside of the Nutrition Box.



There is also an additional double bottle cage mount for the rear of the seatpost.

⚠Tighten Torque for A 3Nm and B 5Nm



The seatpost bottle cage mount can be positioned to accommodate large drink bottles.
The full assembly can move
backwards & forwards within a limited range depending on your saddle position.

A & B can be losened to allow the movement of the inner seatpost plate backwards &
forwards.

⚠Tightening torque for these bolts 5Nm

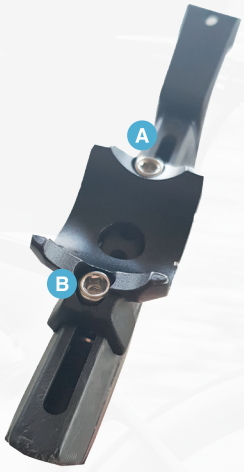

When the saddle clamp base plate is pushed all the way forward you cannot extend the plate.



If the saddle clamp base plate is in the middle or to the rear you will have some additional extention available.

Make sure you always have your saddle within the limiter marks on the saddle trails.



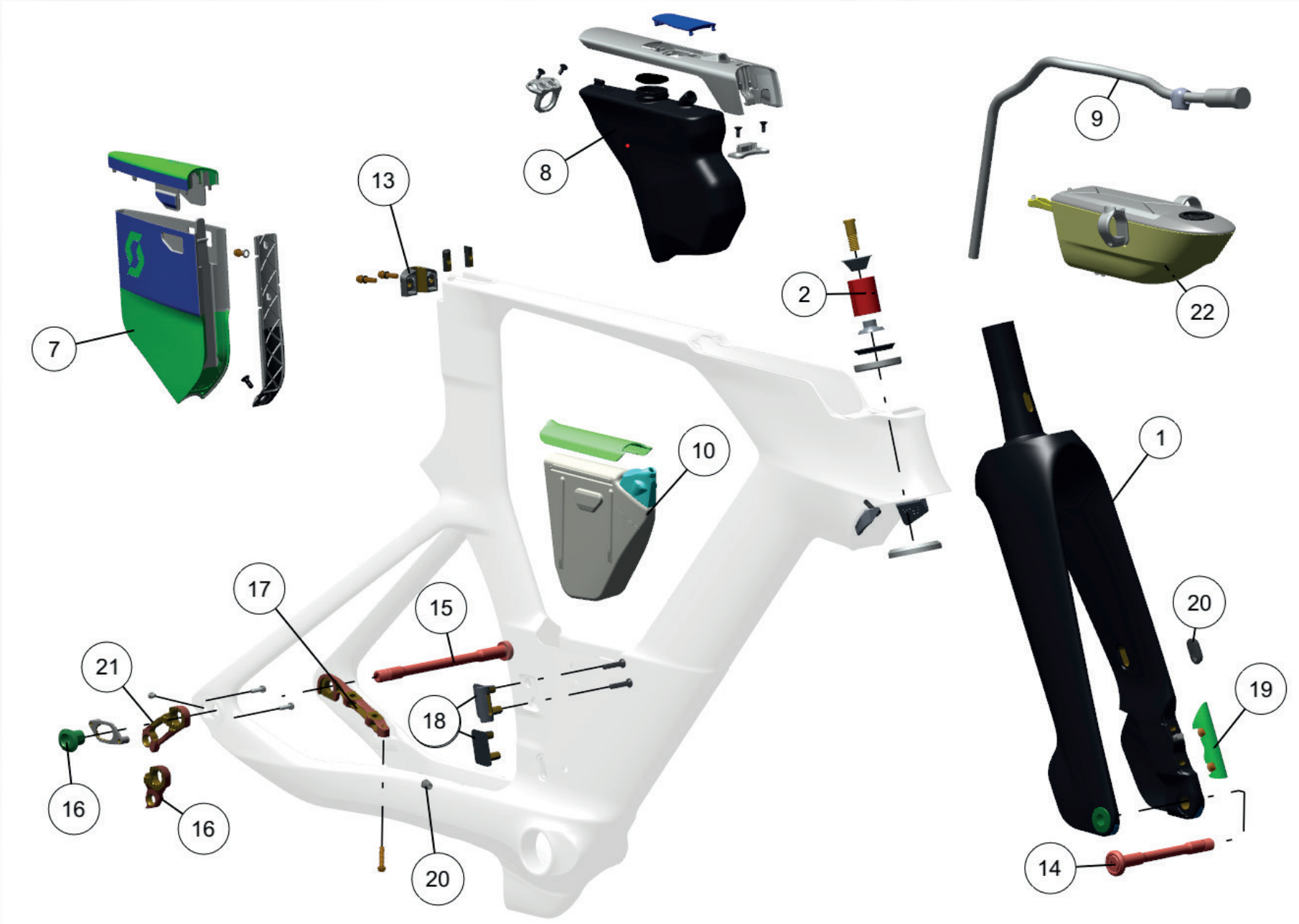
7
13
8
9
22
2
10
1
17
15
21
18
20
19
16
16
20
14

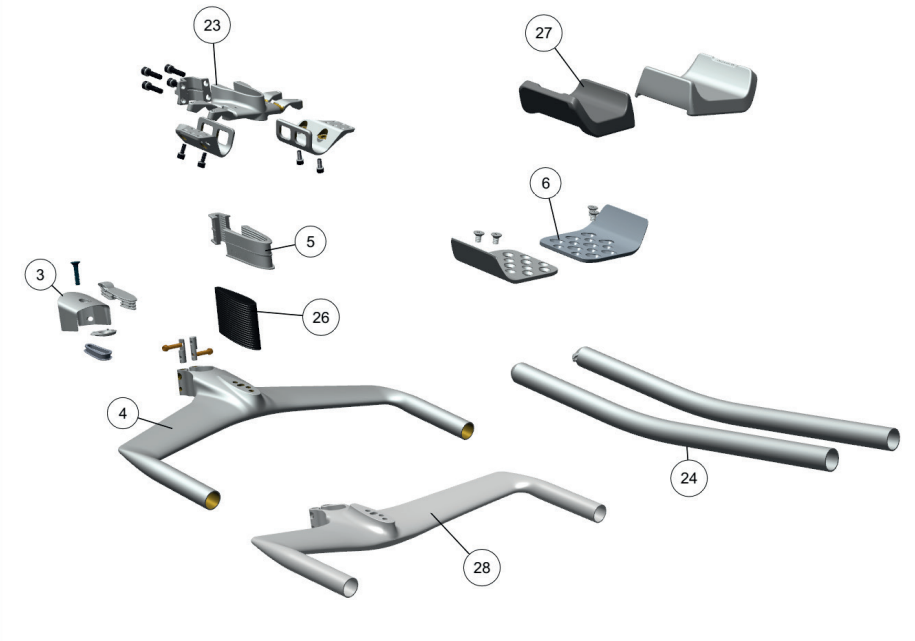

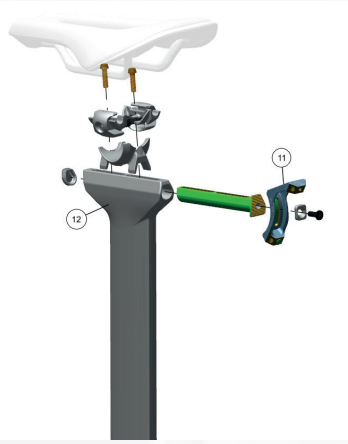

Spare Parts

⚠Please use the explode view against the parts reference below to make sure you order the correct parts.

Item #	Part Number	Description
1	282611	SCO Fork Plasma Premium 21 Wty
1	282612	SCO Fork Plasma RC 21 Wty
2	275467	SYN Headset IS52/31.8 - IS46/34
3	275429	SYN Plasma 6 Top Cap Kit
4	275496	SYN Plasma 6 Bar/Stem Creston iC TRI low
5	275428	SYN Plasma 6 Spacer Angle Adjustment Kit
6	275420	SYN Plasma 6 Arm Pad Brackets
7	280291	SYN Plasma 6 Storage Box
8	280292	SYN Plasma 6 Hydration Bottle
9	280293	SYN Plasma 6 Hydration Bottle Straw Kit
10	280294	SYN Plasma 6 Gel Bottle
11	275423	SYN Plasma 6 Seatpost Bottle Mount
12	275422	SYN Plasma 6 Seatpost Duncan 1.0 Tri
13	282762	SCO Seatclamp Plasma 6 21
14	277028	SCO Axle front Addict RC/Plasma 6 TP 20

Item #	Part Number	Description
15	277029	SCO Axle rear Addict RC/Plasma 6 TP 20
16	282713	SCO Dropout Plasma 6 21
17	282717	SCO Brake mount rear Plasma 6 20
18	282718	SCO FD-mount and blank Plasma 6 21
19	282715	SCO Brake mount cover front Plasma 6 21
20	282712	SCO Cableguide kit Plasma 6 21
21	282714	SCO Dropout Plasma 6 direct mount 21
22	275424	SYN Plasma 6 Between the arms box
23	275417	SYN Plasma 6 Clamp
24	275418	SYN Plasma 6 Extension 12.5° bend
25	275419	SYN Plasma 6 Extension E2 25.0° bend (not shown)
26	275416	SYN Plasma 6 Blade
27	275421	SYN Plasma 6 Arm Pads
28	275414	SYN Plasma 6 Bar/Stem Creston iC TRI hi

CABLE ROUTING

Following pages will be the hose and cable routing for brakes, Di2 and Sram AXS.

Brake hose routing

Rear brake hose

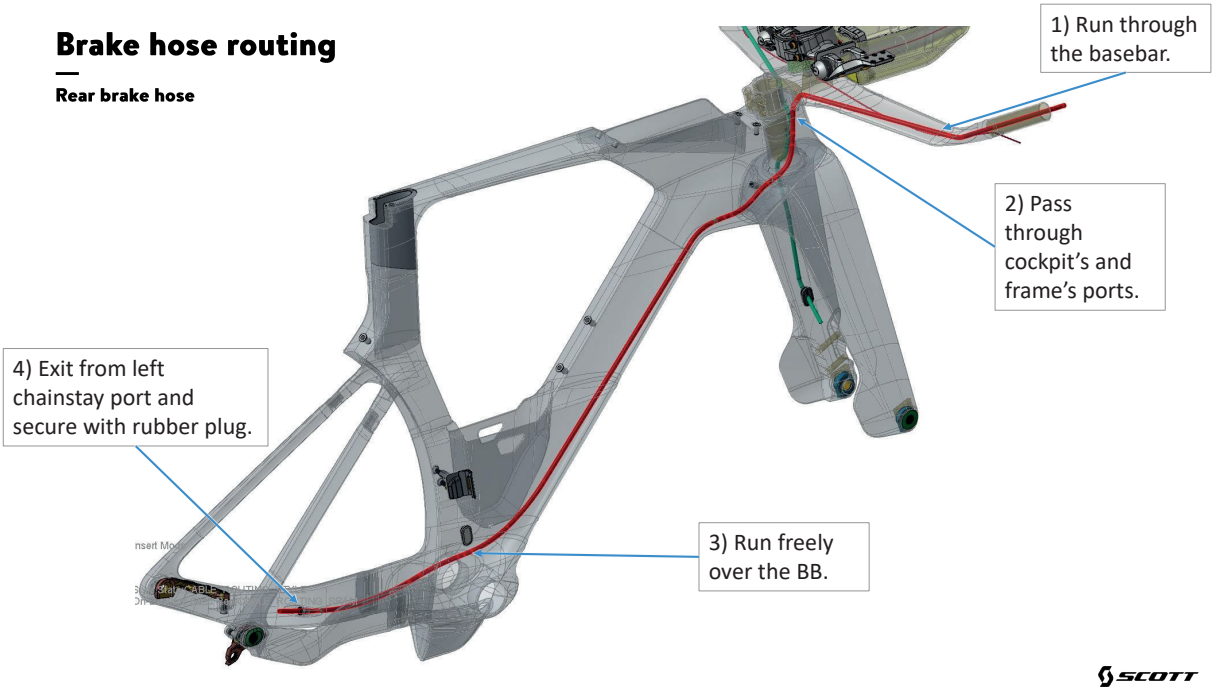

SCOTT

Brake hose routing

Front brake hose

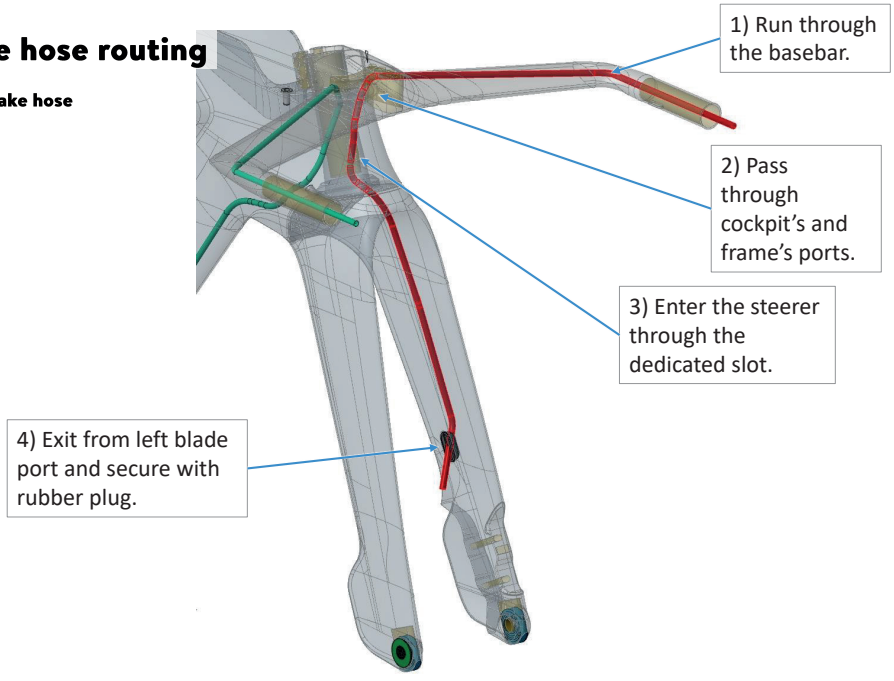

SCOTT

Wire routing – SRAM AXS

BlipBox ports wiring

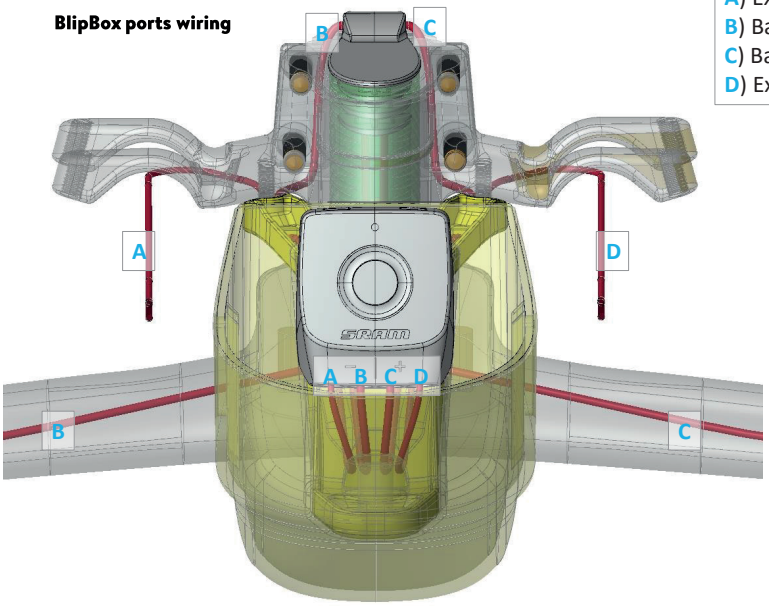

BlipBox ports:
A) Extension - Right
B) Basebar - Right
C) Basebar - Left
D) Extension - Left

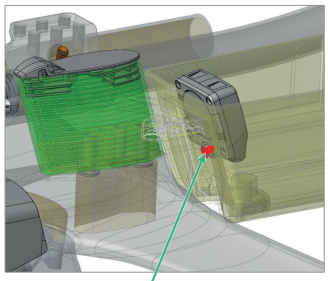

Note:
Fix the Blipbox inside the Nutrition Box with the provided screw

SCOTT

Wire routing – SRAM AXS

Extension wiring – Right side

Left side:
Mirror this guide.
4) plug into D port

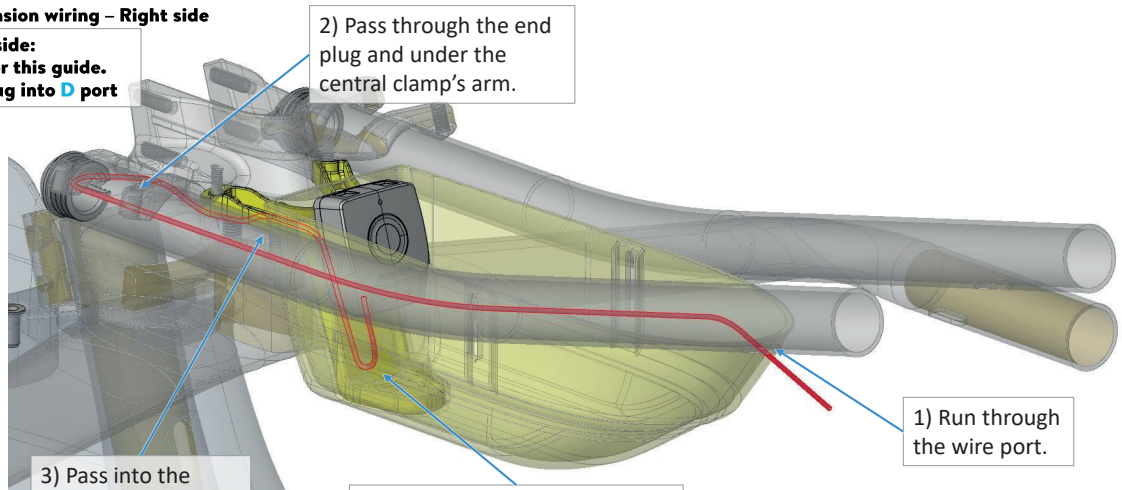

2) Pass through the end plug and under the central clamp's arm.

1) Run through the wire port.

3) Pass into the support's hole and within the channel.

4) Run through the dedicated hole into the Nutrition Box and plug into the Blip Box's A port.

SCOTT

Wire routing – SRAM AXS

Basebar wiring – Right side

Left side:
Mirror this guide.
4) plug into C port

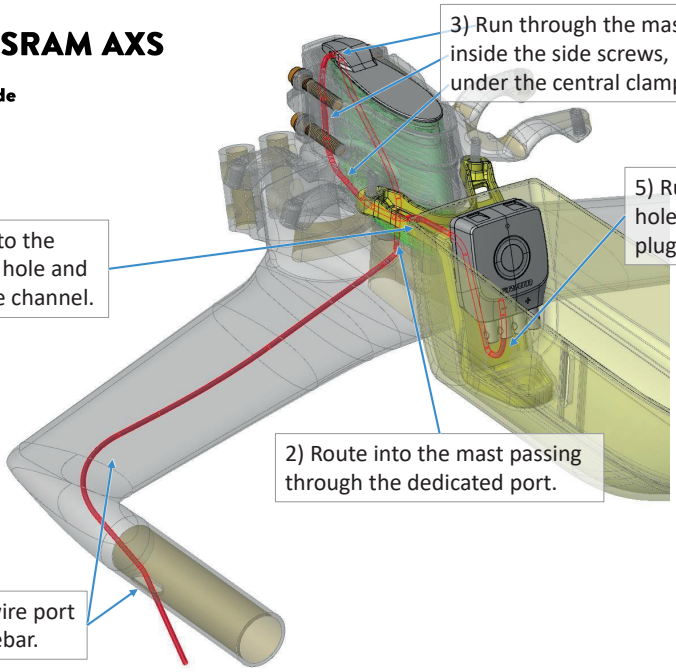

Wire routing – SRAM AXS

Detail view - rear

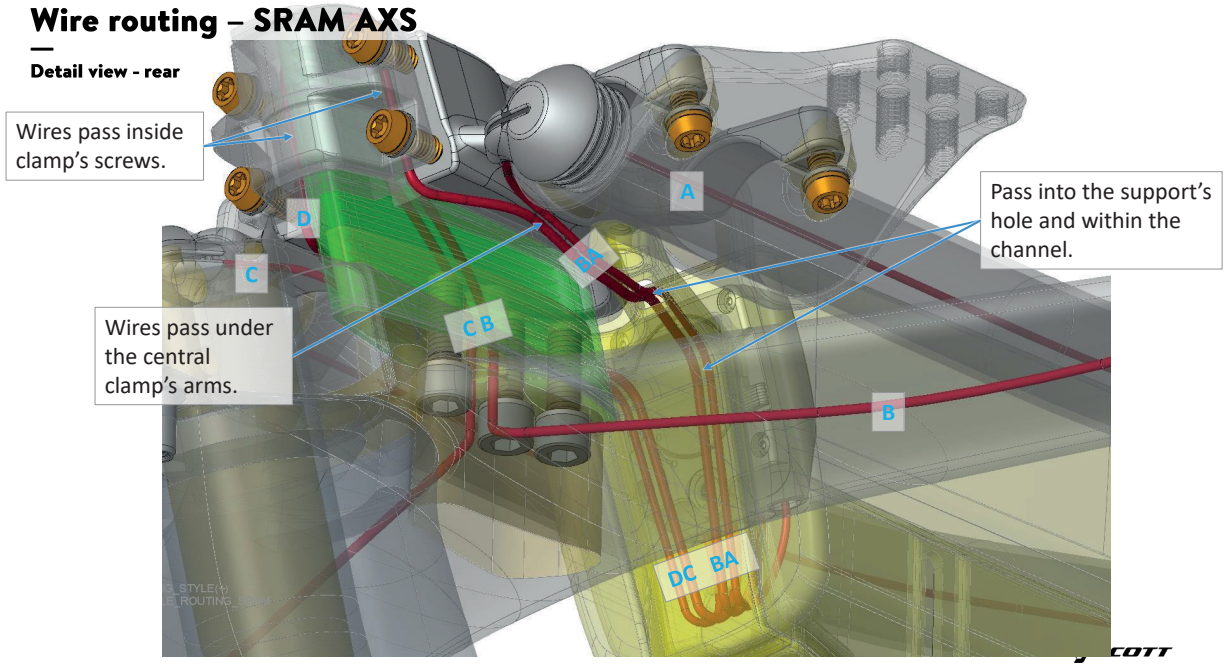

Wire routing – Shimano D12

General view – Shimano parts

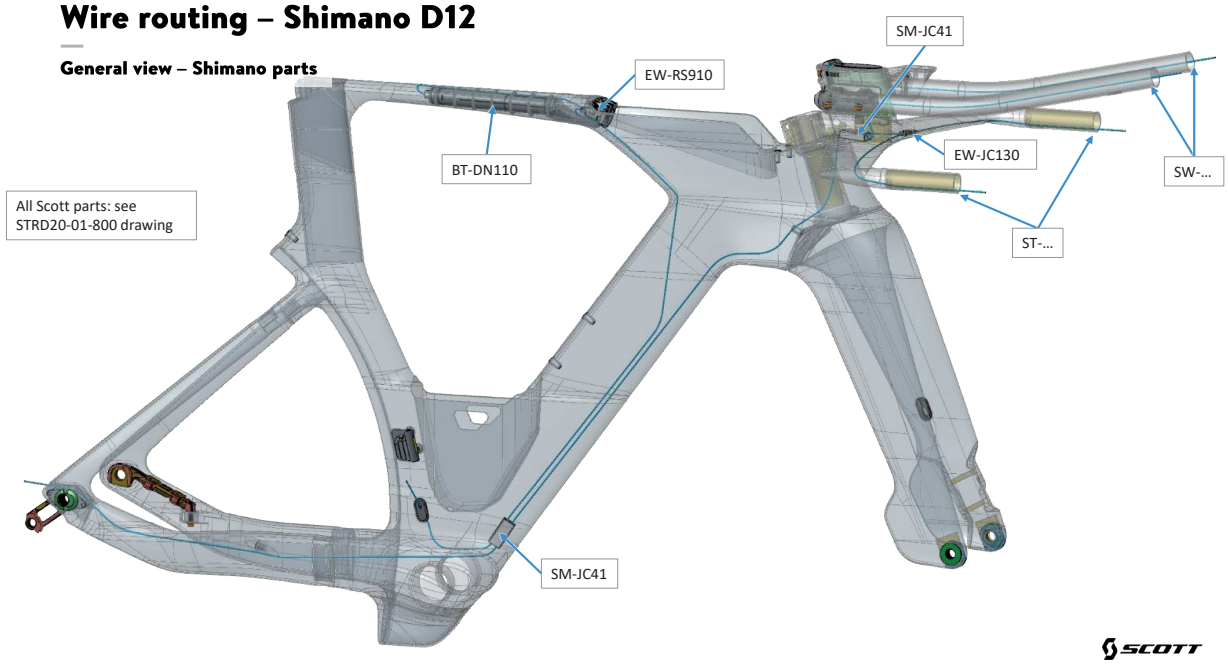

Wire routing – Shimano D12

Basebar wiring – 1

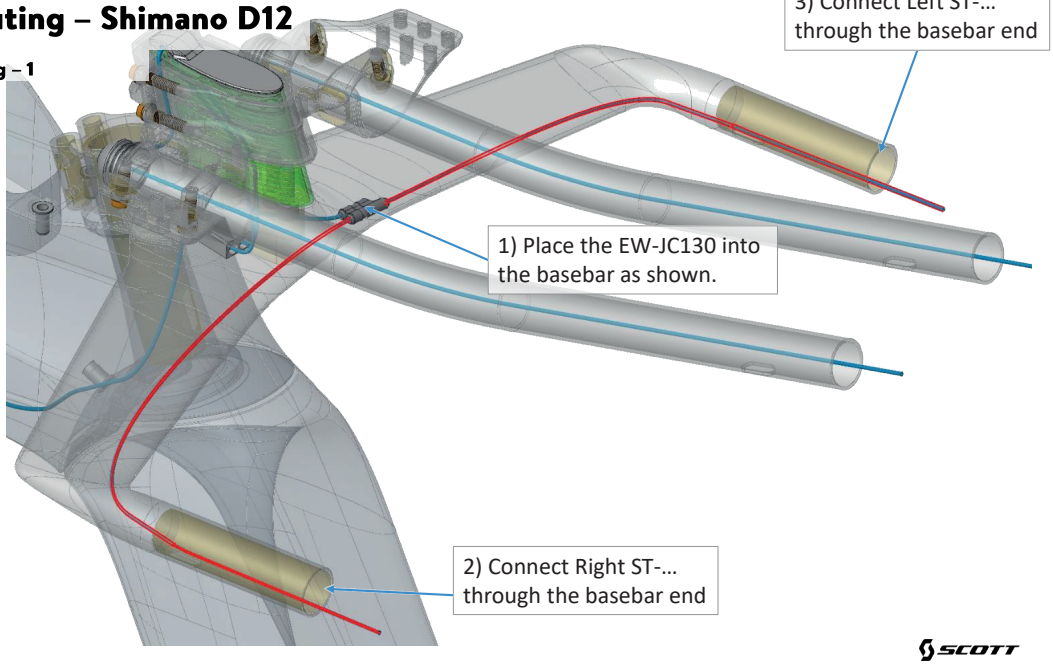

Wire routing – Shimano D12

Basebar wiring – 2

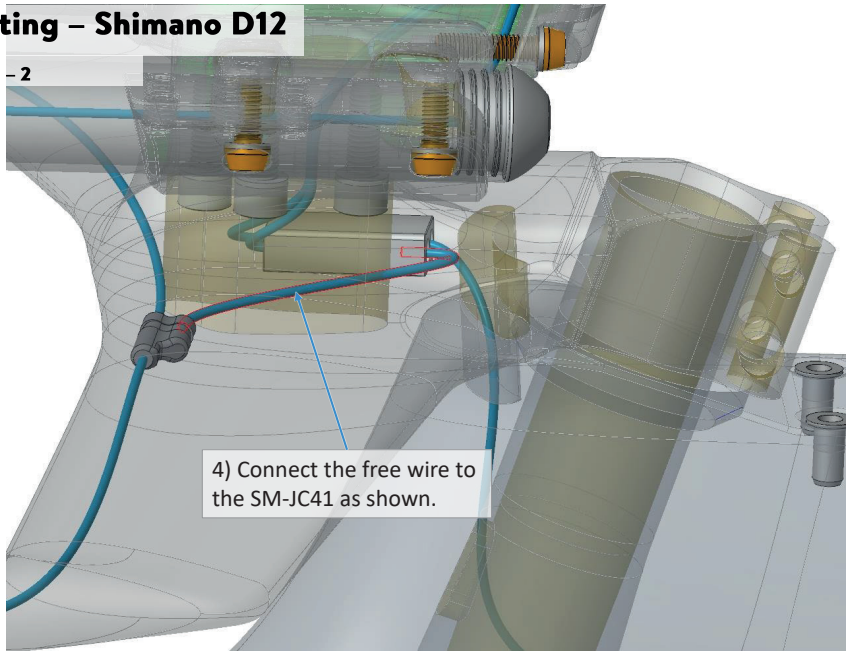

Wire routing – Shimano D12

Extension wiring – Right side

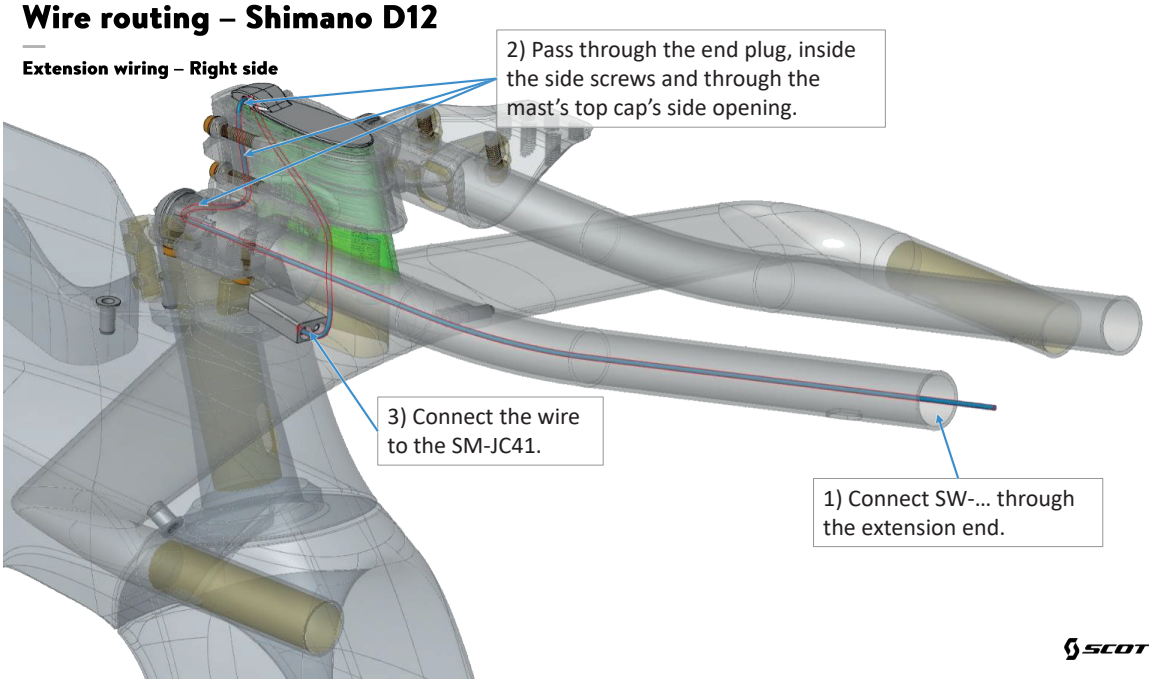

Wire routing – Shimano D12

Extension wiring – Left side

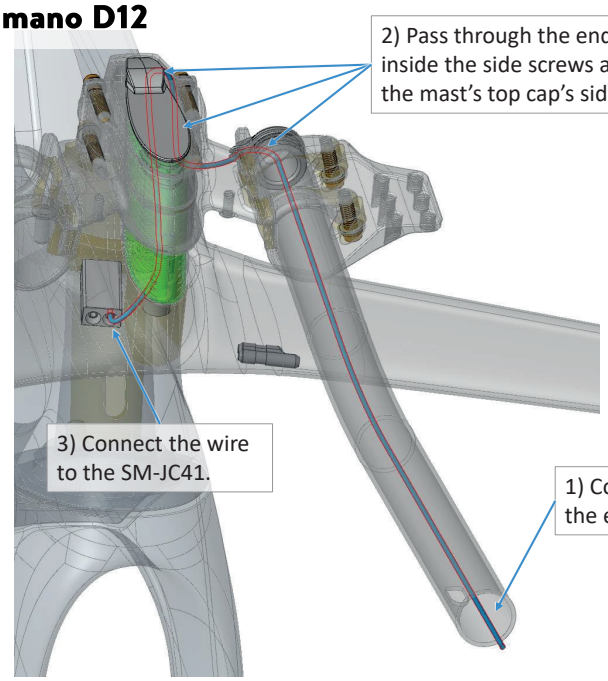

Wire routing – Shimano D12

Extension wiring; Detail view - rear

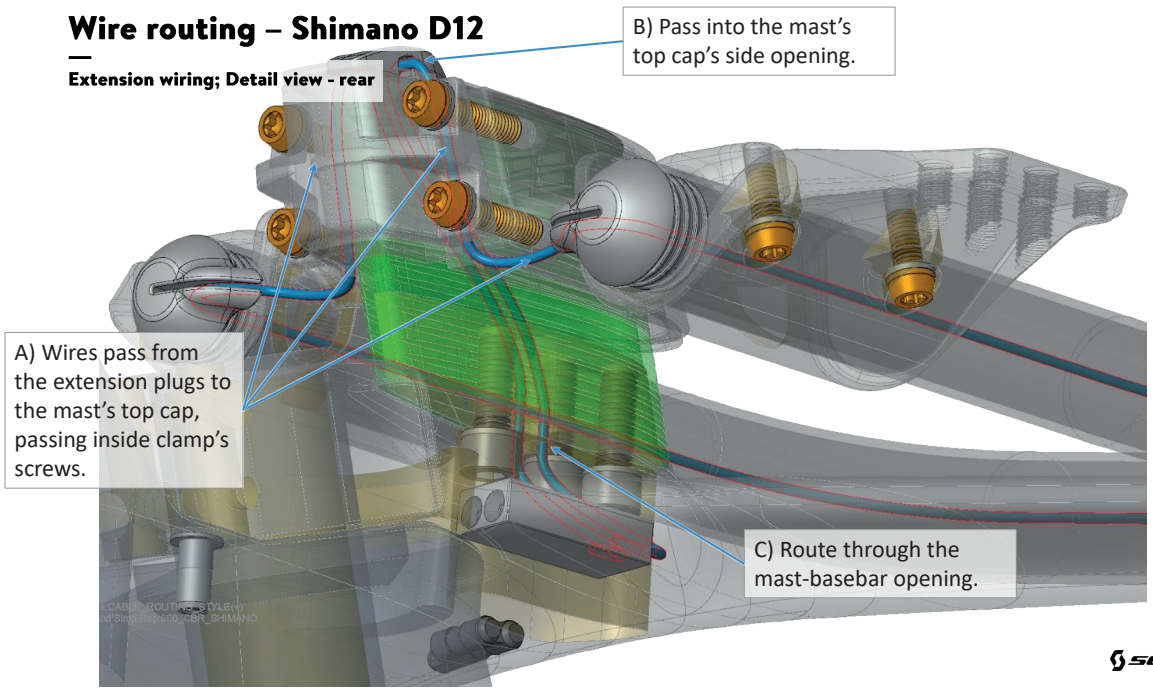

Wire routing – Shimano D12

Cockpit to frame connection

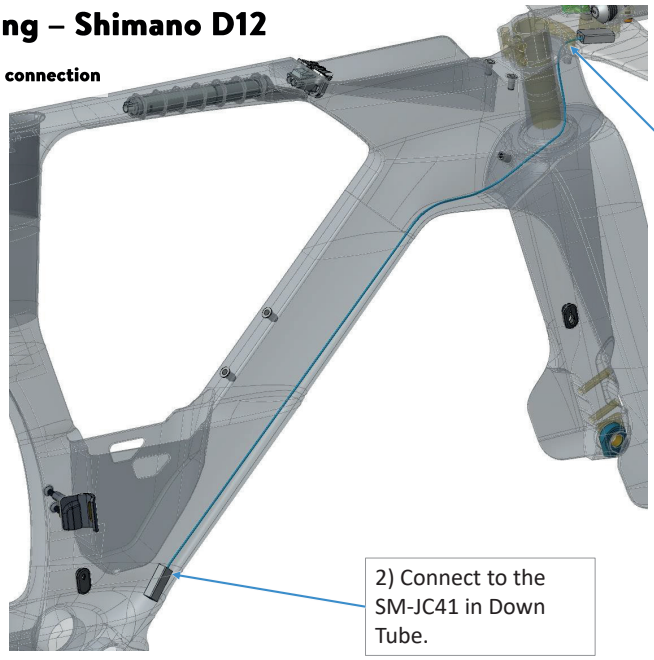

1) Route the wire from the SM-JC41, through trough cockpit's and frame's ports and on steerer's side.

2) Connect to the SM-JC41 in Down Tube.

Wire routing – Shimano D12

EW-RS910 Connector to Down Tube SM-JC41

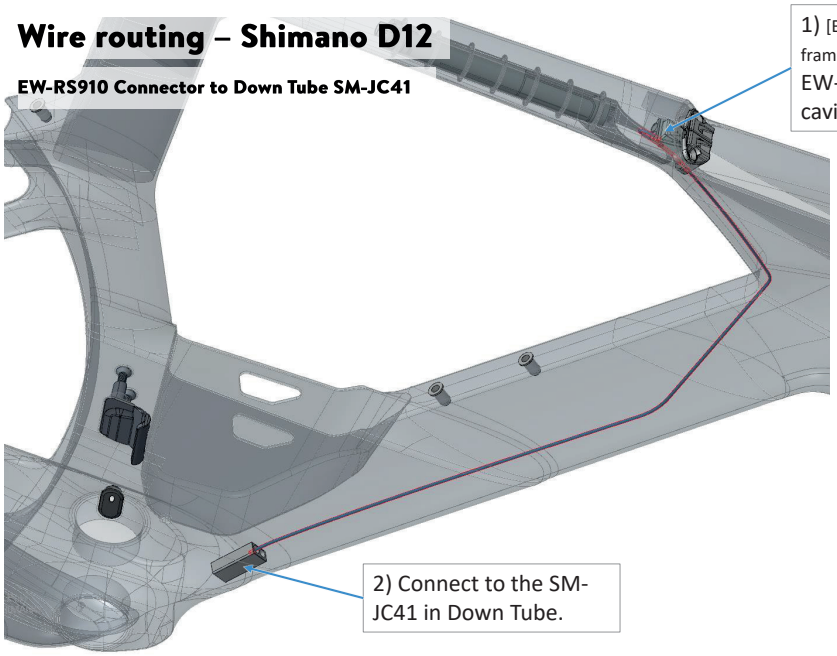

1) [Before fixing the EW-RS910 to the frame] Route the wire from the EW-RS910, on the bottom of cavity and within the Down Tube.

2) Connect to the SM-JC41 in Down Tube.

EW-RS910 - Wiring detail

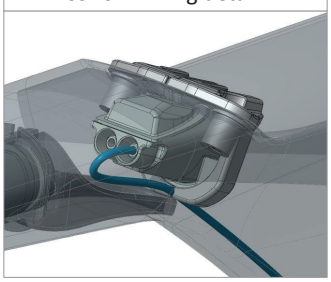

Wire routing – Shimano D12

Battery to EW-RS910 connector

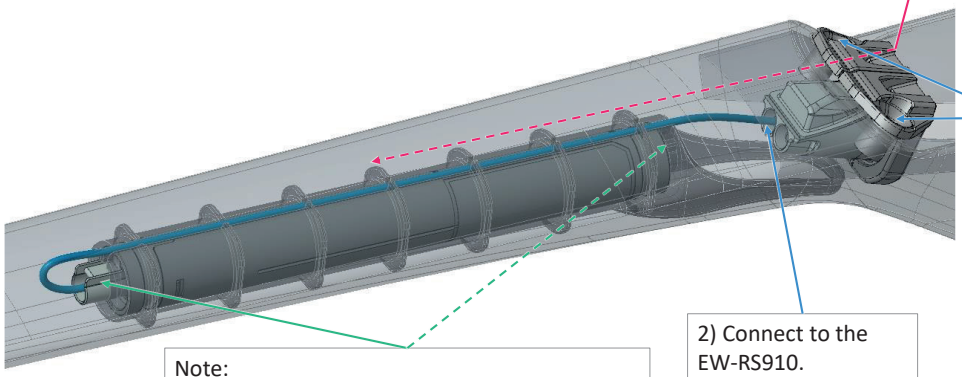

1) A) Fit the battery into the battery mount.
B) Connect the wire to the battery and insert the whole assembly into the Top Tube.

3) Assemble the Rear Hydration Mounts and the connector on the frame.

2) Connect to the EW-RS910.

Note:
Battery can be assembled preferably:
- Frontward for sizes 49-XL, 52-S
- Rearward for sizes 54-M, 56-L, 58-XL

SCOTT

Wire routing – Shimano D12

Down Tube SM-JC41 to derailleurs

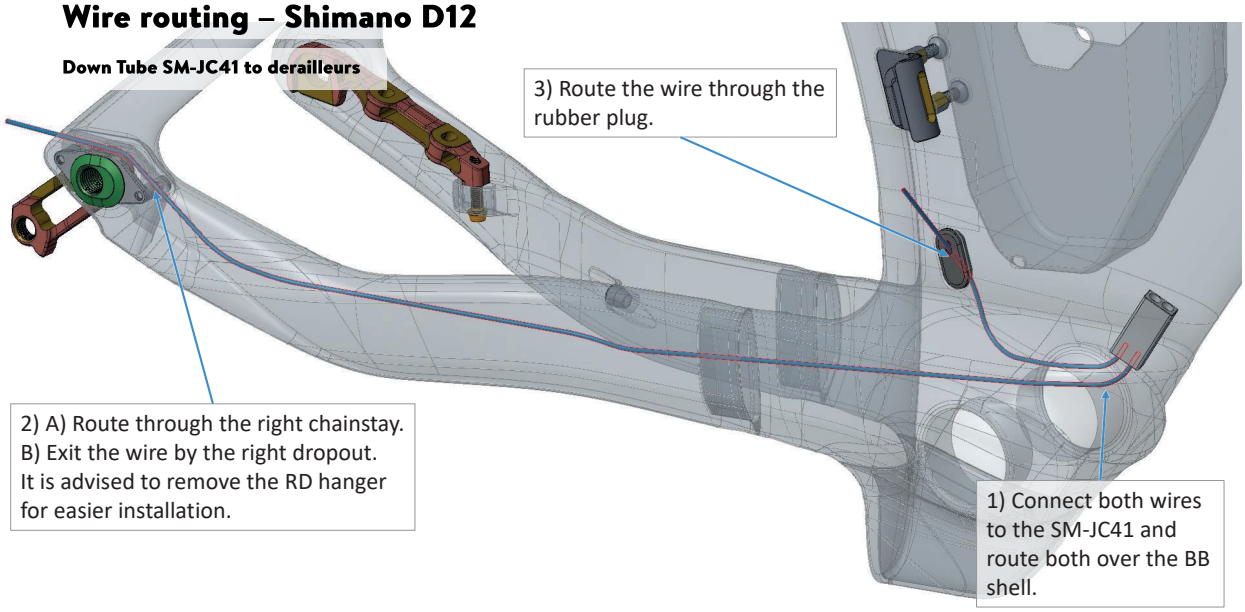

3) Route the wire through the rubber plug.

2) A) Route through the right chainstay.
B) Exit the wire by the right dropout.
It is advised to remove the RD hanger for easier installation.

1) Connect both wires to the SM-JC41 and route both over the BB shell.

SCOTT

PLASMA PREMIUM



ITEM	DESCRIPTION
282611	SCO Fork Plasma Premium 21 Wty
275467	SYN Headset IS52/31.8 - IS46/34
275429	SYN Plasma 6 Top Cap Kit
275496	SYN Plasma 6 Bar/Stem Creston iC TRI low
275414	SYN Plasma 6 Bar/Stem Creston iC TRI hi
275428	SYN Plasma 6 Spacer Angle Adjustment Kit
275417	SYN Plasma 6 Clamp
275418	SYN Plasma 6 Extension E1
275419	SYN Plasma 6 Extension E2
275420	SYN Plasma 6 Arm Pad Brackets
280291	SYN Plasma 6 Storage Box
280292	SYN Plasma 6 Hydration Bottle
280293	SYN Plasma 6 Hydration Bottle Straw Kit
280294	SYN Plasma 6 Gel Bottle
275423	SYN Plasma 6 Seatpost Bottle Mount
275417	SYN Plasma 6 Clamp
275423	SYN Plasma 6 Seatpost Bottle Mount
275422	SYN Plasma 6 Seatpost Duncan 1.0 Tri
275448	SYN Saddle Belcarra V 1.0 TRI, Cut Out
282762	SCO Seatclamp Plasma 6 21
277028	SCO Axle front Addict RC/Plasma 6 TP 20
277029	SCO Axle rear Addict RC/Plasma 6 TP 20
282713	SCO Dropout Plasma 6 21
282717	SCO Brake mount rear Plasma 6 20
282718	SCO FD-mount and blank Plasma 6 21
282715	SCO Brake mount cover front Plasma 6 21
282712	SCO Cableguide kit Plasma 6 21

PLASMA RC



ITEM	DESCRIPTION
282612	SCO Fork Plasma RC 21 Wty
275467	SYN Headset IS52/31.8 - IS46/34
275429	SYN Plasma 6 Top Cap Kit
275496	SYN Plasma 6 Bar/Stem Creston iC TRI low
275414	SYN Plasma 6 Bar/Stem Creston iC TRI hi
275428	SYN Plasma 6 Spacer Angle Adjustment Kit
275417	SYN Plasma 6 Clamp
275418	SYN Plasma 6 Extension E1
275419	SYN Plasma 6 Extension E2
275420	SYN Plasma 6 Arm Pad Brackets
280291	SYN Plasma 6 Storage Box
280292	SYN Plasma 6 Hydration Bottle
280293	SYN Plasma 6 Hydration Bottle Straw Kit
280294	SYN Plasma 6 Gel Bottle
275423	SYN Plasma 6 Seatpost Bottle Mount
275417	SYN Plasma 6 Clamp
275423	SYN Plasma 6 Seatpost Bottle Mount
275422	SYN Plasma 6 Seatpost Duncan 1.0 Tri
282762	SCO Seatclamp Plasma 6 21
277028	SCO Axle front Addict RC/Plasma 6 TP 20
277029	SCO Axle rear Addict RC/Plasma 6 TP 20
272454	SCO Spoke rep kit SY Merr/Cap 1.0 50D
278392	SCO Rim SY Capital 1.0 50D 24H 20
271246	SCO Hub rep kit SY Merr/Cap 1.0D F
271247	SCO Hub rep kit SY Merr/Cap 1.0D R
282714	SCO Dropout Plasma 6 direct mount 21
282717	SCO Brake mount rear Plasma 6 20
282718	SCO FD-mount and blank Plasma 6 21
282715	SCO Brake mount cover front Plasma 6 21

ADDICT RC & CONTESSA ADDICT RC



ADDICT RC ULTIMATE



ITEM	DESCRIPTION
282613	SCO Fork Addict RC Ultimate 21 Wty
275466	SYN Headset IS52/31.8 - IS52/40
277550	SCO Stem steerer cap SY Crest iC
277547	SCO Stem spacer kit SY Crest iC
242489	SCO Headset Compression kit 1 1/4
275409	SYN Bar/Stem Creston iC SL, 380mm
275410	SYN Bar/Stem Creston iC SL, 400mm
275411	SYN Bar/Stem Creston iC SL, 420mm
275412	SYN Bar/Stem Creston iC SL, 440mm
277543	SCO Seatclamp Addict RC 20
275437	SYN Seatpost Duncan Aero SL 0mm Offset
275438	SYN Seatpost Duncan Aero SL 5mm Offset
275439	SYN Seatpost Duncan Aero SL 20mm Offset
275445	SYN Saddle Belcarra R 1.0, Channel
277028	SCO Axle front Addict RC/Plasma 6 TP 20
277029	SCO Axle rear Addict RC/Plasma 6 TP 20
221654	FD-Mount Adapter Plate Foil 2011
277544	SCO Dropout Addict RC 20
277025	SCO Cableguide kit Addict RC D 20
282716	SCO Brake mount cover front Addict RC 21

ADDICT RC PRO



ITEM	DESCRIPTION
282615	SCO Fork Addict RC Pro 21 Wty
275466	SYN Headset IS52/31.8 - IS52/40
277550	SCO Stem steerer cap SY Crest iC
277547	SCO Stem spacer kit SY Crest iC
242489	SCO Headset Compression kit 1 1/4
275409	SYN Bar/Stem Creston iC SL, 380mm
275410	SYN Bar/Stem Creston iC SL, 400mm
275411	SYN Bar/Stem Creston iC SL, 420mm
275412	SYN Bar/Stem Creston iC SL, 440mm
277543	SCO Seatclamp Addict RC 20
275437	SYN Seatpost Duncan Aero SL 0mm Offset
275438	SYN Seatpost Duncan Aero SL 5mm Offset
275438	SYN Seatpost Duncan Aero SL 5mm Offset
275439	SYN Seatpost Duncan Aero SL 20mm Offset
275445	SYN Saddle Belcarra R 1.0, Channel
277028	SCO Axle front Addict RC/Plasma 6 TP 20
277029	SCO Axle rear Addict RC/Plasma 6 TP 20
278391	SCO Rim SY Capital 1.0 35D 24H 20
271246	SCO Hub rep kit SY Merr/Cap 1.0D F
271247	SCO Hub rep kit SY Merr/Cap 1.0D R
272457	SCO Spoke rep kit SY Merr/Cap 1.0 35D
221654	FD-Mount Adapter Plate Foil 2011
277545	SCO Dropout Addict RC direct mount 20
277025	SCO Cableguide kit Addict RC D 20
282716	SCO Brake mount cover front Addict RC 21
235290	DI2 Int.Bat.holder. 31.6 DIS-23 Foil

ADDICT RC 10



ITEM	DESCRIPTION
282621	SCO Fork Addict RC 10 21 Wty
275466	SYN Headset IS52/31.8 - IS52/40
277042	SCO Stem top cover SY RR iC
277549	SCO Stem steerer cap SY RR iC
277548	SCO Stem spacer kit SY RR iC
242489	SCO Headset Compression kit 1 1/4
275431	SYN Stem RR iC, 31,8mm
275413	SYN H.bar Creston iC 1.5 Compact
277543	SCO Seatclamp Addict RC 20
275437	SYN Seatpost Duncan Aero SL 0mm Offset
275438	SYN Seatpost Duncan Aero SL 5mm Offset
275439	SYN Seatpost Duncan Aero SL 20mm Offset
275447	SYN Saddle Belcarra R 2.0, Channel
277031	SCO Axle front Addict RC/Plasma 6 20
277030	SCO Axle rear Addict RC/Plasma 6 20
272457	SCO Spoke rep kit SY Merr/Cap 1.0 35D
278391	SCO Rim SY Capital 1.0 35D 24H 20
271246	SCO Hub rep kit SY Merr/Cap 1.0D F
282722	SCO Hub rep kit SCT-1426 R XDR 21
221654	FD-Mount Adapter Plate Foil 2011
277544	SCO Dropout Addict RC 20
277025	SCO Cableguide kit Addict RC D 20
282716	SCO Brake mount cover front Addict RC 21

ADDICT RC 15



ITEM	DESCRIPTION
282622	SCO Fork Addict RC 15 21 Wty
275466	SYN Headset IS52/31.8 - IS52/40
277042	SCO Stem top cover SY RR iC
277549	SCO Stem steerer cap SY RR iC
277548	SCO Stem spacer kit SY RR iC
242489	SCO Headset Compression kit 1 1/4
275431	SYN Stem RR iC, 31,8mm
275413	SYN H.bar Creston iC 1.5 Compact
277543	SCO Seatclamp Addict RC 20
275437	SYN Seatpost Duncan Aero SL 0mm Offset
275438	SYN Seatpost Duncan Aero SL 5mm Offset
275439	SYN Seatpost Duncan Aero SL 20mm Offset
275447	SYN Saddle Belcarra R 2.0, Channel
277031	SCO Axle front Addict RC/Plasma 6 20
277030	SCO Axle rear Addict RC/Plasma 6 20
272457	SCO Spoke rep kit SY Merr/Cap 1.0 35D
278391	SCO Rim SY Capital 1.0 35D 24H 20
271246	SCO Hub rep kit SY Merr/Cap 1.0D F
271247	SCO Hub rep kit SY Merr/Cap 1.0D R
221654	FD-Mount Adapter Plate Foil 2011
277545	SCO Dropout Addict RC direct mount 20
277025	SCO Cableguide kit Addict RC D 20
282716	SCO Brake mount cover front Addict RC 21
235290	DI2 Int.Bat.holder. 31.6 DIS-23 Foil

ADDICT RC 20



ITEM	DESCRIPTION
282623	SCO Fork Addict RC 20 21 Wty
275466	SYN Headset IS52/31.8 - IS52/40
277042	SCO Stem top cover SY RR iC
277549	SCO Stem steerer cap SY RR iC
277548	SCO Stem spacer kit SY RR iC
242489	SCO Headset Compression kit 1 1/4
275431	SYN Stem RR iC, 31,8mm
277543	SCO Seatclamp Addict RC 20
275437	SYN Seatpost Duncan Aero SL 0mm Offset
275438	SYN Seatpost Duncan Aero SL 5mm Offset
275439	SYN Seatpost Duncan Aero SL 20mm Offset
275447	SYN Saddle Belcarra R 2.0, Channel
277031	SCO Axle front Addict RC/Plasma 6 20
277030	SCO Axle rear Addict RC/Plasma 6 20
266591	SCO Spoke Sy/Form rep kit RP2.0 Disc 18
266617	SCO Rim SY/Form RP2.0 D 28H 18
271260	SCO Hub rep kit Form TXC-712 F 19
282722	SCO Hub rep kit SCT-1426 R XDR 21
221654	FD-Mount Adapter Plate Foil 2011
277544	SCO Dropout Addict RC 20
277025	SCO Cableguide kit Addict RC D 20
282716	SCO Brake mount cover front Addict RC 21

ADDICT RC 30



ITEM	DESCRIPTION
282624	SCO Fork Addict RC 30 21 Wty
275466	SYN Headset IS52/31.8 - IS52/40
277042	SCO Stem top cover SY RR iC
277549	SCO Stem steerer cap SY RR iC
277548	SCO Stem spacer kit SY RR iC
242489	SCO Headset Compression kit 1 1/4
275431	SYN Stem RR iC, 31,8mm
277543	SCO Seatclamp Addict RC 20
275437	SYN Seatpost Duncan Aero SL 0mm Offset
275438	SYN Seatpost Duncan Aero SL 5mm Offset
275439	SYN Seatpost Duncan Aero SL 20mm Offset
275447	SYN Saddle Belcarra R 2.0, Channel
277031	SCO Axle front Addict RC/Plasma 6 20
277030	SCO Axle rear Addict RC/Plasma 6 20
266591	SCO Spoke Sy/Form rep kit RP2.0 Disc 18
266617	SCO Rim SY/Form RP2.0 D 28H 18
271260	SCO Hub rep kit Form TXC-712 F 19
271259	SCO Hub rep kit From TXC-142A R 19
221654	FD-Mount Adapter Plate Foil 2011
277545	SCO Dropout Addict RC direct mount 20
277025	SCO Cableguide kit Addict RC D 20
282716	SCO Brake mount cover front Addict RC 21

ADDICT RC 40



ITEM	DESCRIPTION
285808	SCO Fork Addict RC 40 21 Wty
275466	SYN Headset IS52/31.8 - IS52/40
277042	SCO Stem top cover SY RR iC
277549	SCO Stem steerer cap SY RR iC
277548	SCO Stem spacer kit SY RR iC
242489	SCO Headset Compression kit 1 1/4
275431	SYN Stem RR iC, 31,8mm
277543	SCO Seatclamp Addict RC 20
275437	SYN Seatpost Duncan Aero SL 0mm Offset
275438	SYN Seatpost Duncan Aero SL 5mm Offset
275439	SYN Seatpost Duncan Aero SL 20mm Offset
275447	SYN Saddle Belcarra R 2.0, Channel
277031	SCO Axle front Addict RC/Plasma 6 20
277030	SCO Axle rear Addict RC/Plasma 6 20
266591	SCO Spoke Sy/Form rep kit RP2.0 Disc 18
266617	SCO Rim SY/Form RP2.0 D 28H 18
271260	SCO Hub rep kit Form TXC-712 F 19
271259	SCO Hub rep kit From TXC-142A R 19
221654	FD-Mount Adapter Plate Foil 2011
277545	SCO Dropout Addict RC direct mount 20
277025	SCO Cableguide kit Addict RC D 20
282716	SCO Brake mount cover front Addict RC 21

CONT. ADDICT RC 15



ITEM	DESCRIPTION
282646	SCO Fork Cont Addict RC 15 21 Wty
275466	SYN Headset IS52/31.8 - IS52/40
277042	SCO Stem top cover SY RR iC
277549	SCO Stem steerer cap SY RR iC
277548	SCO Stem spacer kit SY RR iC
242489	SCO Headset Compression kit 1 1/4
275431	SYN Stem RR iC, 31,8mm
275413	SYN H.bar Creston iC 1.5 Compact
277543	SCO Seatclamp Addict RC 20
275437	SYN Seatpost Duncan Aero SL 0mm Offset
275438	SYN Seatpost Duncan Aero SL 5mm Offset
275439	SYN Seatpost Duncan Aero SL 20mm Offset
275453	SYN Saddle Celista V 1.5, Cut Out
277031	SCO Axle front Addict RC/Plasma 6 20
277030	SCO Axle rear Addict RC/Plasma 6 20
272457	SCO Spoke rep kit SY Merr/Cap 1.0 35D
278391	SCO Rim SY Capital 1.0 35D 24H 20
271246	SCO Hub rep kit SY Merr/Cap 1.0D F
271247	SCO Hub rep kit SY Merr/Cap 1.0D R
221654	FD-Mount Adapter Plate Foil 2011
277545	SCO Dropout Addict RC direct mount 20
277025	SCO Cableguide kit Addict RC D 20
282716	SCO Brake mount cover front Addict RC 21
235290	DI2 Int.Bat.holder. 31.6 DIS-23 Foil

ADDICT ENDURANCE & CONTESSA ADDICT



ADDICT SE



ITEM	DESCRIPTION
282625	SCO Fork Addict SE D 21 Wty
234811	SYN Headset IS41/28.6 - IS46/34
264026	SCO Stem spacer kit/topcap Sync RR1.5/2.
242488	SCO Headset Compression kit 1 1/8
250568	SYN Stem RR2.0 31.8mm
235429	Seatclamp 30.2mm bolt Addict MY14
275440	SYN Seatpost Duncan SL 10mm Offset
275441	SYN Seatpost Duncan SL 25mm Offset
270211	SYN Saddle Tofino R 2.0, Channel
283341	SCO Axle Foil/Addict/Speedster D F 21
283340	SCO Axle Foil/Addict/Speedster D R 21
266591	SCO Spoke Sy/Form rep kit RP2.0 Disc 18
266617	SCO Rim SY/Form RP2.0 D 28H 18
271260	SCO Hub rep kit Form TXC-712 F 19
282722	SCO Hub rep kit SCT-1426 R XDR 21
239530	Dropout hanger Solace Disc '15<
268626	SCO Cableguide set Addict/Metrix10MF18

ADDICT 10



ITEM	DESCRIPTION
282626	SCO Fork Addict 10 D 21 Wty
234811	SYN Headset IS41/28.6 - IS46/34
264026	SCO Stem spacer kit/topcap Sync RR1.5/2.
242488	SCO Headset Compression kit 1 1/8
250568	SYN Stem RR2.0 31.8mm
235429	Seatclamp 30.2mm bolt Addict MY14
275440	SYN Seatpost Duncan SL 10mm Offset
275441	SYN Seatpost Duncan SL 25mm Offset
270211	SYN Saddle Tofino R 2.0, Channel
283341	SCO Axle Foil/Addict/Speedster D F 21
283340	SCO Axle Foil/Addict/Speedster D R 21
266591	SCO Spoke Sy/Form rep kit RP2.0 Disc 18
266617	SCO Rim SY/Form RP2.0 D 28H 18
271260	SCO Hub rep kit Form TXC-712 F 19
271259	SCO Hub rep kit From TXC-142A R 19
239530	Dropout hanger Solace Disc '15<
268626	SCO Cableguide set Addict/Metrix10MF18

ADDICT 20



ITEM	DESCRIPTION
282627	SCO Fork Addict 20 D 21 Wty
234811	SYN Headset IS41/28.6 - IS46/34
264026	SCO Stem spacer kit/topcap Sync RR1.5/2.
242488	SCO Headset Compression kit 1 1/8
250568	SYN Stem RR2.0 31.8mm
235429	Seatclamp 30.2mm bolt Addict MY14
270211	SYN Saddle Tofino R 2.0, Channel
283341	SCO Axle Foil/Addict/Speedster D F 21
283340	SCO Axle Foil/Addict/Speedster D R 21
266591	SCO Spoke Sy/Form rep kit RP2.0 Disc 18
266617	SCO Rim SY/Form RP2.0 D 28H 18
271260	SCO Hub rep kit Form TXC-712 F 19
271259	SCO Hub rep kit From TXC-142A R 19
239530	Dropout hanger Solace Disc '15<
268626	SCO Cableguide set Addict/Metrix10MF18

ADDICT 30



ITEM	DESCRIPTION
282628	SCO Fork Addict 30 D 21 Wty
234811	SYN Headset IS41/28.6 - IS46/34
264026	SCO Stem spacer kit/topcap Sync RR1.5/2.
242488	SCO Headset Compression kit 1 1/8
250568	SYN Stem RR2.0 31.8mm
235429	Seatclamp 30.2mm bolt Addict MY14
283341	SCO Axle Foil/Addict/Speedster D F 21
283340	SCO Axle Foil/Addict/Speedster D R 21
266813	SCO Rim SY/Alex Race 24 D (28H) 18
272194	BGM Hub Axlekit front Formula CL-712
277383	BGM Hub Repkit Rear Formula RXC-400 20
239530	Dropout hanger Solace Disc '15<
268626	SCO Cableguide set Addict/Metrix10MF18

282629	SCO Fork Addict 30 21 Wty
234811	SYN Headset IS41/28.6 - IS46/34
264026	SCO Stem spacer kit/topcap Sync RR1.5/2.
242488	SCO Headset Compression kit 1 1/8
250568	SYN Stem RR2.0 31.8mm
235429	Seatclamp 30.2mm bolt Addict MY14
282758	SCO Rim SY/Alex Race 24 V 24H 21
282759	SCO Rim SY/Alex Race 24 V 28H 21
249110	BGM Hub Axle Kit Front Formula RB25
249100	BGM Hub Axle Kit RB2611 Road 11sp
235286	Dropout hanger Addict Solace 2014 PACK-2
268626	SCO Cableguide set Addict/Metrix10MF18

CONT. ADDICT 15



ITEM	DESCRIPTION
282647	SCO Fork Cont Addict 15 D 21 Wty
234811	SYN Headset IS41/28.6 - IS46/34
264026	SCO Stem spacer kit/topcap Sync RR1.5/2.
242488	SCO Headset Compression kit 1 1/8
250568	SYN Stem RR2.0 31.8mm
235429	Seatclamp 30.2mm bolt Addict MY14
275455	SYN Saddle Celista V 2.0, Cut Out
283341	SCO Axle Foil/Addict/Speedster D F 21
283340	SCO Axle Foil/Addict/Speedster D R 21
266591	SCO Spoke Sy/Form rep kit RP2.0 Disc 18
266617	SCO Rim SY/Form RP2.0 D 28H 18
271260	SCO Hub rep kit Form TXC-712 F 19
271259	SCO Hub rep kit From TXC-142A R 19
239530	Dropout hanger Solace Disc '15<
268626	SCO Cableguide set Addict/Metrix10MF18

CONT. ADDICT 25



ITEM	DESCRIPTION
282648	SCO Fork Cont Addict 25 D 21 Wty
283340	SCO Axle Foil/Addict/Speedster D R 21
234811	SYN Headset IS41/28.6 - IS46/34
266591	SCO Spoke Sy/Form rep kit RP2.0 Disc 18
264026	SCO Stem spacer kit/topcap Sync RR1.5/2.
266617	SCO Rim SY/Form RP2.0 D 28H 18
242488	SCO Headset Compression kit 1 1/8
271260	SCO Hub rep kit Form TXC-712 F 19
250568	SYN Stem RR2.0 31.8mm
271259	SCO Hub rep kit From TXC-142A R 19
235429	Seatclamp 30.2mm bolt Addict MY14
239530	Dropout hanger Solace Disc '15<
275455	SYN Saddle Celista V 2.0, Cut Out
268626	SCO Cableguide set Addict/Metrix10MF18
283341	SCO Axle Foil/Addict/Speedster D F 21

CONT.ADDICT 35



ITEM	DESCRIPTION
282649	SCO Fork Cont Addict 35 D 21 Wty
283341	SCO Axle Foil/Addict/Speedster D F 21
234811	SYN Headset IS41/28.6 - IS46/34
283340	SCO Axle Foil/Addict/Speedster D R 21
264026	SCO Stem spacer kit/topcap Sync RR1.5/2.
266813	SCO Rim SY/Alex Race 24 D (28H) 18
242488	SCO Headset Compression kit 1 1/8
272194	BGM Hub Axlekit front Formula CL-712
250568	SYN Stem RR2.0 31.8mm
277383	BGM Hub Repkit Rear Formula RXC-400 20
235429	Seatclamp 30.2mm bolt Addict MY14
239530	Dropout hanger Solace Disc '15<
275455	SYN Saddle Celista V 2.0, Cut Out
268626	SCO Cableguide set Addict/Metrix10MF18

ADDICT GRAVEL/CX & CONTESSA ADDICT GRAVEL



ADDICT GRAVEL 10



ITEM	DESCRIPTION
282644	SCO Fork Addict Gravel 10 21 Wty
241901	SYN Headset IS42/28.6 - IS52/40
264026	SCO Stem spacer kit/topcap Sync RR1.5/2.
242488	SCO Headset Compression kit 1 1/8
250567	SYN Stem RR1.5 31.8mm
265562	SYN H.bar Creston 1.0 Flare
235429	Seatclamp 30.2mm bolt Addict MY14
270205	SYN Saddle Tofino R 1.0, Cut Out
283341	SCO Axle Foil/Addict/Speedster D F 21
283340	SCO Axle Foil/Addict/Speedster D R 21
266591	SCO Spoke Sy/Form rep kit RP2.0 Disc 18
272457	SCO Spoke rep kit SY Merr/Cap 1.0 35D
278390	SCO Rim SY Capital 1.0 X40D 24H 20
271246	SCO Hub rep kit SY Merr/Cap 1.0D F
282722	SCO Hub rep kit SCT-1426 R XDR 21
239530	Dropout hanger Solace Disc '15<
268626	SCO Cableguide set Addict/Metrix10MF18
242435	SCO Chainguide set Addict CX 16

ADDICT GRAVEL 20



ITEM	DESCRIPTION
282645	SCO Fork Addict Gravel 20 21 Wty
283340	SCO Axle Foil/Addict/Speedster D R 21
241901	SYN Headset IS42/28.6 - IS52/40
266591	SCO Spoke Sy/Form rep kit RP2.0 Disc 18
264026	SCO Stem spacer kit/topcap Sync RR1.5/2.
266617	SCO Rim SY/Form RP2.0 D 28H 18
242488	SCO Headset Compression kit 1 1/8
271260	SCO Hub rep kit Form TXC-712 F 19
250568	SYN Stem RR2.0 31.8mm
271259	SCO Hub rep kit From TXC-142A R 19
235429	Seatclamp 30.2mm bolt Addict MY14
264483	SCO Dropout hanger 142x12 DM Addict D 17
270213	SYN Saddle Tofino R 2.0, Cut Out
268626	SCO Cableguide set Addict/Metrix10MF18
283341	SCO Axle Foil/Addict/Speedster D F 21
242435	SCO Chainguide set Addict CX 16

ADDICT CX RC



ITEM	DESCRIPTION
276449	SCO Fork Addict CX RC 20 Wty
266591	SCO Spoke Sy/Form rep kit RP2.0 Disc 18
241901	SYN Headset IS42/28.6 - IS52/40
266617	SCO Rim SY/Form RP2.0 D 28H 18
264026	SCO Stem spacer kit/topcap Sync RR1.5/2.
271260	SCO Hub rep kit Form TXC-712 F 19
242488	SCO Headset Compression kit 1 1/8
271259	SCO Hub rep kit From TXC-142A R 19
250567	SYN Stem RR1.5 31.8mm
271259	SCO Hub rep kit From TXC-142A R 19
235429	Seatclamp 30.2mm bolt Addict MY14
264483	SCO Dropout hanger 142x12 DM Addict D 17
270213	SYN Saddle Tofino R 2.0, Cut Out
268626	SCO Cableguide set Addict/Metrix10MF18
283341	SCO Axle Foil/Addict/Speedster D F 21
242435	SCO Chainguide set Addict CX 16
283340	SCO Axle Foil/Addict/Speedster D R 21

CONT. AD GRAVEL 15



ITEM	DESCRIPTION
282653	SCO Fork Cont Addict Gravel 15 21 Wty
283340	SCO Axle Foil/Addict/Speedster D R 21
234811	SYN Headset IS41/28.6 - IS46/34
266591	SCO Spoke Sy/Form rep kit RP2.0 Disc 18
264026	SCO Stem spacer kit/topcap Sync RR1.5/2.
266617	SCO Rim SY/Form RP2.0 D 28H 18
242488	SCO Headset Compression kit 1 1/8
271260	SCO Hub rep kit Form TXC-712 F 19
250568	SYN Stem RR2.0 31.8mm
271259	SCO Hub rep kit From TXC-142A R 19
235429	Seatclamp 30.2mm bolt Addict MY14
264483	SCO Dropout hanger 142x12 DM Addict D 17
275455	SYN Saddle Celista V 2.0, Cut Out
268626	SCO Cableguide set Addict/Metrix10MF18
283341	SCO Axle Foil/Addict/Speedster D F 21
242435	SCO Chainguide set Addict CX 16

METRIX



METRIX 10



ITEM	DESCRIPTION
282630	SCO Fork Metrix 10 21 Wty
283341	SCO Axle Foil/Addict/Speedster D F 21
234811	SYN Headset IS41/28.6 - IS46/34
283340	SCO Axle Foil/Addict/Speedster D R 21
264026	SCO Stem spacer kit/topcap Sync RR1.5/2.
266813	SCO Rim SY/Alex Race 24 D (28H) 18
242488	SCO Headset Compression kit 1 1/8
272194	BGM Hub Axlekit front Formula CL-712
250568	SYN Stem RR2.0 31.8mm
277383	BGM Hub Repkit Rear Formula RXC-400 20
270227	SYN Grips Comfort Ergo, Lock On
239530	Dropout hanger Solace Disc '15<
235429	Seatclamp 30.2mm bolt Addict MY14
268626	SCO Cableguide set Addict/Metrix10MF18
270212	SYN Saddle Tofino V 2.0, Channel

METRIX 20



ITEM	DESCRIPTION
282631	SCO Fork Metrix 20 21 Wty
242488	SCO Headset Compression kit 1 1/8
228949	Seatclamp 31.8mm bolt Kalloy SC202
270227	SYN Grips Comfort Ergo, Lock On
283341	SCO Axle Foil/Addict/Speedster D F 21
283340	SCO Axle Foil/Addict/Speedster D R 21
266813	SCO Rim SY/Alex Race 24 D (28H) 18
239530	Dropout hanger Solace Disc '15<
272194	BGM Hub Axlekit front Formula CL-712
277383	BGM Hub Repkit Rear Formula RXC-400 20
208362	Antichainsuck Clamp 34.9

METRIX 30



ITEM	DESCRIPTION
282632	SCO Fork Metrix 30 21 Wty
200718	Headset Ritchey sem.int.11/8
228949	Seatclamp 31.8mm bolt Kalloy SC202
270227	SYN Grips Comfort Ergo, Lock On
266813	SCO Rim SY/Alex Race 24 D (28H) 18
282721	SCO Hub rep kit SCT-2103 F 21
282719	SCO Hub rep kit SCT-2106 Shim R 21
266778	SCO Dropout Hanger Speedster 18
208362	Antichainsuck Clamp 34.9
270244	SYN Road endurance fender set

SPEEDSTER & CONTESSA SPEEDSTER



SPEEDSTER 10 DISC



ITEM	DESCRIPTION
282633	SCO Fork Speedster 10 D 21 Wty
242488	SCO Headset Compression kit 1 1/8
250568	SYN Stem RR2.0 31.8mm
228949	Seatclamp 31.8mm bolt Kalloy SC202
283341	SCO Axle Foil/Addict/Speedster D F 21
283340	SCO Axle Foil/Addict/Speedster D R 21
266813	SCO Rim SY/Alex Race 24 D (28H) 18
272194	BGM Hub Axlekit front Formula CL-712
277383	BGM Hub Repkit Rear Formula RXC-400 20
264483	SCO Dropout hanger 142x12 DM Addict D 17
208362	Antichainsuck Clamp 34.9

SPEEDSTER 10



ITEM	DESCRIPTION
282635	SCO Fork Speedster 10 21 Wty
242488	SCO Headset Compression kit 1 1/8
250568	SYN Stem RR2.0 31.8mm
228949	Seatclamp 31.8mm bolt Kalloy SC202
282758	SCO Rim SY/Alex Race 24 V 24H 21
282759	SCO Rim SY/Alex Race 24 V 28H 21
249110	BGM Hub Axle Kit Front Formula RB25
249100	BGM Hub Axle Kit RB2611 Road 11sp
266778	SCO Dropout Hanger Speedster 18
208362	Antichainsuck Clamp 34.9

SPEEDSTER 20 DISC



ITEM	DESCRIPTION
282634	SCO Fork Speedster 20 D 21 Wty
242488	SCO Headset Compression kit 1 1/8
228949	Seatclamp 31.8mm bolt Kalloy SC202
283341	SCO Axle Foil/Addict/Speedster D F 21
283340	SCO Axle Foil/Addict/Speedster D R 21
266813	SCO Rim SY/Alex Race 24 D (28H) 18
272194	BGM Hub Axlekit front Formula CL-712
277383	BGM Hub Repkit Rear Formula RXC-400 20
264483	SCO Dropout hanger 142x12 DM Addict D 17
208362	Antichainsuck Clamp 34.9

SPEEDSTER 20



ITEM	DESCRIPTION
282636	SCO Fork Speedster 20 21 Wty
242488	SCO Headset Compression kit 1 1/8
228949	Seatclamp 31.8mm bolt Kalloy SC202
282758	SCO Rim SY/Alex Race 24 V 24H 21
282759	SCO Rim SY/Alex Race 24 V 28H 21
249110	BGM Hub Axle Kit Front Formula RB25
249100	BGM Hub Axle Kit RB2611 Road 11sp
266778	SCO Dropout Hanger Speedster 18
208362	Antichainsuck Clamp 34.9

SPEEDSTER 30



ITEM	DESCRIPTION
282637	SCO Fork Speedster 30 21 Wty
242488	SCO Headset Compression kit 1 1/8
228949	Seatclamp 31.8mm bolt Kalloy SC202
282758	SCO Rim SY/Alex Race 24 V 24H 21
282759	SCO Rim SY/Alex Race 24 V 28H 21
282720	SCO Hub rep kit SCT-2105 F 21
282724	SCO Hub rep kit SCT-2108 R Shim 21
266778	SCO Dropout Hanger Speedster 18
208362	Antichainsuck Clamp 34.9

SPEEDSTER 40



ITEM	DESCRIPTION
282638	SCO Fork Speedster 40 21 Wty
200718	Headset Ritchey sem.int.11/8
228949	Seatclamp 31.8mm bolt Kalloy SC202
282758	SCO Rim SY/Alex Race 24 V 24H 21
282759	SCO Rim SY/Alex Race 24 V 28H 21
282720	SCO Hub rep kit SCT-2105 F 21
282724	SCO Hub rep kit SCT-2108 R Shim 21
266778	SCO Dropout Hanger Speedster 18
208362	Antichainsuck Clamp 34.9

SPEEDSTER 50



ITEM	DESCRIPTION
282639	SCO Fork Speedster 50 21 Wty
200718	Headset Ritchey sem.int.11/8
228949	Seatclamp 31.8mm bolt Kalloy SC202
282758	SCO Rim SY/Alex Race 24 V 24H 21
282759	SCO Rim SY/Alex Race 24 V 28H 21
282720	SCO Hub rep kit SCT-2105 F 21
282724	SCO Hub rep kit SCT-2108 R Shim 21
266778	SCO Dropout Hanger Speedster 18
208362	Antichainsuck Clamp 34.9

CONT.SPEEDSTER 15 D



ITEM	DESCRIPTION
282650	SCO Fork Cont Speedster 15 D 21 Wty
242488	SCO Headset Compression kit 1 1/8
250568	SYN Stem RR2.0 31.8mm
228949	Seatclamp 31.8mm bolt Kalloy SC202
283341	SCO Axle Foil/Addict/Speedster D F 21
283340	SCO Axle Foil/Addict/Speedster D R 21
266813	SCO Rim SY/Alex Race 24 D (28H) 18
272194	BGM Hub Axlekit front Formula CL-712
277383	BGM Hub Repkit Rear Formula RXC-400 20
264483	SCO Dropout hanger 142x12 DM Addict D 17
208362	Antichainsuck Clamp 34.9

CONT.SPEEDSTER 15



ITEM	DESCRIPTION
282651	SCO Fork Cont Speedster 15 21 Wty
242488	SCO Headset Compression kit 1 1/8
250568	SYN Stem RR2.0 31.8mm
228949	Seatclamp 31.8mm bolt Kalloy SC202
282758	SCO Rim SY/Alex Race 24 V 24H 21
282759	SCO Rim SY/Alex Race 24 V 28H 21
249110	BGM Hub Axle Kit Front Formula RB25
249100	BGM Hub Axle Kit RB2611 Road 11sp
266778	SCO Dropout Hanger Speedster 18
208362	Antichainsuck Clamp 34.9

CONT.SPEEDSTER 25



ITEM	DESCRIPTION
282652	SCO Fork Cont Speedster 25 21 Wty
200718	Headset Ritchey sem.int.11/8
228949	Seatclamp 31.8mm bolt Kalloy SC202
282758	SCO Rim SY/Alex Race 24 V 24H 21
282759	SCO Rim SY/Alex Race 24 V 28H 21
282720	SCO Hub rep kit SCT-2105 F 21
282724	SCO Hub rep kit SCT-2108 R Shim 21
266778	SCO Dropout Hanger Speedster 18
208362	Antichainsuck Clamp 34.9

SPEEDSTER & CONTESSA SPEEDSTER GRAVEL



SPEEDSTER GRAVEL 10



ITEM	DESCRIPTION
282640	SCO Fork Speedster Gravel 10 21 Wty
242488	SCO Headset Compression kit 1 1/8
250568	SYN Stem RR2.0 31.8mm
228949	Seatclamp 31.8mm bolt Kalloy SC202
283341	SCO Axle Foil/Addict/Speedster D F 21
283340	SCO Axle Foil/Addict/Speedster D R 21
266813	SCO Rim SY/Alex Race 24 D (28H) 18
272194	BGM Hub Axlekit front Formula CL-712
277383	BGM Hub Repkit Rear Formula RXC-400 20
239530	Dropout hanger Solace Disc '15<
208362	Antichainsuck Clamp 34.9

SPEEDSTER GRAVEL 20



ITEM	DESCRIPTION
282641	SCO Fork Speedster Gravel 20 21 Wty
242488	SCO Headset Compression kit 1 1/8
228949	Seatclamp 31.8mm bolt Kalloy SC202
283341	SCO Axle Foil/Addict/Speedster D F 21
283340	SCO Axle Foil/Addict/Speedster D R 21
266813	SCO Rim SY/Alex Race 24 D (28H) 18
272194	BGM Hub Axlekit front Formula CL-712
277383	BGM Hub Repkit Rear Formula RXC-400 20
239530	Dropout hanger Solace Disc '15<
208362	Antichainsuck Clamp 34.9

SPEEDSTER GRAVEL 30



ITEM	DESCRIPTION
282642	SCO Fork Speedster Gravel 30 21 Wty
242488	SCO Headset Compression kit 1 1/8
228949	Seatclamp 31.8mm bolt Kalloy SC202
283341	SCO Axle Foil/Addict/Speedster D F 21
283340	SCO Axle Foil/Addict/Speedster D R 21
266813	SCO Rim SY/Alex Race 24 D (28H) 18
272194	BGM Hub Axlekit front Formula CL-712
277383	BGM Hub Repkit Rear Formula RXC-400 20
239530	Dropout hanger Solace Disc '15<
208362	Antichainsuck Clamp 34.9

SPEEDSTER GRAVEL 40



ITEM	DESCRIPTION
282643	SCO Fork Speedster Gravel 40 21 Wty
242488	SCO Headset Compression kit 1 1/8
228949	Seatclamp 31.8mm bolt Kalloy SC202
283341	SCO Axle Foil/Addict/Speedster D F 21
283340	SCO Axle Foil/Addict/Speedster D R 21
266813	SCO Rim SY/Alex Race 24 D (28H) 18
272194	BGM Hub Axlekit front Formula CL-712
277383	BGM Hub Repkit Rear Formula RXC-400 20
239530	Dropout hanger Solace Disc '15<
208362	Antichainsuck Clamp 34.9

CONT.SPEED.GRAVEL 15



ITEM	DESCRIPTION
282654	SCO Fork Cont Speedster Gravel 15 21 Wty
242488	SCO Headset Compression kit 1 1/8
228949	Seatclamp 31.8mm bolt Kalloy SC202
283341	SCO Axle Foil/Addict/Speedster D F 21
283340	SCO Axle Foil/Addict/Speedster D R 21
266813	SCO Rim SY/Alex Race 24 D (28H) 18
272194	BGM Hub Axlekit front Formula CL-712
277383	BGM Hub Repkit Rear Formula RXC-400 20
239530	Dropout hanger Solace Disc '15<
208362	Antichainsuck Clamp 34.9

CONT.SPEED.GRAVEL 25



ITEM	DESCRIPTION
282655	SCO Fork Cont Speedster Gravel 25 21 Wty
242488	SCO Headset Compression kit 1 1/8
228949	Seatclamp 31.8mm bolt Kalloy SC202
283341	SCO Axle Foil/Addict/Speedster D F 21
283340	SCO Axle Foil/Addict/Speedster D R 21
266813	SCO Rim SY/Alex Race 24 D (28H) 18
272194	BGM Hub Axlekit front Formula CL-712
277383	BGM Hub Repkit Rear Formula RXC-400 20
239530	Dropout hanger Solace Disc '15<
208362	Antichainsuck Clamp 34.9

ROAD WARRANTY FRAMES & TECHNICAL DATA

ITEM	FRAMESET ADDICT & CONT. ADDICT
282510	SCO Frameset Addict RC Ultimate D 21 Wty
282511	SCO Frameset Addict RC Pro D 21 Wty
285794	SCO Frameset Addict RC 10D 21 Wty
282512	SCO Frameset Addict SE D 21 Wty
282513	SCO Frameset Addict 30 21 Wty
282518	SCO Frameset Cont Addict RC 15 21 Wty
282519	SCO Frameset Cont Addict 15 D 21 Wty
282517	SCO Frameset Addict Gravel 10 21 Wty
282520	SCO Frameset Cont Addict Gra 15 21 Wty
ITEM	FRAMESET SPEEDSTER & CONT. SPEED.
282522	SCO Frameset Speedster 10 D 21 Wty
282523	SCO Frameset Speedster 10 21 Wty
285795	SCO Frameset Cont Speedster 15 D 21 Wty
282524	SCO Frameset Speedster Gravel 10 21 Wty
283336	SCO Frameset Cont Speed Gra 15 21 Wty
ITEM	FRAMESET METRIX
282514	SCO Frameset Metrix 10 21 Wty
282515	SCO Frameset Metrix 20 21 Wty
282516	SCO Frameset Metrix 30 21 Wty
ITEM	FRAMESET FOIL
282508	SCO Frameset Foil Pro 21 Wty
282509	SCO Frameset Foil 10 21 Wty
ITEM	FRAMESET PLASMA
282506	SCO Frameset Plasma PR 21 Wty
282507	SCO Frameset Plasma RC 21 Wty

	Max Rotor Size	BB-spec	F.Derailleur spec	Crankarm	Headset	Stem Length	Bar Width	Seatpost	Seatpost Clamp
SCO Bike Plasma Premium	160MM	DUB PRESS-FIT ROAD86.5	RED ETAP AXS BRAZE-ON WIRELESS 2X12S	165(49/52) ; 170(54/56) 172.5(58)	PLASMA 6 COMPRESSURE RING 1-1/4'', 46-51.9	85MM	400MM	85MM	400MM
SCO Bike Plasma RC	160MM	SM-BB71-41B	FD-R8050-F 11S FOR DOUBLE Di2	165(49/52) ; 170(54/56) 172.5(58)	PLASMA 6 COMPRESSURE RING 1-1/4'', 46-51.9	85MM	400MM	PLASMA RC STP05C1-2	W/ SPOST
SCO Bike Foil Pro	160MM	SM-BB92-41B FOR ROAD	FD-R9150-F 11S FOR DOUBLE	170(47/49/52) ; 172.5(54/56) 175(58/61"	FOIL 2 HEADSET OE SET 26.7 50 WITH TOP COVER	90(47/49) ; 100(52) 110(54/56) ; 120(58/61)	380(47) ; 400(49) 420(52/54/56/58)440(61)	350X5:47/49/52/54 400X2056/58/61	W/ SPOST
SCO Bike Foil 10	160MM	DUB PRESS-FIT ROAD86.5	FORCE ETAP AXS BRAZE 2X12 GLOSS	170(47/49/52) ; 172.5(54/56) 175(58/61)	FOIL 2 HEADSET OE SET 26.7 50 WITH TOP COVER	90(47/49) ; 100(52) 110(54/56) ; 120(58/61)	380(47) ; 400(49) 420(52/54/56/58)440(61)	350X5:47/49/52/54 400X2056/58/61	W/ SPOST
SCO Bike Foil 20	160MM	SM-BB71-41B FOR ROAD	FD-R8050-F 11S FOR DOUBLE Di2	170(47/49/52) ; 172.5(54/56) 175(58/61)	FOIL 2 HEADSET OE SET 26.7 50 WITH TOP COVER	90(47/49) ; 100(52) 110(54/56) ; 120(58/61)	380(47) ; 400(49) 420(52/54/56/58)440(61)	350X5:47/49/52/54 400X2056/58/61	W/ SPOST
SCO Bike Foil 30	160MM	SM-BB71-41B FOR ROAD	FD-R8000-F 11S BRAZE-ON FOR DOUBLE	170(47/49/52) ; 172.5(54/56) 175(58/61)	FOIL 2 HEADSET OE SET 26.7 50 WITH TOP COVER	90(47/49) ; 100(52) 110(54/56) ; 120(58/61)	380(47) ; 400(49) 420(52/54/56/58)440(61)	350X5:47/49/52/54 400X2056/58/61	W/ SPOST
SCO Bike Addict RC Ultimate	160MM	DUB PRESS-FIT ROAD86.5	RED ETAP AXS BRAZE-ON WIRELESS 2X12S	170(47/49/52) ; 172.5(54/56) 175(58/61)	IS52/31.8 - IS52/40 SYN-CROS ADDICT RC	90(47/49) ; 100(52) 110(54/56) ; 120(58/61)	380(47) ; 400(49) 420(52/54/56/58)440(61)	350X5:47/49/52/54 400X2056/58/61	W/ SPOST
SCO Bike Addict RC Pro	160MM	SM-BB92-41B	FD-R9150-F 11S FOR DOUBLE	170(47/49/52) ; 172.5(54/56) 175(58/61)	IS52/31.8 - IS52/40 SYN-CROS ADDICT RC	90(47/49) ; 100(52) 110(54/56) ; 120(58/61)	380(47) ; 400(49) 420(52/54/56/58)440(61)	350X5:47/49/52/54 400X2056/58/61	W/ SPOST
SCO Bike Addict RC 10 pr.grey green	160MM	DUB PRESS-FIT ROAD86.5	FORCE ETAP AXS BRAZE ON 2X12 GLOSS	170(47/49/52) ; 172.5(54/56) 175(58/61)	IS52/31.8 - IS52/40 SYN-CROS ADDICT RC	90(47/49) ; 100(52) 110(54/56) ; 120(58/61)	380(47) ; 400(49) 420(52/54/56/58)440(61)	350X5:47/49/52/54 400X2056/58/61	W/ SPOST
SCO Bike Addict RC 10 pearl white	160MM	DUB PRESS-FIT ROAD86.5	FORCE ETAP AXS BRAZE 2X12 GLOSS	170(47/49/52) ; 172.5(54/56) 175(58/61)	IS52/31.8 - IS52/40 SYN-CROS ADDICT RC	90(47/49) ; 100(52) 110(54/56) ; 120(58/61)	380(47) ; 400(49) 420(52/54/56/58)440(61)	350X5:47/49/52/54 400X2056/58/61	W/ SPOST
SCO Bike Addict RC 15 carb.onyx blk	160MM	SM-BB71-41B FOR ROAD	FD-R8050-F 11S FOR DOUBLE Di2	170(47/49/52) ; 172.5(54/56) 175(58/61)	IS52/31.8 - IS52/40 SYN-CROS ADDICT RC	90(47/49) ; 100(52) 110(54/56) ; 120(58/61)	380(47) ; 400(49) 420(52/54/56/58)440(61)	350X5:47/49/52/54 400X2056/58/61	W/ SPOST
SCO Bike Addict RC 15 pr.kom. green	160MM	SM-BB71-41B FOR ROAD	FD-R8050-F 11S FOR DOUBLE Di2	"170(47/49/52) ; 172.5(54/56) 175(58/61)	IS52/31.8 - IS52/40 SYN-CROS ADDICT RC	90(47/49) ; 100(52) 110(54/56) ; 120(58/61)	380(47) ; 400(49) 420(52/54/56/58)440(61)	350X5:47/49/52/54 400X2056/58/61	W/ SPOST

	Max Rotor Size	BB-spec	F.Derailleur spec	Crankarm	Headset	Stem Length	Bar Width	Seatpost	Seatpost Clamp
SCO Bike Addict RC 20	160MM	DUB PRESSFIT 86.5	FORCE ETAP AXS BRAZE ON 61-66	170(47/49/52) ; 172.5(54/56) 175(58/61)	IS52/31.8 - IS52/40 SYN-CROS ADDICT RC 51.9, 41,51.9, 41,	90(47/49) ; 100(52) 110(54/56) ; 120(58/61)	380(47) ; 400(49) 420(52/54/56/58) 440(61)	350X5:47/49/52/54 400X20:56/58/61	W/SPOST
SCO Bike Addict RC 30 pr.green purple	160MM	BB71-41B FOR ROAD	FD-R8000-F 11S BRAZE-ON	170(47/49/52) ; 172.5(54/56) 175(58/61)	IS52/31.8 - IS52/40 SYN-CROS ADDICT RC 51.9, 41,51.9, 41,	90(47/49) ; 100(52) 110(54/56) ; 120(58/61)	380(47) ; 400(49) 420(52/54/56/58) 440(61)	350X5:47/49/52/54 400X20:56/58/61	W/SPOST
SCO Bike Addict RC 30 yellow	160MM	BB71-41B FOR ROAD	FD-R8000-F 11S BRAZE-ON	170(47/49/52) ; 172.5(54/56) 175(58/61)	IS52/31.8 - IS52/40 SYN-CROS ADDICT RC 51.9, 41,51.9, 41,	90(47/49) ; 100(52) 110(54/56) ; 120(58/61)	380(47) ; 400(49) 420(52/54/56/58) 440(61)	350X5:47/49/52/54 400X20:56/58/61	W/SPOST
SCO Bike Addict RC 40	160MM	BB-RS500-PB	FD-R7000-F 11S BLK BRAZE-ON DSWING/61-66 53 TP GEAR	170(47/49/52) ; 172.5(54/56) 175(58/61)	IS52/31.8 - IS52/40 SYN-CROS ADDICT RC 51.9, 41,51.9, 41,	90(47/49) ; 100(52) 110(54/56) ; 120(58/61)	380(47) ; 400(49) 420(52/54/56/58) 440(61)	350X5:47/49/52/54 400X20:56/58/61	W/SPOST
SCO Bike Addict SE disc	160MM	DUB PRESSFIT 86.5	FORCE ETAP AXS BRAZE ON 61-66	170(47/49/52) ; 172.5(54/56) 175(58/61)	SYNCROS 1-1/8"- 1-1/4", 45 /45 ° SEAL CAR-TRIDGE	80(47) ; 90(49) ; 100(52) ; 110(54/56) 120(58/61)	380(47) ; 400(49) 420(52/54/56/58) 440(61)	350X5:47/49/52/54 400X20:56/58/61	31.2MM
SCO Bike Addict 10 disc carb.oyx. blk	160MM	BB71-41B FOR ROAD	FD-R8000-F 11S BRAZE-ON	170(47/49/52) ; 172.5(54/56) 175(58/61)	SYNCROS 1-1/8"- 1-1/4", 45 /45 ° SEAL CAR-TRIDGE	80(47) ; 90(49) ; 100(52) ; 110(54/56) 120(58/61)	380(47) ; 400(49) 420(52/54/56/58) 440(61)	350X5:47/49/52/54 400X20:56/58/61	31.2MM
SCO Bike Addict 10 disc marine blue	160MM	BB71-41B FOR ROAD COVER	FD-R8000-F 11S BRAZE-ON	170(47/49/52) ; 172.5(54/56) 175(58/61)	SYNCROS 1-1/8"- 1-1/4", 45 /45 ° SEAL CAR-TRIDGE	80(47) ; 90(49) ; 100(52) ; 110(54/56) 120(58/61)	380(47) ; 400(49) 420(52/54/56/58) 440(61)	350X5:47/49/52/54 400X20:56/58/61	31.2MM
SCO Bike Addict 20 disc stellar blue	160MM	BB-RS500-PB	FD-R7000-F 11S BLK BRAZE-ON DSWING/61-66 53 TP GEAR	170(47/49/52) ; 172.5(54/56) 175(58/61)	SYNCROS 1-1/8"- 1-1/4", 45 /45 ° SEAL CAR-TRIDGE	80(47) ; 90(49) ; 100(52) ; 110(54/56) 120(58/61)	380(47) ; 400(49) 420(52/54/56/58) 440(61)	350X5:47/49/52/54 400X20:56/58/61	31.2MM
SCO Bike Addict 20 disc pearl white	160MM	BB-RS500-PB	FD-R7000-F 11S BLK BRAZE-ON DSWING/61-66 53 TP GEAR	170(47/49/52) ; 172.5(54/56) 175(58/61)	SYNCROS 1-1/8"- 1-1/4", 45 /45 ° SEAL CAR-TRIDGE	80(47) ; 90(49) ; 100(52) ; 110(54/56) 120(58/61)	380(47) ; 400(49) 420(52/54/56/58) 440(61)	350X5:47/49/52/54 400X20:56/58/61	31.2MM
SCO Bike Addict 30 disc	160MM	BB-RS500-PB	FD4700 DB 10S BRAZED	170(47/49/52) ; 172.5(54/56) 175(58/61)	SYNCROS 1-1/8"- 1-1/4", 45 /45 ° SEAL CAR-TRIDGE	80(47) ; 90(49) ; 100(52) ; 110(54/56) 120(58/61)	380(47) ; 400(49) 420(52/54/56/58) 440(61)	350X5:47/49/52/54 400X20:56/58/61	31.2MM
SCO Bike Addict 30	160MM	BB-RS500-PB	FD4700 DB 10S BRAZED	170(47/49/52) ; 172.5(54/56) 175(58/61)	SYNCROS 1-1/8"- 1-1/4", 45 /45 ° SEAL CAR-TRIDGE	80(47) ; 90(49) ; 100(52) ; 110(54/56) 120(58/61)	380(47) ; 400(49) 420(52/54/56/58) 440(61)	350X5:47/49/52/54 400X20:56/58/61	31.2MM
SCO Bike Addict Gravel 10	160MM	DUB PRESSFIT 86.5	ETAP AXS BRAZE ON 61-66	170(49/52) ; 172.5(54/56) 175(58)	SYNCROS 1/8" - 1.5" TAPERED, DROP-IN SEALED CARTRIDGE	90(49) ; 100(52) 110(54/56) ; 120(58)	400(49) 420(52/54) 440(56/58)	"350X10:49/52/54 350X25:56/58"	30.2MM

	Max Rotor Size	BB-spec	F.Derailleur spec	Crankarm	Headset	Stem Length	Bar Width	Seatpost	Seatpost Clamp
SCO Bike Addict Gravel 20	160MM	BB-RS500-PB FOR ROAD	FD-RX810 11S D-SWING DOWN-PULL BRAZED 50T CL:46MM	"170MM(49/52) ; 172.5MM(54/56) 175MM(58)"	DROP IN FL 2.0, ACB BEARING/1-1/8"- 1.5"/42-52MM,	"90(49) ; 100(52) 110(54/56) ; 120(58)"	"400(49) 420(52/54) 440(56/58)"	"350X5:49/52/54 350X18:56/58"	30.2MM
SCO Bike Addict CX RC	160MM	BB72-41B FOR ROAD	NONE	"170(49/52) ; 172.5(54/56) 175(58)"	FL 2.0, ACB BEARING/1-1/8"- 1.5"/42-52MM,	"90(49) ; 100(52) 110(54/56) ; 120(58)"	"400(49) 420(52/54) 440(56/58)"	"350X10:49/52/54 350X25:56/58"	30.2MM
SCO Bike Speedster 10 disc	160MM	"BB-RS500-PB ABBRS500PB"	"Shimano FD-R7000-L KFDR7000FL"	170(XXS/XS/S) / 172.5(M/L) / 175(XL/XXL)	1-1/8"x1-1/4"x44x50	80(XXS), 90(XS-G28:G33), 100(S), 110(M/L), 120(XL/XXL)	380(XXS) / 400(XS) / 420(S/M/L/XL) / 440(XXL)	27.2x350	31.8mm
SCO Bike Speedster 10	NONE	BB-RS500-PB	"Shimano FD-R7000-L KFDR7000FL"	170(XXS/XS/S) / 172.5(M/L) / 175(XL/XXL)	1-1/8"x1-1/4"x44x50	80(XXS), 90(XS-G28:G33), 100(S), 110(M/L), 120(XL/XXL)	380(XXS) / 400(XS) / 420(S/M/L/XL) / 440(XXL)	27.2x350	31.8mm
SCO Bike Speedster 20 disc	160MM	ABBRS500PB	FD-4700 KFD4700F"	170(XXS/XS/S) / 172.5(M/L) / 175(XL/XXL)	1-1/8"x1-1/4"x44x50	80(XXS), 90(XS-G28:G33), 100(S), 110(M/L), 120(XL/XXL)	380(XXS) / 400(XS) / 420(S/M/L/XL) / 440(XXL)	27.2x350	31.8mm
SCO Bike Speedster 20	N/A	BB-RS500-PB	FD-4700 KFD4700F"	170(XXS/XS/S) / 172.5(M/L) / 175(XL/XXL)	1-1/8"x1-1/4"x44x50	80(XXS), 90(XS-G28:G33), 100(S), 110(M/L), 120(XL/XXL)	380(XXS) / 400(XS) / 420(S/M/L/XL) / 440(XXL)	27.2x350	31.8mm
SCO Bike Speedster 30	N/A	ABBRS500PB	FD-R3000 AFDR3000BM"	170(XXS/XS/S) / 172.5(M/L) / 175(XL/XXL)	1-1/8"x44x30	80(XXS), 90(XS-G28:G33), 100(S), 110(M/L), 120(XL/XXL)	380(XXS) / 400(XS) / 420(S/M/L/XL) / 440(XXL)	27.2x350	31.8mm
SCO Bike Speedster 40	N/A	AB-BUN300B10B/ BSA68mm"	FD-R2000 AFDR2000BM"	170(XXS/XS/S) / 172.5(M/L) / 175(XL/XXL)	1-1/8"x44x30	80(XXS), 90(XS-G28:G33), 100(S), 110(M/L), 120(XL/XXL)	380(XXS) / 400(XS) / 420(S/M/L/XL) / 440(XXL)	27.2x350	31.8mm
SCO Bike Speedster 50	N/A	AB-BUN300B10B/ BSA68mm"	FD-A070-A AFDA070AM"	170(XXS/XS/S) / 172.5(M/L) / 175(XL/XXL)	1-1/8"x44x30	80(XXS), 90(XS-G28:G33), 100(S), 110(M/L), 120(XL/XXL)	380(XXS) / 400(XS) / 420(S/M/L/XL) / 440(XXL)	27.2x350	31.8mm
SCO Bike Speedster Gravel 10	160MM	"BB-RS500-PB SM-BB71-41B"	FD-RX810 KFDRX810F"	170(XXS/XS/S) / 172.5(M/L) / 175(XL/XXL)	1-1/8" - 1-1/4" / 50-44	80(XXS), 90(XS-G28:G33), 100(S), 110(M/L), 120(XL/XXL)	380(XXS) / 400(XS) / 420(S/M/L/XL) / 440(XXL)	27.2x350	31.8mm
SCO Bike Speedster Gravel 20	160MM	"BB-RS500-PB SM-BB71-41B"	FD-RX810 KFDRX810F"	170(XXS/XS/S) / 172.5(M/L) / 175(XL/XXL)	1-1/8" - 1-1/4" / 50-44	80(XXS), 90(XS-G28:G33), 100(S), 110(M/L), 120(XL/XXL)	380(XXS) / 400(XS) / 420(S/M/L/XL) / 440(XXL)	27.2x350	31.8mm
SCO Bike Speedster Gravel 30	160MM	"BB-RS500-PB SM-BB71-41B"	FD-RX400 KFDRX400F"	170(XXS/XS/S) / 172.5(M/L) / 175(XL/XXL)	1-1/8" - 1-1/4" / 50-44	80(XXS), 90(XS-G28:G33), 100(S), 110(M/L), 120(XL/XXL)	380(XXS) / 400(XS) / 420(S/M/L/XL) / 440(XXL)	27.2x350	31.8mm

	Max Rotor Size	BB-spec	F.Derailleur spec	Crankarm	Headset	Stem Length	Bar Width	Seatpost	Seatpost Clamp
SCO Bike Speedster Gravel 40	160MM	"BB-RS500-PB SM-BB71-41B"	FD-4700 KFD4700F"	170(XXS/XS/S) / 172.5(M/L) / 175(XL/XXL)	1-1/8" - 1-1/4" / 50-44	80(XXS), 90(XS-G28:G33), 100(S), 110(M/L), 120(XL/XXL)	380(XXS) / 400(XS) / 420(S/M/L/XL) / 440(XXL)	27.2x350	31.8mm
SCO Bike Metrix 10	160MM	"BB-RS500-PB SM-BB71-41B"	FD-R7000-L KFDR7000FL"	170(XXS/XS/S) / 172.5(M/L) / 175(XL/XXL)	1-1/8"X1-1/4"X41X46	80(XXS), 90(XS-G28:G33), 100(S), 110(M/L), 120(XL/XXL)	580mm	27.2x350	31.2mm
SCO Bike Metrix 20	160MM	"BB-RS500-PB SM-BB71-41B"	FD-4700 KFD4700F"	170(XXS/XS/S) / 172.5(M/L) / 175(XL/XXL)	1-1/8"x1-1/4"x44x50	80(XXS), 90(XS-G28:G33), 100(S), 110(M/L), 120(XL/XXL)	580mm	27.2x350	31.8mm
SCO Bike Metrix 30 EQ	160MM	"BBUN26 /110mm/ BSA 86mm"	FD-R2000 AFDR2000BM"	170(XXS/XS/S) / 172.5(M/L) / 175(XL/XXL)	1-1/8"x44x30	80(XXS), 90(XS-G28:G33), 100(S), 110(M/L), 120(XL/XXL)	580mm	27.2x350	31.8mm
SCO Bike Contessa Addict RC 15	160MM	SM-BB71-41B FOR ROAD	FD-R8050-F 11S FOR DB Di2	"165(47/49) ; 170(52/54) 172.5(56)"	IS52/31.8 - IS52/40 51.9, 41,51.9, 41,	"90(47/49/52) ; 100(54/56)"	"380(47/49/52) ; 400(54/56)0"	"350X5:47/49/52/54 400X20:56"	W/ SPOST
SCO Bike Contessa Addict 15 disc	160MM	SM-BB71-41B KSMBB7141B"	FD-R8000-F KFDR8000F"	"165(47/49) ; 170(52/54) 172.5(56)"	1-1/8"X1-1/4"X41X46mm	80(XXS/XS), 90(S), 100(M), 110(L),	380mm(XXS/XS/S:) / 400mm(M/L)	27.2mmx350mm	31.2mm
SCO Bike Contessa Addict 25 disc	160MM	Press Fit BB-RS500-PB ABBRS500PB"	FD-R7000-F KFDR7000FL"	"165(47/49) ; 170(52/54) 172.5(56)"	1-1/8"X1-1/4"X41X46mm	80(XXS/XS), 90(S), 100(M), 110(L),	380mm(XXS/XS/S:) / 400mm(M/L)	27.2mmx350mm	31.2mm
SCO Bike Contessa Addict 35 disc	160MM	Press Fit BB-RS500-PB ABBRS500PB"	FD-4700-F KFD4700F"	"165(47/49) ; 170(52/54) 172.5(56)"	1-1/8"X1-1/4"X41X46mm	80(XXS/XS), 90(S), 100(M), 110(L),	380mm(XXS/XS/S:) / 400mm(M/L)	27.2mmx350mm	31.8mm
SCO Bike Contessa Addict Gravel 15	160MM	BB-RS500-PB FOR ROAD	FD-RX810 11S SWING DOW-PULL BRAZ-50T CL:46MM	"170(49/52) ; 172.5(54/56)"	FL 2.0, ACB BEAR-ING/1-1/8"- 1.5"/42-52MM	80(XXS/XS), 90(S), 100(M), 110(L),	"400MM(49/52) 420MM(54/56)"	"350X5:49/52/54 350X18:56"	30.2MM
SCO Bike Contessa Speedster 15 disc	160MM	P Fit BBRS500-PB ABBRS500PB"	FD-R7000-L KFDR7000FL"	165(XXS/XS) / 170(S/M) / 172.5(L)	1-1/8"x1-1/4"x44x50mm	80(XXS/XS), 90(S), 100(M), 110(L),	"380mm (XXS/XS/S)/ 400mm (M/L)"	27.2mmx350mm	31.8mm
SCO Bike Contessa Speedster 15	NONE	Press Fit BB-RS500-PB ABBRS500PB"	FD-R7000-L KFDR7000FL"	165(XXS/XS) / 170(S/M) / 172.5(L)	1-1/8"x1-1/4"x44x50mm	80(XXS/XS), 90(S), 100(M), 110(L),	"380mm (XXS/XS/S)/ 400mm (M/L)"	27.2mmx350mm	31.8mm
SCO Bike Contessa Speedster 25	NONE	BSA68mm"	FD-R2000 AFDR2000BM"	165(XXS/XS) / 170(S/M) / 172.5(L)	1-1/8"x1-1/4"x44x50mm	80(XXS/XS), 90(S), 100(M), 110(L),	"380mm (XXS/XS/S)/ 400mm (M/L)"	27.2mmx350mm	31.8mm
SCO Bike Contessa Speedster Gravel 15	160MM	Press Fit BB-RS500-PB ABBRS500PB"	FD-RX810 KFDRX810F"	165(XXS/XS) / 170(S/M) / 172.5(L)	1-1/8"x1-1/4"x44x50mm	80(XXS/XS), 90(S), 100(M), 110(L),	"380mm (XXS/XS/S)/ 400mm (M/L)"	27.2mmx350mm	31.8mm
SCO Bike Contessa Speedster Gravel 25	160MM	Press Fit BB-RS500-PB ABBRS500PB"	FD-4700 KFD4700F"	165(XXS/XS) / 170(S/M) / 172.5(L)	1-1/8"x1-1/4"x44x50mm	80(XXS/XS), 90(S), 100(M), 110(L),	"380mm (XXS/XS/S)/ 400mm (M/L)"	27.2mmx350mm	31.8mm

ADDICT eRIDE



The all new Addict eRIDE will be explained in full with the a video supplied separately.

Main Points of Reference

But the following steps regarding the removal of the Demo Mode prier to the sale of the bike must be undertaken.

The safe removal of the rear wheel must be explained to the customer, so not to damage the system
connection with the rear motor when changing the tyre or after a puncture.

The safe removal of the battery for transport (explained along side the rear wheel removal process).

Warranty Procedure for Mahle Parts.

Range Booster.

Removing the Demo Mode

You can find the ebikemotion® APP in the Apple Store or on iTUNES. If you are using an Android smartphone, you can install the ebikemotion® APP through the Google Play Store. App Icon will be White not Blue in your App Store. **You will have to create a Username & Password.**
Mahle Dealer Manuals available online for download at https://www.ebikemotion.com/web/download-center/

The Addict eRIDE arrives at the store in a special mode called DEMO MODE, this configuration limits its speed to a maximum of 50km. Before the end user can cycle on the eBike, the store will have to change this configuration by changing its mode to ACTIVE MODE. To change the MODE the store has to connect the eBike to the Dealer APP by Bluetooth®, a short diagnosis is made before the activation. Once activated the eBike is considered as sold.

As mentioned before, the ebikemotion® guarantee is considered to take effect from the moment the bike is activated.

Remember that if the eBike is not activated the light on the iWoc will be GREEN. Once the eBike has travelled more than 50 km the level of assistance will automatically change to NEUTRAL.

Addict eRIDE should go through the following
steps when in the store:

1- Make sure the battery is charged, otherwise charge the eBike to prevent it from turning off during an intermediate process
2- Check, in particular, system connections, remotes and bus cables.
3- Switch on the eBike with the MODE button pressed for 3 seconds to delete a paired phone
4- Start the DEALER application and login as a user
5- Enter the SETTINGS option and click on the pairing with a new eBike option.
6- Go back to the main application window and wait until the application is paired (The eBike “connection” icon lights up in the top right corner). If not, repeat the procedure from step 3.
7- Enter the main DIAGNOSIS option and verify that the eSN of the devices matches
8- Make sure that there are no errors in the list of components
9- Go back to the main menu and press on the option STATUS and LOG
Press the ACTIVATED option

How to set up an ESN (E-Serial Number for Emotion Components)

Connect Dealer APP to bike

Check that it is connected



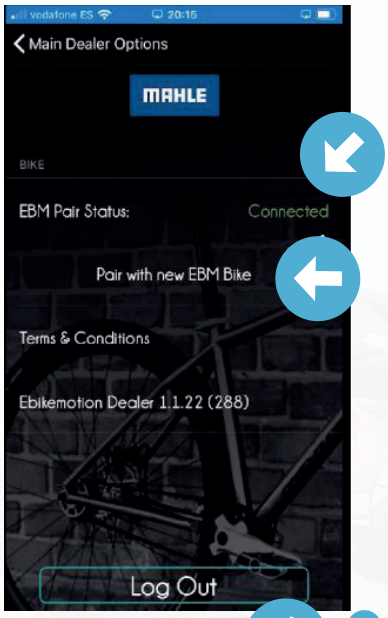

Return to Main Dealer Options

Open Diagnosis (A)

Check ESN value, if they don't match with the real number (B)

Press button e-SN (C)

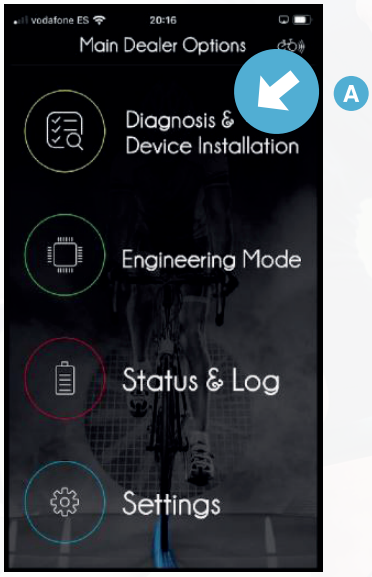



Select brand (A)

Write ESN (B)

If serial is less of 15 digit, please add 0 to left side to fill the box

Press button "Write" (C)



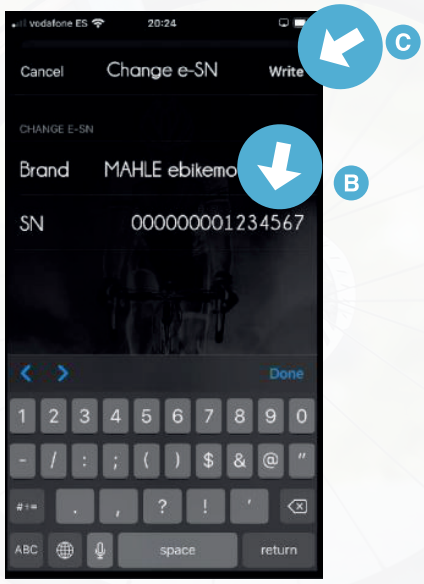

Check that ESN has written properly (A)

Come back to Main Menu (B)

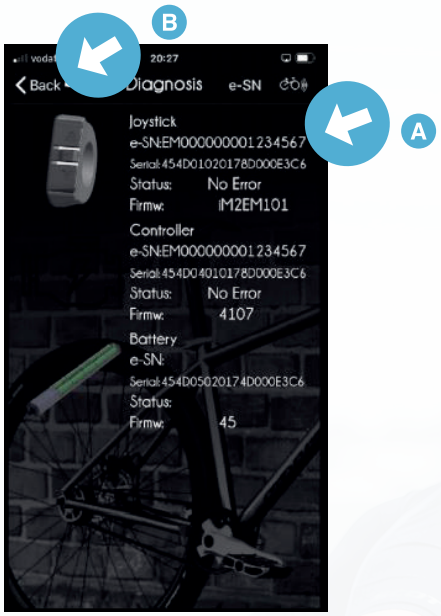

Select “Status & Log” (A)

Press “Activated – OK” (B)

If icon is blue the process has been completed (C)

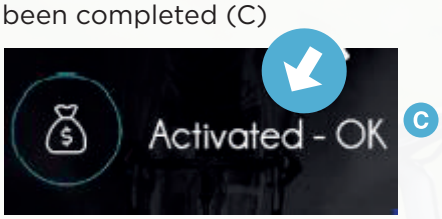

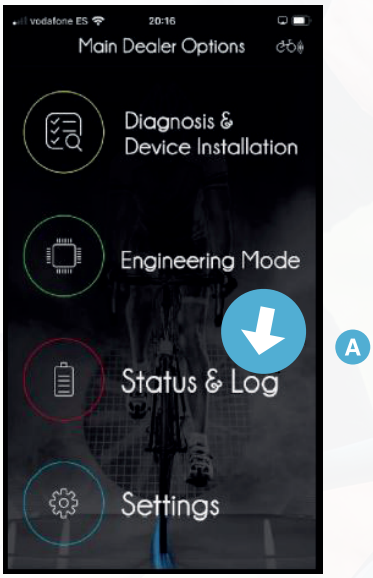

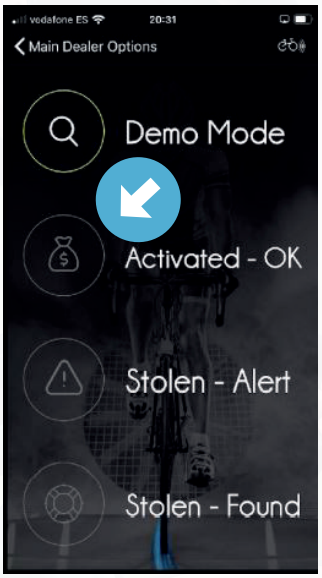

Wheel Removal

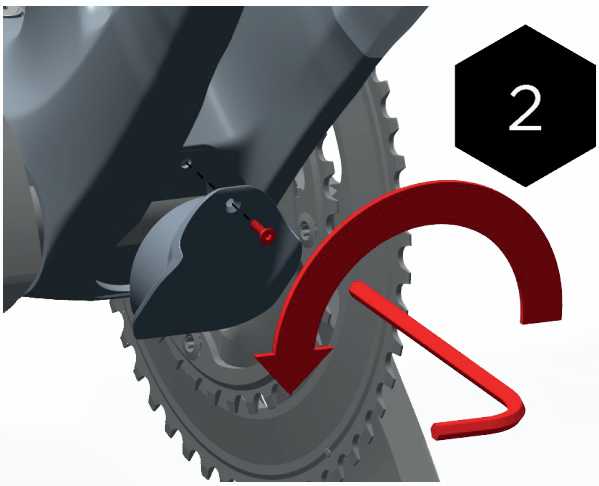

Remove BB Cover.
Retighten to 2Nm when required.

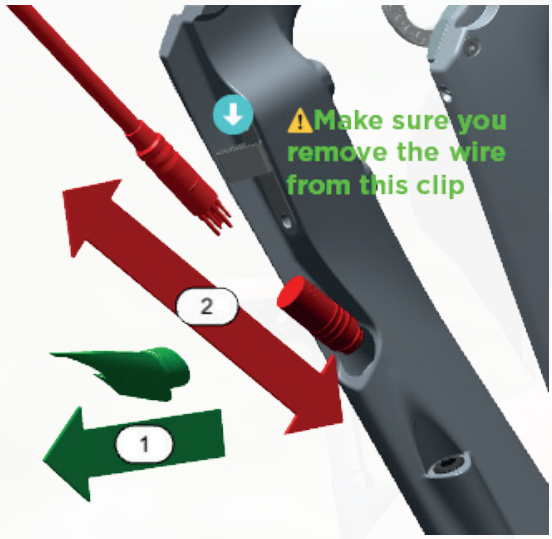

1. Remove rubber plug.
2. Feed through and disconnect power cable.



Remove non-drive side wheel nut and washer.
Retighten to 8Nm when required.

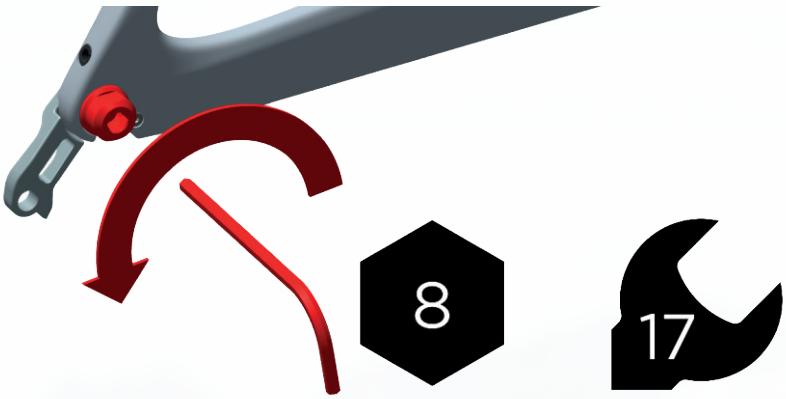

Remove drive side wheel nut and washer.
Retighten to 8Nm when required.



Remove Rear Wheel.

Battery Removal



1. Remove PAS grub screw.
2. Pull out PAS sensor towards wheel centre.
3. Retighten to 1.5Nm when required.



1. Remove Crank and BB according to MFG instructions.
2. Remove RD hanger screw.
3. Retighten to 2.5Nm when required.



Feed PAS cable out and remove plug.

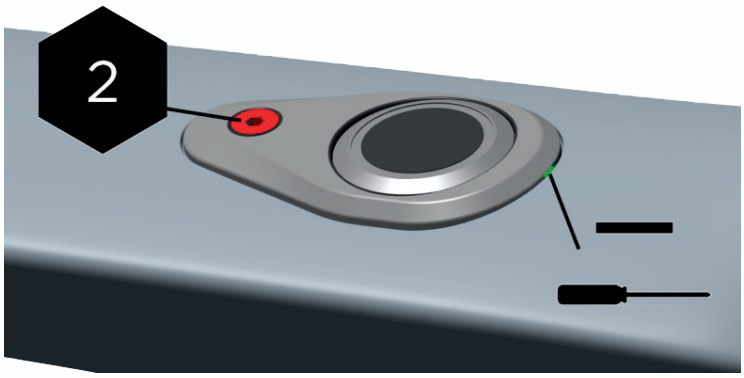

1. Remove Handlebar, Stem and Fork
2. Remove iWOC screw
3. Use small flat head screwdriver to release catch.
4. Retighten to 2Nm when required



Remove iWOC and unplug battery cable.



Remove 3 battery screws 3mm Allen Key.



Remove Battery.

Warranty Mahle Parts only for Dealers & Distributors

For all Distributors and Dealers Mahle Warranty parts will be claimable on B2B. Please follow the steps below. Double check in the E-Motion App if a solution is available before claiming any Mahle parts.

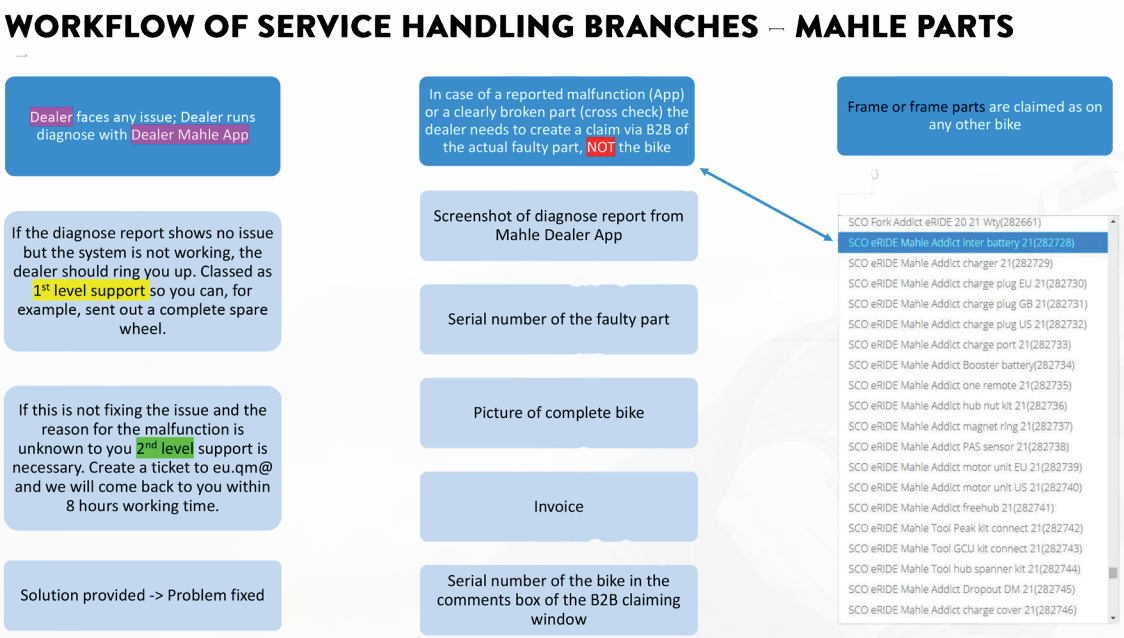

Spare Parts

⚠️Please use the explode view against the parts reference below to make sure you order the correct parts.

Item #	Part Number	Description
1	282659	SCO Fork Addict eRIDE PR 21 Wty
2	282660	SCO Fork Addict eRIDE 10 21 Wty
3	282661	SCO Fork Addict eRIDE 20 21 Wty
4	282658	SCO Fork Cont Addict eRIDE 10 21 Wty
5	282728	SCO eRIDE Mahle Addict inter battery 21
6	282730	SCO eRIDE Mahle Addict charge plug EU 21
7	282731	SCO eRIDE Mahle Addict charge plug GB 21
8	282732	SCO eRIDE Mahle Addict charge plug US 21
9	282735	SCO eRIDE Mahle Addict one remote 21
10	282736	SCO eRIDE Mahle Addict hub nut kit 21
11	282737	SCO eRIDE Mahle Addict magnet ring 21
12	282738	SCO eRIDE Mahle Addict PAS sensor 21
13	282814	SCO eRIDE Mahle Addict exter bat cage 21
14	282739	SCO eRIDE Mahle Addict motor unit EU 21
15	282740	SCO eRIDE Mahle Addict motor unit US 21

Item #	Part Number	Description
16	282741	SCO eRIDE Mahle Addict freehub 21
17	282745	SCO eRIDE Mahle Addict Dropout DM 21
18	282746	SCO eRIDE Mahle Addict charge cover 21
19	282746	SCO eRIDE Mahle Addict charge cover 21
20	282746	SCO eRIDE Mahle Addict charge cover 21
21	282746	SCO eRIDE Mahle Addict charge cover 21
22	282747	SCO eRIDE Mahle Addict bat/wire mount 21
23	283346	SCO eRIDE Mahle Addict FD mount 21
24	277547	SCO Stem spacer kit SY Crest iC
25	277550	SCO Stem Steerer cap SY Crest iC
26	277548	SCO Stem spacer kit SY RR iC
27	277549	SCO Stem steerer cap SY RR iC
28	275466	SYN Headset IS52/31.8 - IS52/40
29	277543	SCO Seatclamp Addict RC20
30	277025	SCO Cableguide kit Addict RC D 20
31	277028	SCO Axle front Addict RC / Plasma 6 TP 20

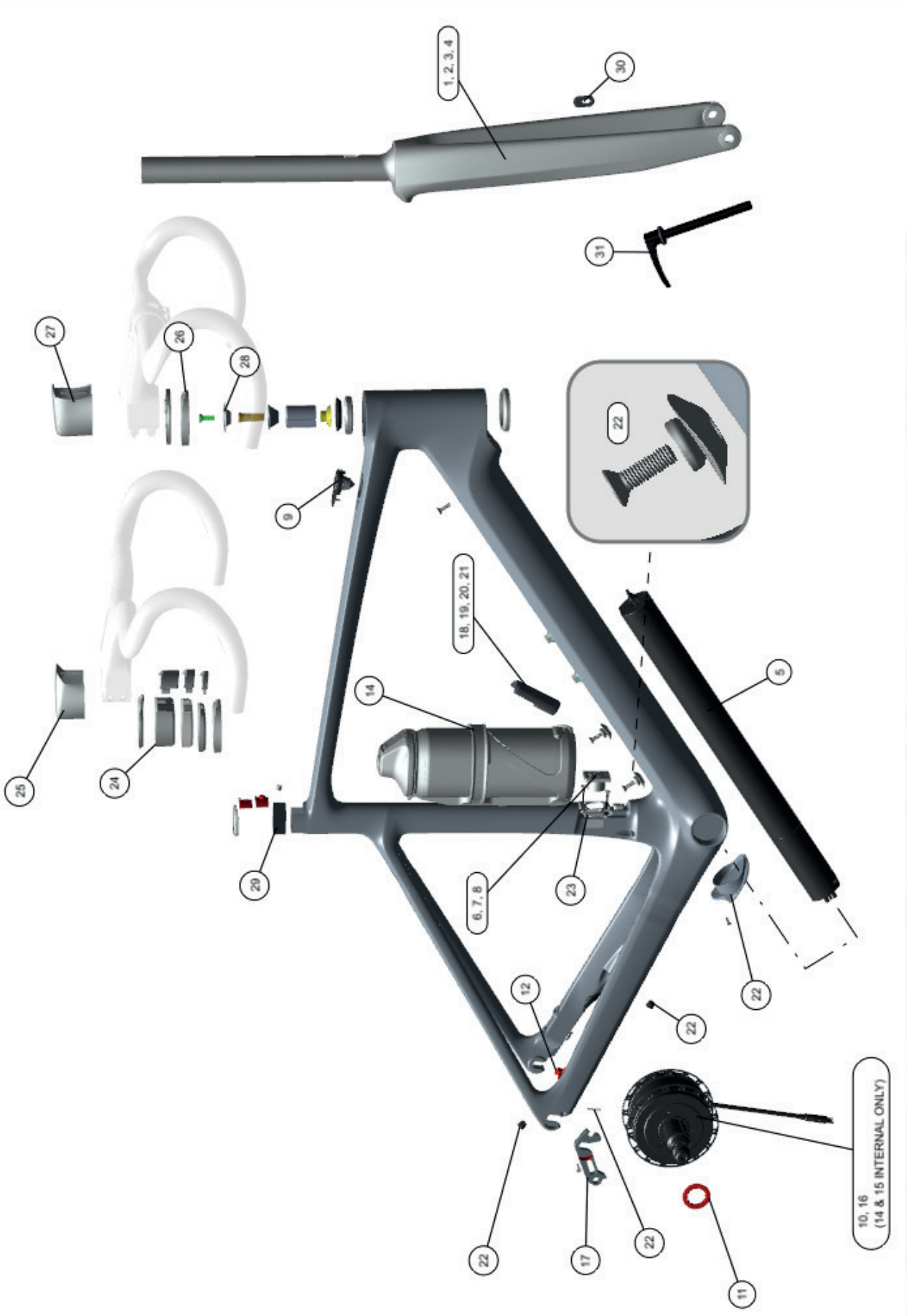
1, 2, 3, 4
30
31
27
26
28
9
22
18, 19, 20, 21
14
5
25
24
29
6, 7, 8
23
22
12
22
22
17
22
10, 16
(14 & 15 INTERNAL ONLY)
11

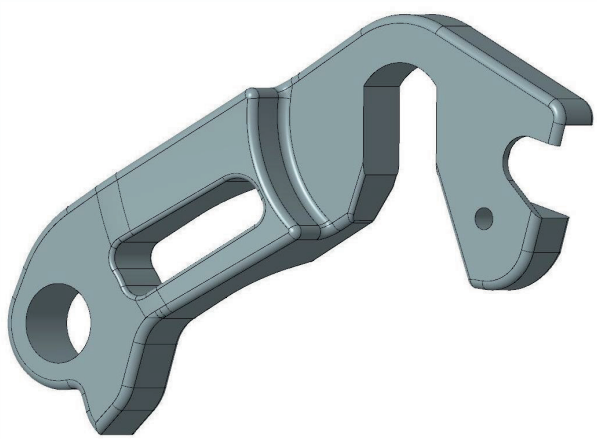

282745 SCO eRIDE Mahle Addict Dropout DM 21

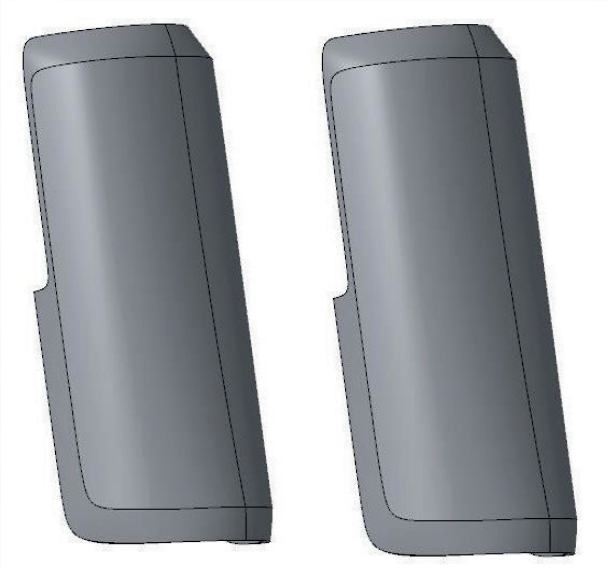

282746 SCO eRIDE Mahle Addict charge cover 21



283346 SCO eRIDE Mahle Addict FD mount 21



282728 SCO eRIDE Mahle Addict inter battery 21

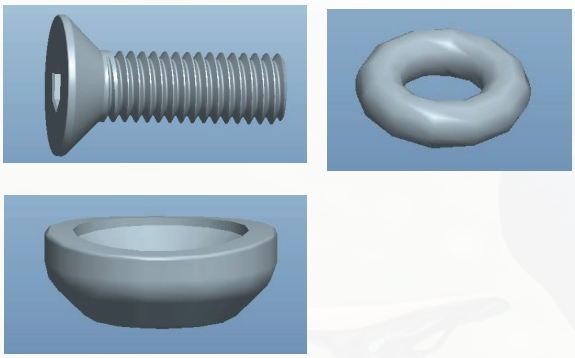

282747 SCO eRIDE Mahle Addict bat/wire mount 21



282729 SCO eRIDE Mahle Addict charger 21



282733 SCO eRIDE Mahle Addict charge port 21



282730 SCO eRIDE Mahle Addict charge plug EU 21



282731 SCO eRIDE Mahle Addict charge plug GB 21



282732 SCO eRIDE Mahle Addict Charge Plug US

Motor Related Parts & Topics



282739 SCO eRIDE Mahle Addict motor unit EU 21



282740 SCO eRIDE Mahle Addict motor unit US 21



282736 SCO eRIDE Mahle Addict hub nut kit 21





282744 SCO eRIDE Mahle Tool hub spanner kit 21



None drive side: A spindle securing nut, B washer with securing nose (silver), C plastic cover for motor cable
Drive side: D Freewheel securing nut, washer with securing nose (silver), A spindle securing nut.

⚠Torque for the spindle nuts is 20Nm!

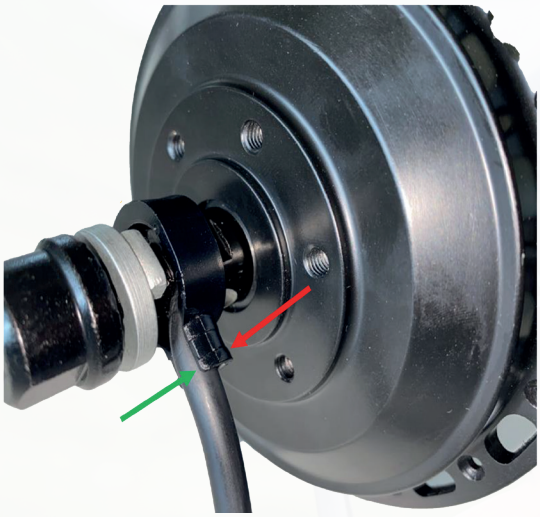

Especially important is the motor cable protecting plastic washer so the brake rotor will not damage it.
The (red) shield needs to point towards the hub, the open side (green) towards the frame.



Assembled hub in the dropout.

⚠For better visibility the motor plastic protection cap was removed.

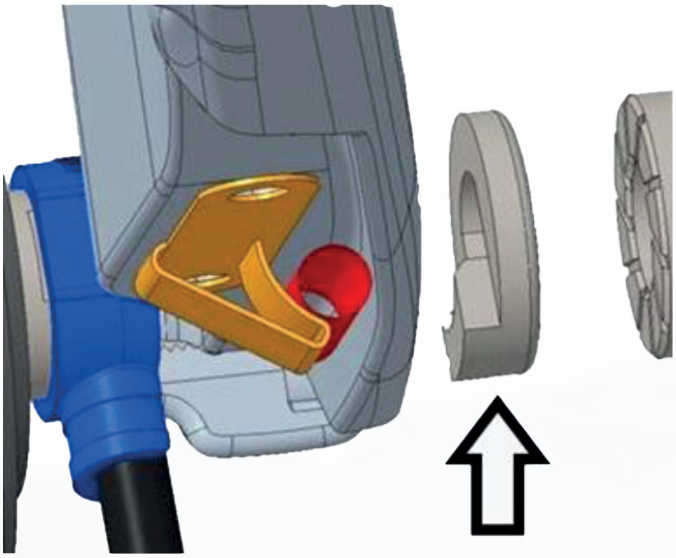

Make sure to always use the original washers that actually transmit the torque of the system, same principle as on a hub gear.

When installed correctly, ⚠5 mm of thread is still visible.



⚠⚠Please note that the maximum size of the rotor screws should not exceed 8mm of thread length.
This gives 6mm of thread inside the hub shell, more is damaging the motor internals of the electric machine!



The freehub always is connected to the outer plate of the motor unit.

If a freehub is faulty or has worn out bearings you always have to remove the whole unit.



If the motor needs replacing a full internal unit will be needs. Refer to the parts list at the beginning of the chapter.

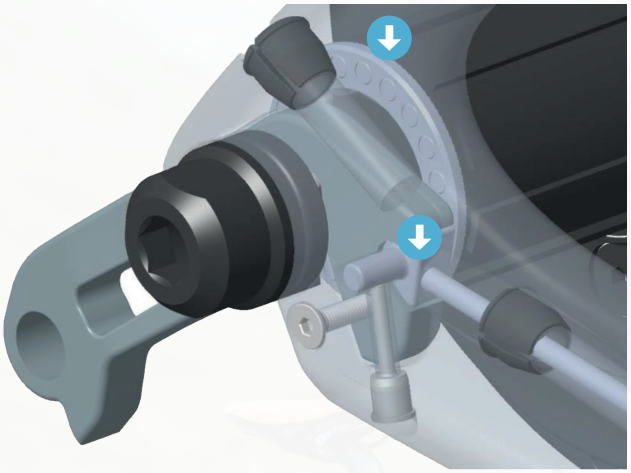

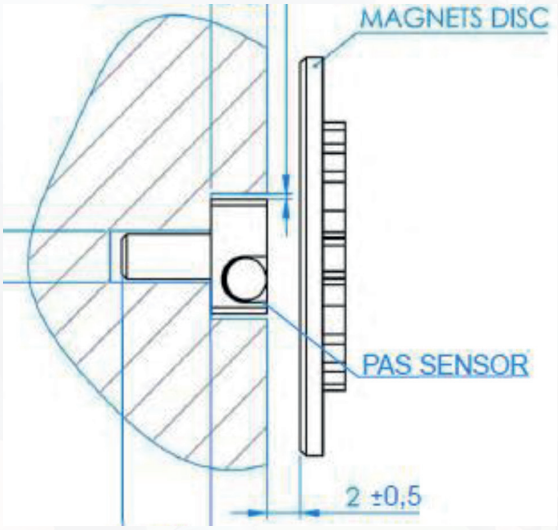

⚠It is very important to follow the given distance above to ensure a correct reading from the PAS sensor. The PAS sensor must be placed inside the dropout, taking care that the cavity inside the dropout for the PAS sensor has enough dept to protect it against any damage.



282738 SCO eRIDE Mahle Addict PAS sensor 21.



282735 SCO eRIDE Mahle Addict one remote 21.

Software Tools

282742 SCO eRIDE Mahle Tool Peak kit connect 21.



282743 SCO eRIDE Mahle Tool GPU kit connect 21.



RANGE BOOSTER



For the Range Booster you will need the following parts:

282814 SCO eRIDE Mahle Addict exter bat cage 21 (cage only)
282734 SCO eRIDE Mahle Addict Booster Battery (full Kit)





⚠Only to be used on the SEATTUBE, NOT on the downtube of the bike as the max. Thread length on
downtube bottle cage screws is 8mm and therefore not strong enough to hold the weight of the battery.

ADDICT eRIDE PREMIUM



ITEM	DESCRIPTION
282659	SCO Fork Addict eRIDE PR 21 Wty
283350	SCO Rim SY Capital 1.0 X40e 24H 21
275466	SYN Headset IS52/31.8 - IS52/42
283351	SCO Rim SY Capital 1.0 X40e 32H 21
277550	SCO Stem steerer cap SY Crest iC
271246	SCO Hub rep kit SY Merr/Cap 1.0D F
277547	SCO Stem spacer kit SY Crest iC
282741	SCO eRIDE Mahle Addict freehub 21
242489	SCO Headset Compression kit 1 1/4
282745	SCO eRIDE Mahle Addict Dropout DM 21
275409	SYN Bar/Stem Creston iC SL, 380mm
283346	SCO eRIDE Mahle Addict FD mount 21
275410	SYN Bar/Stem Creston iC SL, 400mm
282733	SCO eRIDE Mahle Addict charge port 21
275411	SYN Bar/Stem Creston iC SL, 420mm
282735	SCO eRIDE Mahle Addict one remote 21
275412	SYN Bar/Stem Creston iC SL, 440mm
282736	SCO eRIDE Mahle Addict hub nut kit 21
277543	SCO Seatclamp Addict RC 20
282737	SCO eRIDE Mahle Addict magnet ring 21
275437	SYN Seatpost Duncan Aero SL 0mm Offset
282738	SCO eRIDE Mahle Addict PAS sensor 21
275438	SYN Seatpost Duncan Aero SL 5mm Offset
282739	SCO eRIDE Mahle Addict motor unit EU 21
275439	SYN Seatpost Duncan Aero SL 20mm Offset
282740	SCO eRIDE Mahle Addict motor unit US 21
275445	SYN Saddle Belcarra R 1.0, Channel
282746	SCO eRIDE Mahle Addict charge cover 21
277028	SCO Axle front Addict RC/Plasma 6 TP 20
282747	SCO eRIDE Mahle Addict bat/wire mount 21
283343	SCO Spoke SY/Form rep kit Cap X40e F
282728	SCO eRIDE Mahle Addict inter battery 21
283342	SCO Spoke SY/Form rep kit Cap X40e R

ADDICT eRIDE 10



ITEM	DESCRIPTION
282660	SCO Fork Addict eRIDE 10 21 Wty
283350	SCO Rim SY Capital 1.0 X40e 24H 21
275466	SYN Headset IS52/31.8 - IS52/42
283351	SCO Rim SY Capital 1.0 X40e 32H 21
277042	SCO Stem top cover SY RR iC
271246	SCO Hub rep kit SY Merr/Cap 1.0D F
277549	SCO Stem steerer cap SY RR iC
282741	SCO eRIDE Mahle Addict freehub 21
277548	SCO Stem spacer kit SY RR iC
282745	SCO eRIDE Mahle Addict Dropout DM 21
242489	SCO Headset Compression kit 1 1/4
283346	SCO eRIDE Mahle Addict FD mount 21
275431	SYN Stem RR iC, 31,8mm
282733	SCO eRIDE Mahle Addict charge port 21
275413	SYN H.bar Creston iC 1.5 Compact
282735	SCO eRIDE Mahle Addict one remote 21
277543	SCO Seatclamp Addict RC 20
282736	SCO eRIDE Mahle Addict hub nut kit 21
275437	SYN Seatpost Duncan Aero SL 0mm Offset
282737	SCO eRIDE Mahle Addict magnet ring 21
275438	SYN Seatpost Duncan Aero SL 5mm Offset
282738	SCO eRIDE Mahle Addict PAS sensor 21
275439	SYN Seatpost Duncan Aero SL 20mm Offset
282739	SCO eRIDE Mahle Addict motor unit EU 21
275447	SYN Saddle Belcarra R 2.0, Channel
282740	SCO eRIDE Mahle Addict motor unit US 21
277028	SCO Axle front Addict RC/Plasma 6 TP 20
282746	SCO eRIDE Mahle Addict charge cover 21
283343	SCO Spoke SY/Form rep kit Cap X40e F
282747	SCO eRIDE Mahle Addict bat/wire mount 21
283342	SCO Spoke SY/Form rep kit Cap X40e R
282728	SCO eRIDE Mahle Addict inter battery 21

ADDICT eRIDE 20



ITEM	DESCRIPTION
282661	SCO Fork Addict eRIDE 20 21 Wty
283353	SCO Rim SY Capital 2.0 X25e 32H 21
275466	SYN Headset IS52/31.8 - IS52/42
271260	SCO Hub rep kit Form TXC-712 F 19
277042	SCO Stem top cover SY RR iC
282741	SCO eRIDE Mahle Addict freehub 21
277549	SCO Stem steerer cap SY RR iC
282745	SCO eRIDE Mahle Addict Dropout DM 21
277548	SCO Stem spacer kit SY RR iC
283346	SCO eRIDE Mahle Addict FD mount 21
242489	SCO Headset Compression kit 1 1/4
282733	SCO eRIDE Mahle Addict charge port 21
275431	SYN Stem RR iC, 31,8mm
282735	SCO eRIDE Mahle Addict one remote 21
277543	SCO Seatclamp Addict RC 20
282736	SCO eRIDE Mahle Addict hub nut kit 21
275437	SYN Seatpost Duncan Aero SL 0mm Offset
282737	SCO eRIDE Mahle Addict magnet ring 21
275438	SYN Seatpost Duncan Aero SL 5mm Offset
282738	SCO eRIDE Mahle Addict PAS sensor 21
275439	SYN Seatpost Duncan Aero SL 20mm Offset
282739	SCO eRIDE Mahle Addict motor unit EU 21
275447	SYN Saddle Belcarra R 2.0, Channel
282740	SCO eRIDE Mahle Addict motor unit US 21
277028	SCO Axle front Addict RC/Plasma 6 TP 20
282746	SCO eRIDE Mahle Addict charge cover 21
283345	SCO Spoke SY/Form rep kit Cap X25e F
282747	SCO eRIDE Mahle Addict bat/wire mount 21
283344	SCO Spoke SY/Form rep kit Cap X25e R
282728	SCO eRIDE Mahle Addict inter battery 21
283352	SCO Rim SY Capital 2.0 X25e 28H 21

CONT.ADDICT eRIDE 10



ITEM	DESCRIPTION
282658	SCO Fork Cont Addict eRIDE 10 21 Wty
283351	SCO Rim SY Capital 1.0 X40e 32H 21
275466	SYN Headset IS52/31.8 - IS52/42
271246	SCO Hub rep kit SY Merr/Cap 1.0D F
277042	SCO Stem top cover SY RR iC
282741	SCO eRIDE Mahle Addict freehub 21
277549	SCO Stem steerer cap SY RR iC
282745	SCO eRIDE Mahle Addict Dropout DM 21
277548	SCO Stem spacer kit SY RR iC
283346	SCO eRIDE Mahle Addict FD mount 21
242489	SCO Headset Compression kit 1 1/4
282733	SCO eRIDE Mahle Addict charge port 21
275431	SYN Stem RR iC, 31,8mm
282735	SCO eRIDE Mahle Addict one remote 21
275413	SYN H.bar Creston iC 1.5 Compact
282736	SCO eRIDE Mahle Addict hub nut kit 21
277543	SCO Seatclamp Addict RC 20
282737	SCO eRIDE Mahle Addict magnet ring 21
275437	SYN Seatpost Duncan Aero SL 0mm Offset
282738	SCO eRIDE Mahle Addict PAS sensor 21
275438	SYN Seatpost Duncan Aero SL 5mm Offset
282739	SCO eRIDE Mahle Addict motor unit EU 21
275439	SYN Seatpost Duncan Aero SL 20mm Offset
282740	SCO eRIDE Mahle Addict motor unit US 21
277028	SCO Axle front Addict RC/Plasma 6 TP 20
282746	SCO eRIDE Mahle Addict charge cover 21
283343	SCO Spoke SY/Form rep kit Cap X40e F
282747	SCO eRIDE Mahle Addict bat/wire mount 21
283342	SCO Spoke SY/Form rep kit Cap X40e R
282728	SCO eRIDE Mahle Addict inter battery 21
283350	SCO Rim SY Capital 1.0 X40e 24H 21

SILENCE eRIDE



The Silence eRIDE remains the same as the previous year.

⚠Please note, that no parts are to be changed or replaced unless they are the same as the original parts

Claiming Procedure:

1) Claim the frame as normal via B2B.
2) You must then send a copy of the customer's Certificate of Conformity (each bike has its own COC) attached to the claim/C4C ticket.
3) Once the claim has been accepted you must send proof of destruction. The claim will not proceed further without this proof.
4) The replacement frame will then be sent to SCOTT DE so the VIN number can be engraved onto the new frame.
5) The frame will then be shipped.

⚠Please note that the Silence eRIDE 30 is a 25km/h and does not follow these procedures.

SILENCE eRIDE EVO SP.



ITEM	DESCRIPTION
285806	SCO Fork Silence eRIDE Evo 45KM 21
278362	SCO eRIDE Dropout set Silence belt 20
228441	SYN Headset ZS44/28.6 - ZS55/40
278370	SCO eRIDE Bat cover Silence 20
285822	SCO eRIDE Stem Silence 21 Wty
278372	SCO eRIDE Motor cov/chaingua. Silence 20
285821	SCO eRIDE Handlebars Silence 21 Wty
278366	SCO eRIDE Cableguide set Silence 20
252420	SCO E-bike Seatpost E-Silence
277040	SCO E-bike Cable cover DT silence 20
278387	SCO eRIDE Seat clamp Silence 20 Wty
278375	SCO eRIDE Charge port BO 20
279073	SCO eRIDE Front axle Silence Evo 20 Wty
279126	SCO eRIDE Kickstand Silence 20 Wty
266786	SCO Hub rep kit SY/Form XR2.0 F 6blt 18
278384	SCO eRIDE Fender Silence Evo 20 Wty
278379	SCO eRIDE Rim Silence 20 Wty
278388	SCO eRIDE Rack Silence 20 Wty
287407	SCO eRIDE Kickstand foot Silence 21 Wty

SILENCE eRIDE 10 MEN



ITEM	DESCRIPTION
228441	SYN Headset ZS44/28.6 - ZS55/40
278372	SCO eRIDE Motor cov/chaingua. Silence 20
285822	SCO eRIDE Stem Silence 21 Wty
278366	SCO eRIDE Cableguide set Silence 20
285821	SCO eRIDE Handlebars Silence 21 Wty
277040	SCO E-bike Cable cover DT silence 20
252420	SCO E-bike Seatpost E-Silence
278375	SCO eRIDE Charge port BO 20
278387	SCO eRIDE Seat clamp Silence 20 Wty
279126	SCO eRIDE Kickstand Silence 20 Wty
277033	SCO Axle RWS rear 148x12 boost plug T25
278383	SCO eRIDE Fender Silence 10/20 20 Wty
278379	SCO eRIDE Rim Silence 20 Wty
278388	SCO eRIDE Rack Silence 20 Wty
278363	SCO eRIDE Dropout set Silence gear 20
277799	SCO E-Silence battery range booster
278370	SCO eRIDE Bat cover Silence 20
278381	SCO eRIDE Light Silence 10/20 20 Wty
278360	SCO eRIDE Bat mount Silence 20
287407	SCO eRIDE Kickstand foot Silence 21 Wty

SILENCE eRIDE 10 LADY



ITEM	DESCRIPTION
228441	SYN Headset ZS44/28.6 - ZS55/40
278372	SCO eRIDE Motor cov/chaingua. Silence 20
285822	SCO eRIDE Stem Silence 21 Wty
278366	SCO eRIDE Cableguide set Silence 20
285821	SCO eRIDE Handlebars Silence 21 Wty
277040	SCO E-bike Cable cover DT silence 20
252420	SCO E-bike Seatpost E-Silence
278375	SCO eRIDE Charge port BO 20
278387	SCO eRIDE Seat clamp Silence 20 Wty
279126	SCO eRIDE Kickstand Silence 20 Wty
277033	SCO Axle RWS rear 148x12 boost plug T25
278383	SCO eRIDE Fender Silence 10/20 20 Wty
278379	SCO eRIDE Rim Silence 20 Wty
278388	SCO eRIDE Rack Silence 20 Wty
278363	SCO eRIDE Dropout set Silence gear 20
277799	SCO E-Silence battery range booster
278370	SCO eRIDE Bat cover Silence 20
278381	SCO eRIDE Light Silence 10/20 20 Wty
278360	SCO eRIDE Bat mount Silence 20

SILENCE eRIDE 20 MEN



ITEM	DESCRIPTION
228441	SYN Headset ZS44/28.6 - ZS55/40
278360	SCO eRIDE Bat mount Silence 20
285822	SCO eRIDE Stem Silence 21 Wty
278372	SCO eRIDE Motor cov/chaingua. Silence 20
285821	SCO eRIDE Handlebars Silence 21 Wty
278366	SCO eRIDE Cableguide set Silence 20
252420	SCO E-bike Seatpost E-Silence
277040	SCO E-bike Cable cover DT silence 20
278387	SCO eRIDE Seat clamp Silence 20 Wty
278375	SCO eRIDE Charge port BO 20
277033	SCO Axle RWS rear 148x12 boost plug T25
279126	SCO eRIDE Kickstand Silence 20 Wty
278379	SCO eRIDE Rim Silence 20 Wty
278383	SCO eRIDE Fender Silence 10/20 20 Wty
278363	SCO eRIDE Dropout set Silence gear 20
278388	SCO eRIDE Rack Silence 20 Wty
278370	SCO eRIDE Bat cover Silence 20
278381	SCO eRIDE Light Silence 10/20 20 Wty
287407	SCO eRIDE Kickstand foot Silence 21 Wty

SILENCE eRIDE 20 LADY



ITEM	DESCRIPTION
228441	SYN Headset ZS44/28.6 - ZS55/40
278360	SCO eRIDE Bat mount Silence 20
285822	SCO eRIDE Stem Silence 21 Wty
278372	SCO eRIDE Motor cov/chaingua. Silence 20
285821	SCO eRIDE Handlebars Silence 21 Wty
278366	SCO eRIDE Cableguide set Silence 20
252420	SCO E-bike Seatpost E-Silence
277040	SCO E-bike Cable cover DT silence 20
278387	SCO eRIDE Seat clamp Silence 20 Wty
278375	SCO eRIDE Charge port BO 20
277033	SCO Axle RWS rear 148x12 boost plug T25
279126	SCO eRIDE Kickstand Silence 20 Wty
278379	SCO eRIDE Rim Silence 20 Wty
278383	SCO eRIDE Fender Silence 10/20 20 Wty
278363	SCO eRIDE Dropout set Silence gear 20
278388	SCO eRIDE Rack Silence 20 Wty
278370	SCO eRIDE Bat cover Silence 20
278381	SCO eRIDE Light Silence 10/20 20 Wty
287407	SCO eRIDE Kickstand foot Silence 21 Wty

SILENCE eRIDE 30 MEN



ITEM	DESCRIPTION
228441	SYN Headset ZS44/28.6 - ZS55/40
278360	SCO eRIDE Bat mount Silence 20
285822	SCO eRIDE Stem Silence 21 Wty
278372	SCO eRIDE Motor cov/chaingua. Silence 20
285821	SCO eRIDE Handlebars Silence 21 Wty
278366	SCO eRIDE Cableguide set Silence 20
252420	SCO E-bike Seatpost E-Silence
277040	SCO E-bike Cable cover DT silence 20
278387	SCO eRIDE Seat clamp Silence 20 Wty
278375	SCO eRIDE Charge port BO 20
277033	SCO Axle RWS rear 148x12 boost plug T25
279126	SCO eRIDE Kickstand Silence 20 Wty
278379	SCO eRIDE Rim Silence 20 Wty
278383	SCO eRIDE Fender Silence 10/20 20 Wty
278363	SCO eRIDE Dropout set Silence gear 20
285819	SCO eRIDE Carrier Silence 30 21 Wty
282753	SCO eRIDE Bat cover Silence 21
287407	SCO eRIDE Kickstand foot Silence 21 Wty

SILENCE eRIDE 30 LADY



ITEM	DESCRIPTION
228441	SYN Headset ZS44/28.6 - ZS55/40
278360	SCO eRIDE Bat mount Silence 20
285822	SCO eRIDE Stem Silence 21 Wty
278372	SCO eRIDE Motor cov/chaingua. Silence 20
285821	SCO eRIDE Handlebars Silence 21 Wty
278366	SCO eRIDE Cableguide set Silence 20
252420	SCO E-bike Seatpost E-Silence
277040	SCO E-bike Cable cover DT silence 20
278387	SCO eRIDE Seat clamp Silence 20 Wty
278375	SCO eRIDE Charge port BO 20
277033	SCO Axle RWS rear 148x12 boost plug T25
279126	SCO eRIDE Kickstand Silence 20 Wty
278379	SCO eRIDE Rim Silence 20 Wty
278383	SCO eRIDE Fender Silence 10/20 20 Wty
278363	SCO eRIDE Dropout set Silence gear 20
285819	SCO eRIDE Carrier Silence 30 21 Wty
282753	SCO eRIDE Bat cover Silence 21
287407	SCO eRIDE Kickstand foot Silence 21 Wty

RANSOM eRIDE



Ransom eRIDE Technical Data:

Seatpost	31.6
Seatpost Clamp	34.9
Travel	180mm
Shock length	205mm
Shock stroke	65mm
Hardware mainframe	Trunnion
Hardware linkage	8x30mm
Chainring/crank size	34T/165mm
Rotor size	F- 203mm R-203mm

External dimensions/Shock identification:

Eye to Eye: 205mm

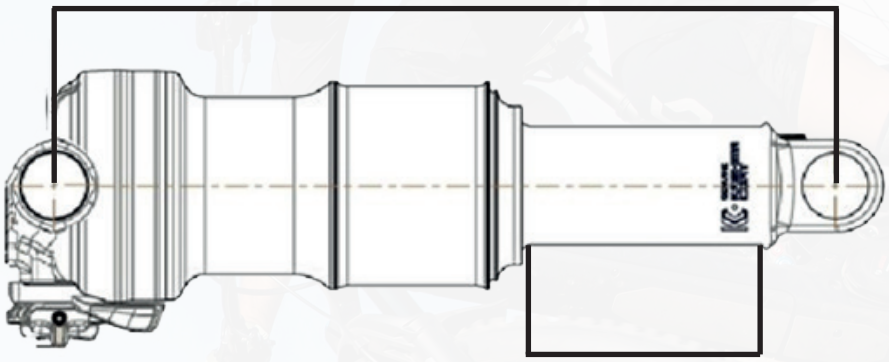

Stroke: 65mm

The sock hardware is the same as the normal Ransom:

266575 - SCO Shock mount hardware Gen18 Ran19

If you do not have a local agent that can help you the top bush kit is available from Scott:

266577 - SCO Shock mount bush set Fox Gen18 Ran19

⚠**Please note that all Ransom eRIDE are Spec´d without a Twinloc.**



Forkstop Headset:

Genius and Ransom eRIDE shares the same Forkstop headset.

Model	Headset part
Strike carbon 21	274747
Strike alloy 21	274749
Genius carbon 21	279747
Genius alloy 21	279747
Ransom 21	279747

279747 - SCO eRIDE Headset forkstop Genius 20



279749 - SCO eRIDE Headset Strike alloy 20



⚠it is not possible to remove the lower bearing from this headset. In case a new bearing is needed
the whole lower cup must be replaced.

New Swingarm Rep Kit: 285497 SCO eRIDE Swingarm Rep kit Ransom 21

The swingarm repair kit is almost the same as the Genius eRIDE with one slight difference.
The linkage pivot bolt is slightly longer and stronger.

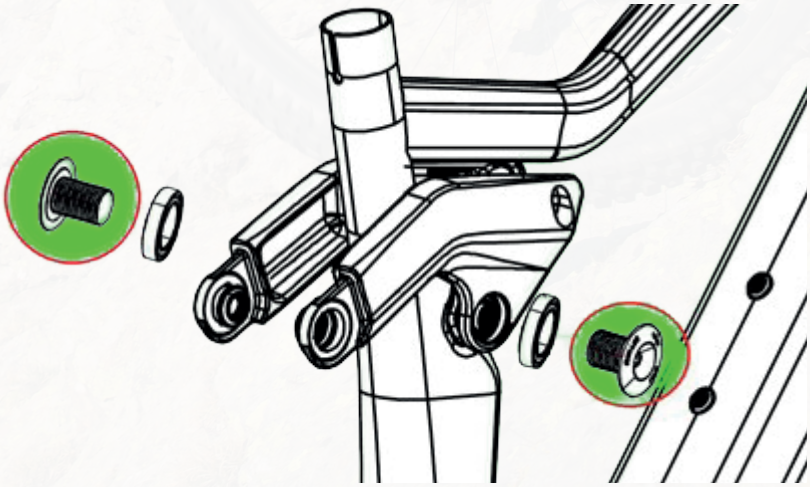

Although the Genius eRIDE repair kit will fit, the linkage pivot bolts are not strong enough for the Ransom eRIDE, all other part will work fine.

Small parts:
All other parts such as battery/drive unit covers and cable guides are the same as last year's Genius/Strike eRIDE Alloy Model

Cable Guide Routing:

The Ransom eRide shares the same cable guides as the other MTB eRide models
Due to no Twinloc the cable routing will be different with the seatpost cable routed on the Drive side.

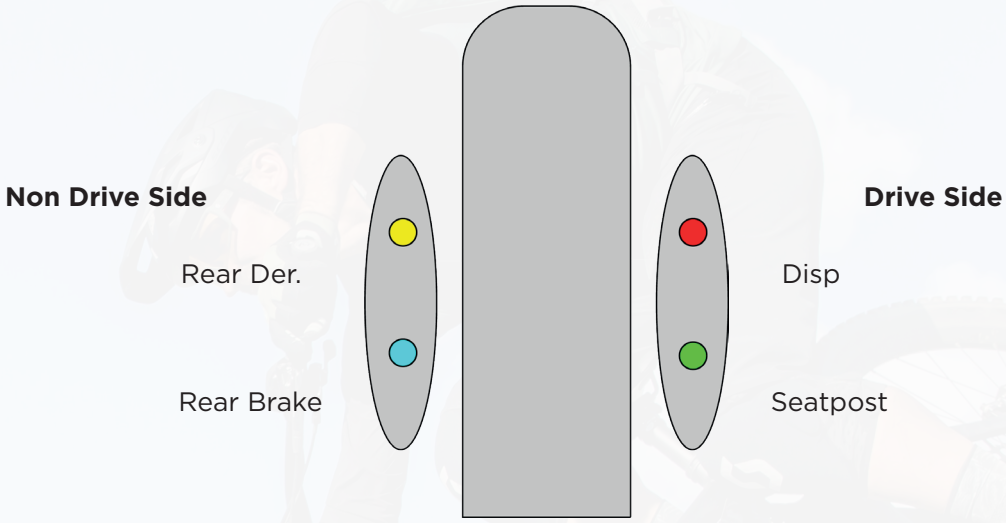

No Range Booster:

It is not possible to mount the range booster on the new Ransom eRIDE.
The Front triangle only have mounts for the bottle cage and none for the range booster to be fitted.

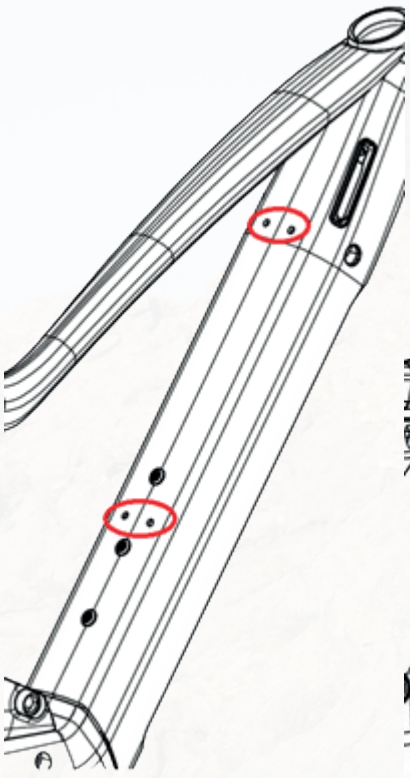

Genius eRIDE



Ransom eRIDE



RANSOM eRIDE 910



ITEM	DESCRIPTION
282449	SCO Chainstays Ransom eRIDE 910 21
282476	SCO Seatstays Ransom eRIDE 910 21
254092	SCO Dropout hanger boost TA12 alloy 17
278365	SCO eRIDE Cableguide set Gen/Str/Ax-E 20
278364	SCO eRIDE D/T fork bump Gen/Str/Axis-E20
276484	SCO E-bike CS prote Gen/Strike/Axis-E 20
282756	SCO eRIDE linkage Ransom 21
274487	SCO Screw set Up pivots Trunnion version
285497	SCO eRIDE Swingarm Rep kit Ransom 21
266575	SCO Shock mount hardware Gen18 Ran19
266577	SCO Shock mount bush set Fox Gen18 Ran19
285810	SCO Rear shock Ran eRIDE Fox X2 21 Wty
279747	SCO eRIDE Headset forkstop Genius 20
262082	SCO Headset spacers+cap Syncros 1.5 MTB
270198	SYN Stem XM1.5, 31.8mm
250562	SYN Computer Mount for MTB Stem FL
270197	SYN H.bar Hixon1.5 Rise, 20mm Rise
250574	SYN Grips Pro, Lock-On
223309	SCO Seatclamp 34.9mm CrMo bolt
270207	SYN Saddle Tofino R 1.5, Channel
277032	SCO Axle RWS rear 148x12 boost plug T30
242437	SCO Hub-rep kit Syncros Formula CL811
242438	SCO Hub-rep kit Syncros Formula CL14811
266608	SCO Rim SY/X-30s D 32H 18
266602	SCO E-bike Chainguide Genius 18
278358	SCO eRIDE Bat mount up Gen/Str/Ax-E 20
278368	SCO eRIDE Bat cover Gen/Str/Ax-E 20
278371	SCO eRIDE Motor cov Gen/Str/Ax-E 20
278375	SCO eRIDE Charge port BO 20
266595	SCO E-bike Comp magnet Spark/Genius 18

RANSOM eRIDE 920



ITEM	DESCRIPTION
282450	SCO Chainstays Ransom eRIDE 920 21
282477	SCO Seatstays Ransom eRIDE 920 21
254092	SCO Dropout hanger boost TA12 alloy 17
278365	SCO eRIDE Cableguide set Gen/Str/Ax-E 20
276484	SCO E-bike CS prote Gen/Strike/Axis-E 20
278364	SCO eRIDE D/T fork bump Gen/Str/Axis-E20
282756	SCO eRIDE linkage Ransom 21
274487	SCO Screw set Up pivots Trunnion version
285497	SCO eRIDE Swingarm Rep kit Ransom 21
266575	SCO Shock mount hardware Gen18 Ran19
266577	SCO Shock mount bush set Fox Gen18 Ran19
285810	SCO Rear shock Ran eRIDE Fox X2 21 Wty
279747	SCO eRIDE Headset forkstop Genius 20
262082	SCO Headset spacers+cap Syncros 1.5 MTB
270198	SYN Stem XM1.5, 31.8mm
250562	SYN Computer Mount for MTB Stem FL
250574	SYN Grips Pro, Lock-On
283359	SCO Seatpost Remote Syncros I-Spec 2 21
223309	SCO Seatclamp 34.9mm CrMo bolt
270211	SYN Saddle Tofino R 2.0, Channel
278396	SCO Seatpost-Serv Air cartkit Duncan 2.5
278398	SCO Seatpost-Serv.seal kit Duncan 2.5
277032	SCO Axle RWS rear 148x12 boost plug T30
242437	SCO Hub-rep kit Syncros Formula CL811
271258	SCO Hub rep kit Form ECT-148S R 19
266609	SCO Rim SY/Alex MD30 32H 18
266602	SCO E-bike Chainguide Genius 18
278358	SCO eRIDE Bat mount up Gen/Str/Ax-E 20
278368	SCO eRIDE Bat cover Gen/Str/Ax-E 20
278371	SCO eRIDE Motor cov Gen/Str/Ax-E 20
278375	SCO eRIDE Charge port BO 20
266595	SCO E-bike Comp magnet Spark/Genius 18

STRIKE eRIDE &
CONTESSA STRIKE eRIDE



STRIKE eRIDE 900 PREM.



ITEM	DESCRIPTION
282456	SCO Chainstays Strike eRIDE PRE 21
282483	SCO Seatstays Strike eRIDE PRE 21
254092	SCO Dropout hanger boost TA12 alloy 17
278367	SCO eRIDE Cableguide set Genius CB 20
266600	SCO E-bike Shock cableguide Sp/Gen 18
278364	SCO eRIDE D/T fork bump Gen/Str/Axis-E20
276484	SCO E-bike CS prote Gen/Strike/Axis-E 20
282755	SCO eRIDE linkage Strike 21
274487	SCO Screw set Up pivots Trunnion version
271273	SCO E-bike Swingarm rep kit all 19
266575	SCO Shock mount hardware Gen18 Ran19
266577	SCO Shock mount bush set Fox Gen18 Ran19
272445	SCO Rear shock Strike eRide Fox Nude 19
279747	SCO eRIDE Headset forkstop Genius 20
262082	SCO Headset spacers+cap Syncros 1.5 MTB
250565	SYN Stem FL1.5, 31.8mm
270197	SYN H.bar Hixon1.5 Rise, 20mm Rise
250576	SYN Grips Comfort, Lock-On
272451	SCO Twinloc lever down clamp 19
223309	SCO Seatclamp 34.9mm CrMo bolt
277032	SCO Axle RWS rear 148x12 boost plug T30
242437	SCO Hub-rep kit Syncros Formula CL811
271258	SCO Hub-rep kit Form ECT-148S R 19
266608	SCO Rim SY/X-30s D 32H 18
266602	SCO E-bike Chainguide Genius 18
278389	SCO eRIDE crank arms FSA745 Gen4 20 Wty
278358	SCO eRIDE Bat mount up Gen/Str/Ax-E 20
281308	SCO eRIDE Bat cover Gen/strike carbon 20
285818	SCO eRIDE Motor cov Gen/strike carbon 21
278375	SCO eRIDE Charge port BO 20
265596	SYN Trail fender
266595	SCO E-bike Comp magnet Spark/Genius 18

STRIKE eRIDE 900



ITEM	DESCRIPTION
282457	SCO Chainstays Strike eRIDE 900 21
282484	SCO Seatstays Strike eRIDE 900 21
254092	SCO Dropout hanger boost TA12 alloy 17
278367	SCO eRIDE Cableguide set Genius CB 20
266600	SCO E-bike Shock cableguide Sp/Gen 18
278364	SCO eRIDE D/T fork bump Gen/Str/Axis-E20
276484	SCO E-bike CS prote Gen/Strike/Axis-E 20
282755	SCO eRIDE linkage Strike 21
274487	SCO Screw set Up pivots Trunnion version
271273	SCO E-bike Swingarm rep kit all 19
266575	SCO Shock mount hardware Gen18 Ran19
266577	SCO Shock mount bush set Fox Gen18 Ran19
272445	SCO Rear shock Strike eRide Fox Nude 19
279747	SCO eRIDE Headset forkstop Genius 20
262082	SCO Headset spacers+cap Syncros 1.5 MTB
250566	SYN Stem FL2.0 31.8mm
250576	SYN Grips Comfort, Lock-On
272451	SCO Twinloc lever down clamp 19
262070	SCO Seatpost-Remote syncros 2.0
223309	SCO Seatclamp 34.9mm CrMo bolt
278396	SCO Seatpost-Serv Air cartkit Duncan 2.5
278398	SCO Seatpost-Serv.seal kit Duncan 2.5
277032	SCO Axle RWS rear 148x12 boost plug T30
242437	SCO Hub-rep kit Syncros Formula CL811
242439	SCO Hub-rep kit Syncros Formula CL148S
266609	SCO Rim SY/Alex MD30 32H 18
266602	SCO E-bike Chainguide Genius 18
277346	BGM Crankset FSA CK320 GEN4 20
278358	SCO eRIDE Bat mount up Gen/Str/Ax-E 20
281308	SCO eRIDE Bat cover Gen/strike carbon 20
285818	SCO eRIDE Motor cov Gen/strike carbon 21
278375	SCO eRIDE Charge port BO 20
266595	SCO E-bike Comp magnet Spark/Genius 18

STRIKE eRIDE 910



ITEM	DESCRIPTION
282458	SCO Chainstays Strike eRIDE 910 21
282485	SCO Seatstays Strike eRIDE 910 21
254092	SCO Dropout hanger boost TA12 alloy 17
278365	SCO eRIDE Cableguide set Gen/Str/Ax-E 20
266600	SCO E-bike Shock cableguide Sp/Gen 18
278364	SCO eRIDE D/T fork bump Gen/Str/Axis-E20
276484	SCO E-bike CS prote Gen/Strike/Axis-E 20
282755	SCO eRIDE linkage Strike 21
274487	SCO Screw set Up pivots Trunnion version
271273	SCO E-bike Swingarm rep kit all 19
266575	SCO Shock mount hardware Gen18 Ran19
266577	SCO Shock mount bush set Fox Gen18 Ran19
272445	SCO Rear shock Strike eRide Fox Nude 19
279749	SCO eRIDE Headset Strike alloy 20
262082	SCO Headset spacers+cap Syncros 1.5 MTB
250565	SYN Stem FL1.5, 31.8mm
270197	SYN H.bar Hixon1.5 Rise, 20mm Rise
250576	SYN Grips Comfort, Lock-On
272451	SCO Twinloc lever down clamp 19
223309	SCO Seatclamp 34.9mm CrMo bolt
277032	SCO Axle RWS rear 148x12 boost plug T30
266608	SCO Rim SY/X-30s D 32H 18
266602	SCO E-bike Chainguide Genius 18
278389	SCO eRIDE crank arms FSA745 Gen4 20 Wty
278358	SCO eRIDE Bat mount up Gen/Str/Ax-E 20
278368	SCO eRIDE Bat cover Gen/Str/Ax-E 20
278371	SCO eRIDE Motor cov Gen/Str/Ax-E 20
278375	SCO eRIDE Charge port BO 20
266595	SCO E-bike Comp magnet Spark/Genius 18
265596	SYN Trail fender

STRIKE eRIDE 920



ITEM	DESCRIPTION
282459	SCO Chainstays Strike eRIDE 920 21
282486	SCO Seatstays Strike eRIDE 920 21
254092	SCO Dropout hanger boost TA12 alloy 17
278365	SCO eRIDE Cableguide set Gen/Str/Ax-E 20
266600	SCO E-bike Shock cableguide Sp/Gen 18
278364	SCO eRIDE D/T fork bump Gen/Str/Axis-E20
276484	SCO E-bike CS prote Gen/Strike/Axis-E 20
282755	SCO eRIDE linkage Strike 21
274487	SCO Screw set Up pivots Trunnion version
271273	SCO E-bike Swingarm rep kit all 19
266575	SCO Shock mount hardware Gen18 Ran19
266577	SCO Shock mount bush set Fox Gen18 Ran19
272445	SCO Rear shock Strike eRide Fox Nude 19
279749	SCO eRIDE Headset Strike alloy 20
262082	SCO Headset spacers+cap Syncros 1.5 MTB
250566	SYN Stem FL2.0 31.8mm
250576	SYN Grips Comfort, Lock-On
272451	SCO Twinloc lever down clamp 19
262070	SCO Seatpost-Remote syncros 2.0
223309	SCO Seatclamp 34.9mm CrMo bolt
278396	SCO Seatpost-Serv Air cartkit Duncan 2.5
278398	SCO Seatpost-Serv.seal kit Duncan 2.5
277032	SCO Axle RWS rear 148x12 boost plug T30
266609	SCO Rim SY/Alex MD30 32H 18
266602	SCO E-bike Chainguide Genius 18
278389	SCO eRIDE crank arms FSA745 Gen4 20 Wty
278358	SCO eRIDE Bat mount up Gen/Str/Ax-E 20
278368	SCO eRIDE Bat cover Gen/Str/Ax-E 20
278371	SCO eRIDE Motor cov Gen/Str/Ax-E 20
278375	SCO eRIDE Charge port BO 20
266595	SCO E-bike Comp magnet Spark/Genius 18

STRIKE eRIDE 930



ITEM	DESCRIPTION
282460	SCO Chainstays Strike eRIDE 930 21
282487	SCO Seatstays Strike eRIDE 930 21
254092	SCO Dropout hanger boost TA12 alloy 17
278365	SCO eRIDE Cableguide set Gen/Str/Ax-E 20
266600	SCO E-bike Shock cableguide Sp/Gen 18
278364	SCO eRIDE D/T fork bump Gen/Str/Axis-E20
276484	SCO E-bike CS prote Gen/Strike/Axis-E 20
282755	SCO eRIDE linkage Strike 21
274487	SCO Screw set Up pivots Trunnion version
271273	SCO E-bike Swingarm rep kit all 19
266575	SCO Shock mount hardware Gen18 Ran19
266577	SCO Shock mount bush set Fox Gen18 Ran19
272445	SCO Rear shock Strike eRide Fox Nude 19
279749	SCO eRIDE Headset Strike alloy 20
262082	SCO Headset spacers+cap Syncros 1.5 MTB
250566	SYN Stem FL2.0 31.8mm
250576	SYN Grips Comfort, Lock-On
272451	SCO Twinloc lever down clamp 19
262070	SCO Seatpost-Remote syncros 2.0
223309	SCO Seatclamp 34.9mm CrMo bolt
278396	SCO Seatpost-Serv Air cartkit Duncan 2.5
278398	SCO Seatpost-Serv.seal kit Duncan 2.5
277032	SCO Axle RWS rear 148x12 boost plug T30
242437	SCO Hub-rep kit Syncros Formula CL811
242439	SCO Hub-rep kit Syncros Formula CL148S
266609	SCO Rim SY/Alex MD30 32H 18
266602	SCO E-bike Chainguide Genius 18
277346	BGM Crankset FSA CK320 GEN4 20
278358	SCO eRIDE Bat mount up Gen/Str/Ax-E 20
278368	SCO eRIDE Bat cover Gen/Str/Ax-E 20
278371	SCO eRIDE Motor cov Gen/Str/Ax-E 20
278375	SCO eRIDE Charge port BO 20
266595	SCO E-bike Comp magnet Spark/Genius 18

STRIKE eRDIE 940



ITEM	DESCRIPTION
282461	SCO Chainstays Strike eRIDE 940 21
282488	SCO Seatstays Strike eRIDE 940 21
254092	SCO Dropout hanger boost TA12 alloy 17
278365	SCO eRIDE Cableguide set Gen/Str/Ax-E 20
266600	SCO E-bike Shock cableguide Sp/Gen 18
278364	SCO eRIDE D/T fork bump Gen/Str/Axis-E20
276484	SCO E-bike CS prote Gen/Strike/Axis-E 20
282755	SCO eRIDE linkage Strike 21
274487	SCO Screw set Up pivots Trunnion version
271273	SCO E-bike Swingarm rep kit all 19
266575	SCO Shock mount hardware Gen18 Ran19
266576	SCO Shock mount bush set X-Fus Gen18 Ran
279125	SCO Rear shock 185x50mm X-Fusion 20 Wty
279749	SCO eRIDE Headset Strike alloy 20
262082	SCO Headset spacers+cap Syncros 1.5 MTB
250566	SYN Stem FL2.0 31.8mm
250576	SYN Grips Comfort, Lock-On
272451	SCO Twinloc lever down clamp 19
262070	SCO Seatpost-Remote syncros 2.0
223309	SCO Seatclamp 34.9mm CrMo bolt
278396	SCO Seatpost-Serv Air cartkit Duncan 2.5
278398	SCO Seatpost-Serv.seal kit Duncan 2.5
277032	SCO Axle RWS rear 148x12 boost plug T30
242437	SCO Hub-rep kit Syncros Formula CL811
242439	SCO Hub-rep kit Syncros Formula CL148S
266609	SCO Rim SY/Alex MD30 32H 18
266602	SCO E-bike Chainguide Genius 18
277346	BGM Crankset FSA CK320 GEN4 20
278358	SCO eRIDE Bat mount up Gen/Str/Ax-E 20
278368	SCO eRIDE Bat cover Gen/Str/Ax-E 20
278371	SCO eRIDE Motor cov Gen/Str/Ax-E 20
278375	SCO eRIDE Charge port BO 20
266595	SCO E-bike Comp magnet Spark/Genius 18

CONTESSA STRIKE eRIDE 910



ITEM	DESCRIPTION
254092	SCO Dropout hanger boost TA12 alloy 17
278365	SCO eRIDE Cableguide set Gen/Str/Ax-E 20
266600	SCO E-bike Shock cableguide Sp/Gen 18
278364	SCO eRIDE D/T fork bump Gen/Str/Axis-E20
276484	SCO E-bike CS prote Gen/Strike/Axis-E 20
282755	SCO eRIDE linkage Strike 21
274487	SCO Screw set Up pivots Trunnion version
271273	SCO E-bike Swingarm rep kit all 19
266575	SCO Shock mount hardware Gen18 Ran19
266577	SCO Shock mount bush set Fox Gen18 Ran19
279749	SCO eRIDE Headset Strike alloy 20
262082	SCO Headset spacers+cap Syncros 1.5 MTB
250566	SYN Stem FL2.0 31.8mm
250579	SYN Grips Women Comfort, Lock-On
272451	SCO Twinloc lever down clamp 19
223309	SCO Seatclamp 34.9mm CrMo bolt
278396	SCO Seatpost-Serv Air cartkit Duncan 2.5
278398	SCO Seatpost-Serv.seal kit Duncan 2.5
270223	SYN Saddle Savona V 2.0, Channel
277032	SCO Axle RWS rear 148x12 boost plug T30
266609	SCO Rim SY/Alex MD30 32H 18
266602	SCO E-bike Chainguide Genius 18
278389	SCO eRIDE crank arms FSA745 Gen4 20 Wty
278358	SCO eRIDE Bat mount up Gen/Str/Ax-E 20
278368	SCO eRIDE Bat cover Gen/Str/Ax-E 20
278371	SCO eRIDE Motor cov Gen/Str/Ax-E 20
278375	SCO eRIDE Charge port BO 20
266595	SCO E-bike Comp magnet Spark/Genius 18

CONTESSA STRIKE eRIDE 920



ITEM	DESCRIPTION
254092	SCO Dropout hanger boost TA12 alloy 17
278365	SCO eRIDE Cableguide set Gen/Str/Ax-E 20
266600	SCO E-bike Shock cableguide Sp/Gen 18
278364	SCO eRIDE D/T fork bump Gen/Str/Axis-E20
276484	SCO E-bike CS prote Gen/Strike/Axis-E 20
282755	SCO eRIDE linkage Strike 21
274487	SCO Screw set Up pivots Trunnion version
271273	SCO E-bike Swingarm rep kit all 19
266575	SCO Shock mount hardware Gen18 Ran19
266576	SCO Shock mount bush set X-Fus Gen18 Ran
279125	SCO Rear shock 185x50mm X-Fusion 20 Wty
279749	SCO eRIDE Headset Strike alloy 20
262082	SCO Headset spacers+cap Syncros 1.5 MTB
250566	SYN Stem FL2.0 31.8mm
250579	SYN Grips Women Comfort, Lock-On
272451	SCO Twinloc lever down clamp 19
223309	SCO Seatclamp 34.9mm CrMo bolt
278396	SCO Seatpost-Serv Air cartkit Duncan 2.5
278398	SCO Seatpost-Serv.seal kit Duncan 2.5
277032	SCO Axle RWS rear 148x12 boost plug T30
242437	SCO Hub-rep kit Syncros Formula CL811
242439	SCO Hub-rep kit Syncros Formula CL148S
266609	SCO Rim SY/Alex MD30 32H 18
266602	SCO E-bike Chainguide Genius 18
277346	BGM Crankset FSA CK320 GEN4 20
278358	SCO eRIDE Bat mount up Gen/Str/Ax-E 20
278368	SCO eRIDE Bat cover Gen/Str/Ax-E 20
278371	SCO eRIDE Motor cov Gen/Str/Ax-E 20
278375	SCO eRIDE Charge port BO 20
266595	SCO E-bike Comp magnet Spark/Genius 18

GENIUS eRIDE &
CONTESSA GENIUS eRIDE



GENIUS ERIDE 900 TUNED



ITEM	DESCRIPTION
282451	SCO Chainstays Genius eRIDE TND 21
282478	SCO Seatstays Genius eRIDE TND 21
254092	SCO Dropout hanger boost TA12 alloy 17
278367	SCO eRIDE Cableguide set Genius CB 20
266600	SCO E-bike Shock cableguide Sp/Gen 18
278364	SCO eRIDE D/T fork bump Gen/Str/Axis-E20
276484	SCO E-bike CS prote Gen/Strike/Axis-E 20
282754	SCO eRIDE linkage Genius 21
274487	SCO Screw set Up pivots Trunnion version
271273	SCO E-bike Swingarm rep kit all 19
266575	SCO Shock mount hardware Gen18 Ran19
266577	SCO Shock mount bush set Fox Gen18 Ran19
272446	SCO Rear shock Genius Fox TR KSH 19
279747	SCO eRIDE Headset forkstop Genius 20
262082	SCO Headset spacers+cap Syncros 1.5 MTB
275473	SCO Stem Hardware Kit Hixon iC
270195	SYN Bar/Stem Hixon iC SL 780mm
250574	SYN Grips Pro, Lock-On
272451	SCO Twinloc lever down clamp 19
223309	SCO Seatclamp 34.9mm CrMo bolt
270203	SYN Saddle Tofino R 1.0, Channel
277032	SCO Axle RWS rear 148x12 boost plug T30
266784	SCO Hub rep kit SY/Form XR2.5-TR-all F18
252402	SCO Hub-rep kit Form TC-14811 / 12x148mm
266810	SCO Spoke SY/Form rep kit XR2.0 18
279072	SCO eRIDE Rim Revelstoke-E 1.5 20 Wty
266602	SCO E-bike Chainguide Genius 18
278358	SCO eRIDE Bat mount up Gen/Str/Ax-E 20
278359	SCO eRIDE Range booster plugs Gen/Asp 20
281308	SCO eRIDE Bat cover Gen/strike carbon 20
285818	SCO eRIDE Motor cov Gen/strike carbon 21
278375	SCO eRIDE Charge port BO 20
266595	SCO E-bike Comp magnet Spark/Genius 18

GENIUS ERIDE 900



ITEM	DESCRIPTION
282452	SCO Chainstays Genius eRIDE 900 21
282479	SCO Seatstays Genius eRIDE 900 21
254092	SCO Dropout hanger boost TA12 alloy 17
278367	SCO eRIDE Cableguide set Genius CB 20
266600	SCO E-bike Shock cableguide Sp/Gen 18
278364	SCO eRIDE D/T fork bump Gen/Str/Axis-E20
276484	SCO E-bike CS prote Gen/Strike/Axis-E 20
282754	SCO eRIDE linkage Genius 21
274487	SCO Screw set Up pivots Trunnion version
271273	SCO E-bike Swingarm rep kit all 19
266575	SCO Shock mount hardware Gen18 Ran19
266577	SCO Shock mount bush set Fox Gen18 Ran19
272448	SCO Rear shock Genius Fox T 19
279747	SCO eRIDE Headset forkstop Genius 20
262082	SCO Headset spacers+cap Syncros 1.5 MTB
250566	SYN Stem FL2.0 31.8mm
250574	SYN Grips Pro, Lock-On
272451	SCO Twinloc lever down clamp 19
262070	SCO Seatpost-Remote syncros 2.0
223309	SCO Seatclamp 34.9mm CrMo bolt
278396	SCO Seatpost-Serv Air cartkit Duncan 2.5
278398	SCO Seatpost-Serv.seal kit Duncan 2.5
277032	SCO Axle RWS rear 148x12 boost plug T30
242437	SCO Hub-rep kit Syncros Formula CL811
242439	SCO Hub-rep kit Syncros Formula CL148S
266609	SCO Rim SY/Alex MD30 32H 18
266602	SCO E-bike Chainguide Genius 18
278389	SCO eRIDE crank arms FSA745 Gen4 20 Wty
278358	SCO eRIDE Bat mount up Gen/Str/Ax-E 20
278359	SCO eRIDE Range booster plugs Gen/Asp 20
281308	SCO eRIDE Bat cover Gen/strike carbon 20
285818	SCO eRIDE Motor cov Gen/strike carbon 21
278375	SCO eRIDE Charge port BO 20
266595	SCO E-bike Comp magnet Spark/Genius 18

GENIUS ERIDE 910



ITEM	DESCRIPTION
282453	SCO Chainstays Genius eRIDE 910 21
282480	SCO Seatstays Genius eRIDE 910 21
254092	SCO Dropout hanger boost TA12 alloy 17
278365	SCO eRIDE Cableguide set Gen/Str/Ax-E 20
266600	SCO E-bike Shock cableguide Sp/Gen 18
278364	SCO eRIDE D/T fork bump Gen/Str/Axis-E20
276484	SCO E-bike CS prote Gen/Strike/Axis-E 20
282754	SCO eRIDE linkage Genius 21
274487	SCO Screw set Up pivots Trunnion version
271273	SCO E-bike Swingarm rep kit all 19
266575	SCO Shock mount hardware Gen18 Ran19
266577	SCO Shock mount bush set Fox Gen18 Ran19
272448	SCO Rear shock Genius Fox T 19
279747	SCO eRIDE Headset forkstop Genius 20
262082	SCO Headset spacers+cap Syncros 1.5 MTB
250565	SYN Stem FL1.5, 31.8mm
270197	SYN H.bar Hixon1.5 Rise, 20mm Rise
250574	SYN Grips Pro, Lock-On
272451	SCO Twinloc lever down clamp 19
223309	SCO Seatclamp 34.9mm CrMo bolt
277032	SCO Axle RWS rear 148x12 boost plug T30
242437	SCO Hub-rep kit Syncros Formula CL811
271258	SCO Hub-rep kit Form ECT-148S R 19
266608	SCO Rim SY/X-30s D 32H 18
266602	SCO E-bike Chainguide Genius 18
278358	SCO eRIDE Bat mount up Gen/Str/Ax-E 20
278359	SCO eRIDE Range booster plugs Gen/Asp 20
278368	SCO eRIDE Bat cover Gen/Str/Ax-E 20
278371	SCO eRIDE Motor cov Gen/Str/Ax-E 20
278375	SCO eRIDE Charge port BO 20
265596	SYN Trail fender
266595	SCO E-bike Comp magnet Spark/Genius 18

GENIUS ERIDE 920



ITEM	DESCRIPTION
282454	SCO Chainstays Genius eRIDE 920 21
282481	SCO Seatstays Genius eRIDE 920 21
254092	SCO Dropout hanger boost TA12 alloy 17
278365	SCO eRIDE Cableguide set Gen/Str/Ax-E 20
266600	SCO E-bike Shock cableguide Sp/Gen 18
278364	SCO eRIDE D/T fork bump Gen/Str/Axis-E20
276484	SCO E-bike CS prote Gen/Strike/Axis-E 20
282754	SCO eRIDE linkage Genius 21
274487	SCO Screw set Up pivots Trunnion version
271273	SCO E-bike Swingarm rep kit all 19
266575	SCO Shock mount hardware Gen18 Ran19
266577	SCO Shock mount bush set Fox Gen18 Ran19
279747	SCO eRIDE Headset forkstop Genius 20
262082	SCO Headset spacers+cap Syncros 1.5 MTB
250566	SYN Stem FL2.0 31.8mm
250574	SYN Grips Pro, Lock-On
272451	SCO Twinloc lever down clamp 19
262070	SCO Seatpost-Remote syncros 2.0
223309	SCO Seatclamp 34.9mm CrMo bolt
278396	SCO Seatpost-Serv Air cartkit Duncan 2.5
278398	SCO Seatpost-Serv.seal kit Duncan 2.5
277032	SCO Axle RWS rear 148x12 boost plug T30
266609	SCO Rim SY/Alex MD30 32H 18
266602	SCO E-bike Chainguide Genius 18
278389	SCO eRIDE crank arms FSA745 Gen4 20 Wty
278358	SCO eRIDE Bat mount up Gen/Str/Ax-E 20
278359	SCO eRIDE Range booster plugs Gen/Asp 20
278368	SCO eRIDE Bat cover Gen/Str/Ax-E 20
278371	SCO eRIDE Motor cov Gen/Str/Ax-E 20
278375	SCO eRIDE Charge port BO 20
265596	SYN Trail fender
266595	SCO E-bike Comp magnet Spark/Genius 18

GENIUS ERIDE 930



ITEM	DESCRIPTION
282455	SCO Chainstays Genius eRIDE 930 21
282482	SCO Seatstays Genius eRIDE 930 21
254092	SCO Dropout hanger boost TA12 alloy 17
278365	SCO eRIDE Cableguide set Gen/Str/Ax-E 20
266600	SCO E-bike Shock cableguide Sp/Gen 18
278364	SCO eRIDE D/T fork bump Gen/Str/Axis-E20
276484	SCO E-bike CS prote Gen/Strike/Axis-E 20
282754	SCO eRIDE linkage Genius 21
274487	SCO Screw set Up pivots Trunnion version
271273	SCO E-bike Swingarm rep kit all 19
266575	SCO Shock mount hardware Gen18 Ran19
266576	SCO Shock mount bush set X-Fus Gen18 Ran
279747	SCO eRIDE Headset forkstop Genius 20
262082	SCO Headset spacers+cap Syncros 1.5 MTB
250566	SYN Stem FL2.0 31.8mm
250574	SYN Grips Pro, Lock-On
272451	SCO Twinloc lever down clamp 19
262070	SCO Seatpost-Remote syncros 2.0
223309	SCO Seatclamp 34.9mm CrMo bolt
278396	SCO Seatpost-Serv Air cartkit Duncan 2.5
278398	SCO Seatpost-Serv.seal kit Duncan 2.5
277032	SCO Axle RWS rear 148x12 boost plug T30
242437	SCO Hub-rep kit Syncros Formula CL811
242439	SCO Hub-rep kit Syncros Formula CL148S
266609	SCO Rim SY/Alex MD30 32H 18
266602	SCO E-bike Chainguide Genius 18
278389	SCO eRIDE crank arms FSA745 Gen4 20 Wty
278358	SCO eRIDE Bat mount up Gen/Str/Ax-E 20
278359	SCO eRIDE Range booster plugs Gen/Asp 20
278368	SCO eRIDE Bat cover Gen/Str/Ax-E 20
278371	SCO eRIDE Motor cov Gen/Str/Ax-E 20
278375	SCO eRIDE Charge port BO 20
266595	SCO E-bike Comp magnet Spark/Genius 18

CONT.GENIUS ERIDE 910



ITEM	DESCRIPTION
254092	SCO Dropout hanger boost TA12 alloy 17
278365	SCO eRIDE Cableguide set Gen/Str/Ax-E 20
266600	SCO E-bike Shock cableguide Sp/Gen 18
278364	SCO eRIDE D/T fork bump Gen/Str/Axis-E20
276484	SCO E-bike CS prote Gen/Strike/Axis-E 20
272453	SCO Linkage bar Genius Alloy 19/20
274487	SCO Screw set Up pivots Trunnion version
271273	SCO E-bike Swingarm rep kit all 19
266575	SCO Shock mount hardware Gen18 Ran19
266577	SCO Shock mount bush set Fox Gen18 Ran19
265586	SYN Headset ZS44/28.6 - ZS56/40
262082	SCO Headset spacers+cap Syncros 1.5 MTB
250566	SYN Stem FL2.0 31.8mm
250579	SYN Grips Women Comfort, Lock-On
272451	SCO Twinloc lever down clamp 19
223309	SCO Seatclamp 34.9mm CrMo bolt
278396	SCO Seatpost-Serv Air cartkit Duncan 2.5
278398	SCO Seatpost-Serv.seal kit Duncan 2.5
277032	SCO Axle RWS rear 148x12 boost plug T30
266609	SCO Rim SY/Alex MD30 32H 18
266602	SCO E-bike Chainguide Genius 18
278389	SCO eRIDE crank arms FSA745 Gen4 20 Wty
278358	SCO eRIDE Bat mount up Gen/Str/Ax-E 20
278359	SCO eRIDE Range booster plugs Gen/Asp 20
278368	SCO eRIDE Bat cover Gen/Str/Ax-E 20
278371	SCO eRIDE Motor cov Gen/Str/Ax-E 20
278375	SCO eRIDE Charge port BO 20
265596	SYN Trail fender
266595	SCO E-bike Comp magnet Spark/Genius 18

ASPECT eRIDE &
CONTESSA ACTIVE eRIDE



ASPECT eRIDE 910



ITEM	DESCRIPTION
254092	SCO Dropout hanger boost TA12 alloy 17
266587	SCO Cableguide set Sca/Spa/Gen H-tube 18
273036	SCO E-bike chainstay protector Aspect 19
265586	SYN Headset ZS44/28.6 - ZS56/40
250566	SYN Stem FL2.0, 31.8mm
250576	SYN Grips Comfort, Lock-On
229733	SCO Seatclamp 34.9mm QR Gambler
242572	SCO Seatpost Syncros 31.6 warranty
277033	SCO Axle RWS rear 148x12 boost plug T25
242437	SCO Hub-rep kit Syncros Formula CL811
242439	SCO Hub-rep kit Syncros Formula CL148S
266609	SCO Rim SY/Alex MD30 32H 18
278389	SCO eRIDE crank arms FSA745 Gen4 20 Wty
278361	SCO eRIDE Bat mount Asp/Ax/Sub 20
278359	SCO eRIDE Range booster plugs Gen/Asp 20
278369	SCO eRIDE Bat cover Asp/Ax/Sub 20
278374	SCO eRIDE Motor cov Asp/Ax/Sub Gen4 20
278375	SCO eRIDE Charge port BO 20
266595	SCO E-bike Comp magnet Spark/Genius 18

ASPECT eRIDE 920



ITEM	DESCRIPTION
254092	SCO Dropout hanger boost TA12 alloy 17
266587	SCO Cableguide set Sca/Spa/Gen H-tube 18
273036	SCO E-bike chainstay protector Aspect 19
265586	SYN Headset ZS44/28.6 - ZS56/40
250576	SYN Grips Comfort, Lock-On
229733	SCO Seatclamp 34.9mm QR Gambler
242572	SCO Seatpost Syncros 31.6 warranty
277033	SCO Axle RWS rear 148x12 boost plug T25
242437	SCO Hub-rep kit Syncros Formula CL811
242439	SCO Hub-rep kit Syncros Formula CL148S
266609	SCO Rim SY/Alex MD30 32H 18
278361	SCO eRIDE Bat mount Asp/Ax/Sub 20
278359	SCO eRIDE Range booster plugs Gen/Asp 20
278369	SCO eRIDE Bat cover Asp/Ax/Sub 20
278374	SCO eRIDE Motor cov Asp/Ax/Sub Gen4 20
278375	SCO eRIDE Charge port BO 20
266595	SCO E-bike Comp magnet Spark/Genius 18

ASPECT eRIDE 930



ITEM	DESCRIPTION
254092	SCO Dropout hanger boost TA12 alloy 17
266587	SCO Cableguide set Sca/Spa/Gen H-tube 18
273036	SCO E-bike chainstay protector Aspect 19
265586	SYN Headset ZS44/28.6 - ZS56/40
250576	SYN Grips Comfort, Lock-On
229733	SCO Seatclamp 34.9mm QR Gambler
242572	SCO Seatpost Syncros 31.6 warranty
277033	SCO Axle RWS rear 148x12 boost plug T25
272169	BGM Crankset FSA CK-200 19
278361	SCO eRIDE Bat mount Asp/Ax/Sub 20
278359	SCO eRIDE Range booster plugs Gen/Asp 20
278369	SCO eRIDE Bat cover Asp/Ax/Sub 20
278373	SCO eRIDE Motor cov Asp/Ax/Sub Gen3 20
278375	SCO eRIDE Charge port BO 20
266595	SCO E-bike Comp magnet Spark/Genius 18

ASPECT eRIDE 940



ITEM	DESCRIPTION
254092	SCO Dropout hanger boost TA12 alloy 17
266587	SCO Cableguide set Sca/Spa/Gen H-tube 18
273036	SCO E-bike chainstay protector Aspect 19
265586	SYN Headset ZS44/28.6 - ZS56/40
250576	SYN Grips Comfort, Lock-On
229733	SCO Seatclamp 34.9mm QR Gambler
242572	SCO Seatpost Syncros 31.6 warranty
277033	SCO Axle RWS rear 148x12 boost plug T25
272169	BGM Crankset FSA CK-200 19
278361	SCO eRIDE Bat mount Asp/Ax/Sub 20
278359	SCO eRIDE Range booster plugs Gen/Asp 20
278369	SCO eRIDE Bat cover Asp/Ax/Sub 20
278373	SCO eRIDE Motor cov Asp/Ax/Sub Gen3 20
278375	SCO eRIDE Charge port BO 20
266595	SCO E-bike Comp magnet Spark/Genius 18

ASPECT eRIDE 950



ITEM	DESCRIPTION
254092	SCO Dropout hanger boost TA12 alloy 17
266587	SCO Cableguide set Sca/Spa/Gen H-tube 18
273036	SCO E-bike chainstay protector Aspect 19
265586	SYN Headset ZS44/28.6 - ZS56/40
250576	SYN Grips Comfort, Lock-On
229733	SCO Seatclamp 34.9mm QR Gambler
242572	SCO Seatpost Syncros 31.6 warranty
277033	SCO Axle RWS rear 148x12 boost plug T25
272169	BGM Crankset FSA CK-200 19
278361	SCO eRIDE Bat mount Asp/Ax/Sub 20
278359	SCO eRIDE Range booster plugs Gen/Asp 20
278369	SCO eRIDE Bat cover Asp/Ax/Sub 20
278373	SCO eRIDE Motor cov Asp/Ax/Sub Gen3 20
278375	SCO eRIDE Charge port BO 20
266595	SCO E-bike Comp magnet Spark/Genius 18

CONT.ACTIVE eRIDE 910



ITEM	DESCRIPTION
254092	SCO Dropout hanger boost TA12 alloy 17
266587	SCO Cableguide set Sca/Spa/Gen H-tube 18
273036	SCO E-bike chainstay protector Aspect 19
265586	SYN Headset ZS44/28.6 - ZS56/40
250566	SYN Stem FL2.0, 31.8mm
250579	SYN Grips Women Comfort, Lock-On
229733	SCO Seatclamp 34.9mm QR Gambler
242572	SCO Seatpost Syncros 31.6 warranty
270223	SYN Saddle Savona V 2.0, Channel
277033	SCO Axle RWS rear 148x12 boost plug T25
242437	SCO Hub-rep kit Syncros Formula CL811
242439	SCO Hub-rep kit Syncros Formula CL148S
266609	SCO Rim SY/Alex MD30 32H 18
278389	SCO eRIDE crank arms FSA745 Gen4 20 Wty
278361	SCO eRIDE Bat mount Asp/Ax/Sub 20
278359	SCO eRIDE Range booster plugs Gen/Asp 20
278369	SCO eRIDE Bat cover Asp/Ax/Sub 20
278374	SCO eRIDE Motor cov Asp/Ax/Sub Gen4 20
278375	SCO eRIDE Charge port BO 20
266595	SCO E-bike Comp magnet Spark/Genius 18

CONT.ACTIVE eRIDE 920



ITEM	DESCRIPTION
254092	SCO Dropout hanger boost TA12 alloy 17
266587	SCO Cableguide set Sca/Spa/Gen H-tube 18
273036	SCO E-bike chainstay protector Aspect 19
265586	SYN Headset ZS44/28.6 - ZS56/40
250579	SYN Grips Women Comfort, Lock-On
229733	SCO Seatclamp 34.9mm QR Gambler
242572	SCO Seatpost Syncros 31.6 warranty
277033	SCO Axle RWS rear 148x12 boost plug T25
242437	SCO Hub-rep kit Syncros Formula CL811
242439	SCO Hub-rep kit Syncros Formula CL148S
266609	SCO Rim SY/Alex MD30 32H 18
278361	SCO eRIDE Bat mount Asp/Ax/Sub 20
278359	SCO eRIDE Range booster plugs Gen/Asp 20
278369	SCO eRIDE Bat cover Asp/Ax/Sub 20
278374	SCO eRIDE Motor cov Asp/Ax/Sub Gen4 20
278375	SCO eRIDE Charge port BO 20
266595	SCO E-bike Comp magnet Spark/Genius 18

CONT.ACTIVE eRIDE 930



ITEM	DESCRIPTION
254092	SCO Dropout hanger boost TA12 alloy 17
266587	SCO Cableguide set Sca/Spa/Gen H-tube 18
273036	SCO E-bike chainstay protector Aspect 19
265586	SYN Headset ZS44/28.6 - ZS56/40
250579	SYN Grips Women Comfort, Lock-On
229733	SCO Seatclamp 34.9mm QR Gambler
242572	SCO Seatpost Syncros 31.6 warranty
277033	SCO Axle RWS rear 148x12 boost plug T25
272169	BGM Crankset FSA CK-200 19
278361	SCO eRIDE Bat mount Asp/Ax/Sub 20
278359	SCO eRIDE Range booster plugs Gen/Asp 20
278369	SCO eRIDE Bat cover Asp/Ax/Sub 20
278373	SCO eRIDE Motor cov Asp/Ax/Sub Gen3 20
278375	SCO eRIDE Charge port BO 20
266595	SCO E-bike Comp magnet Spark/Genius 18

URBAN & TREKKING eRIDE



AXIS eRIDE EVO SPEED45km/h



ITEM	DESCRIPTION
282462	SCO Chainstays Axis eRIDE Evo 45KM 21
282489	SCO Seatstays Axis eRIDE Evo 45Km 21
276484	SCO E-bike CS prote Gen/Strike/Axis-E 20
254092	SCO Dropout hanger boost TA12 alloy 17
278365	SCO eRIDE Cableguide set Gen/Str/Ax-E 20
266600	SCO E-bike Shock cableguide Sp/Gen 18
278364	SCO eRIDE D/T fork bump Gen/Str/Axis-E20
282755	SCO eRIDE linkage Strike 21
274487	SCO Screw set Up pivots Trunnion version
271273	SCO E-bike Swingarm rep kit all 19
266575	SCO Shock mount hardware Gen18 Ran19
266576	SCO Shock mount bush set X-Fus Gen18 Ran
279125	SCO Rear shock 185x50mm X-Fusion 20 Wty
279749	SCO eRIDE Headset Strike alloy 20
272473	SCO E-bike stem plate FL light mount
271275	SCO E-bike H.bar Axis eRide Evo 19
250576	SYN Grips Comfort, Lock-On
239171	SCO Twinloc lever Nude 3 integ clamp
229733	SCO Seatclamp 34.9mm QR Gambler
277032	SCO Axle RWS rear 148x12 boost plug T30
266786	SCO Hub rep kit SY/Form XR2.0 F 6blt 18
282723	SCO Hub rep kit EMSL-148S R M/S 21
278378	SCO eRIDE Rim Axis 20 Wty
278389	SCO eRIDE crank arms FSA745 Gen4 20 Wty
278358	SCO eRIDE Bat mount up Gen/Str/Ax-E 20
278368	SCO eRIDE Bat cover Gen/Str/Ax-E 20
278371	SCO eRIDE Motor cov Gen/Str/Ax-E 20
278375	SCO eRIDE Charge port BO 20
275505	SCO Rear rack AXIS E-Ride Evo
265597	SYN Kickstand Fully E-MTB 2 bolts
266595	SCO E-bike Comp magnet Spark/Genius 18

AXIS eRIDE EVO



ITEM	DESCRIPTION
282462	SCO Chainstays Axis eRIDE Evo 45KM 21
282489	SCO Seatstays Axis eRIDE Evo 45Km 21
276484	SCO E-bike CS prote Gen/Strike/Axis-E 20
254092	SCO Dropout hanger boost TA12 alloy 17
278365	SCO eRIDE Cableguide set Gen/Str/Ax-E 20
266600	SCO E-bike Shock cableguide Sp/Gen 18
278364	SCO eRIDE D/T fork bump Gen/Str/Axis-E20
282755	SCO eRIDE linkage Strike 21
274487	SCO Screw set Up pivots Trunnion version
271273	SCO E-bike Swingarm rep kit all 19
266575	SCO Shock mount hardware Gen18 Ran19
266576	SCO Shock mount bush set X-Fus Gen18 Ran
279125	SCO Rear shock 185x50mm X-Fusion 20 Wty
279749	SCO eRIDE Headset Strike alloy 20
272473	SCO E-bike stem plate FL light mount
271275	SCO E-bike H.bar Axis eRide Evo 19
250576	SYN Grips Comfort, Lock-On
239171	SCO Twinloc lever Nude 3 integ clamp
229733	SCO Seatclamp 34.9mm QR Gambler
277032	SCO Axle RWS rear 148x12 boost plug T30
266786	SCO Hub rep kit SY/Form XR2.0 F 6blt 18
282354	SCO Hub rep kit Form SCT-2012 M/S R 20
278378	SCO eRIDE Rim Axis 20 Wty
278389	SCO eRIDE crank arms FSA745 Gen4 20 Wty
266602	SCO E-bike Chainguide Genius 18
278358	SCO eRIDE Bat mount up Gen/Str/Ax-E 20
278368	SCO eRIDE Bat cover Gen/Str/Ax-E 20
278371	SCO eRIDE Motor cov Gen/Str/Ax-E 20
278375	SCO eRIDE Charge port BO 20
275505	SCO Rear rack AXIS E-Ride Evo
265597	SYN Kickstand Fully E-MTB 2 bolts
266595	SCO E-bike Comp magnet Spark/Genius 18

AXIS eRIDE 10 MEN



ITEM	DESCRIPTION
271278	SCO E-bike fork Suntour boost 19
254092	SCO Dropout hanger boost TA12 alloy 17
266587	SCO Cableguide set Sca/Spa/Gen H-tube 18
282748	SCO eRIDE Chainstay protector Axis -E 21
228441	SYN Headset ZS44/28.6 - ZS55/40
272473	SCO E-bike stem plate FL light mount
271274	SCO E-bike H.bar Axis eRide Men/Lady 19
250576	SYN Grips Comfort, Lock-On
239171	SCO Twinloc lever Nude 3 integ clamp
229733	SCO Seatclamp 34.9mm QR Gambler
277033	SCO Axle RWS rear 148x12 boost plug T25
278361	SCO eRIDE Bat mount Asp/Ax/Sub 20
278369	SCO eRIDE Bat cover Asp/Ax/Sub 20
278374	SCO eRIDE Motor cov Asp/Ax/Sub Gen4 20
278375	SCO eRIDE Charge port BO 20
285498	SCO eRIDE Fender Axis 10/20 21 Wty
275504	SCO Rear rack AXIS E-Ride/Sub-Cross
250604	SYN Kickstand 2 bolts Direct Mount
252412	SCO E-bike Light front E-Silence 17
266595	SCO E-bike Comp magnet Spark/Genius 18

AXIS eRIDE 10 LADY



ITEM	DESCRIPTION
271278	SCO E-bike fork Suntour boost 19
254092	SCO Dropout hanger boost TA12 alloy 17
266587	SCO Cableguide set Sca/Spa/Gen H-tube 18
282748	SCO eRIDE Chainstay protector Axis -E 21
228441	SYN Headset ZS44/28.6 - ZS55/40
272473	SCO E-bike stem plate FL light mount
271274	SCO E-bike H.bar Axis eRide Men/Lady 19
250576	SYN Grips Comfort, Lock-On
239171	SCO Twinloc lever Nude 3 integ clamp
229733	SCO Seatclamp 34.9mm QR Gambler
277033	SCO Axle RWS rear 148x12 boost plug T25
278361	SCO eRIDE Bat mount Asp/Ax/Sub 20
278369	SCO eRIDE Bat cover Asp/Ax/Sub 20
278374	SCO eRIDE Motor cov Asp/Ax/Sub Gen4 20
278375	SCO eRIDE Charge port BO 20
285498	SCO eRIDE Fender Axis 10/20 21 Wty
275504	SCO Rear rack AXIS E-Ride/Sub-Cross
250604	SYN Kickstand 2 bolts Direct Mount
252412	SCO E-bike Light front E-Silence 17
266595	SCO E-bike Comp magnet Spark/Genius 18

AXIS eRIDE 20 MEN



ITEM	DESCRIPTION
271278	SCO E-bike fork Suntour boost 19
254092	SCO Dropout hanger boost TA12 alloy 17
266587	SCO Cableguide set Sca/Spa/Gen H-tube 18
282748	SCO eRIDE Chainstay protector Axis -E 21
228441	SYN Headset ZS44/28.6 - ZS55/40
272482	SCO E-bike Stem Silence 60mm 19
272472	SCO E-bike stem plate Axis 10/Silence 19
271274	SCO E-bike H.bar Axis eRide Men/Lady 19
250576	SYN Grips Comfort, Lock-On
239171	SCO Twinloc lever Nude 3 integ clamp
229733	SCO Seatclamp 34.9mm QR Gambler
277033	SCO Axle RWS rear 148x12 boost plug T25
278361	SCO eRIDE Bat mount Asp/Ax/Sub 20
278369	SCO eRIDE Bat cover Asp/Ax/Sub 20
278373	SCO eRIDE Motor cov Asp/Ax/Sub Gen3 20
278375	SCO eRIDE Charge port BO 20
285498	SCO eRIDE Fender Axis 10/20 21 Wty
275504	SCO Rear rack AXIS E-Ride/Sub-Cross
250604	SYN Kickstand 2 bolts Direct Mount
252412	SCO E-bike Light front E-Silence 17
266595	SCO E-bike Comp magnet Spark/Genius 18

AXIS eRIDE 20 LADY



ITEM	DESCRIPTION
271278	SCO E-bike fork Suntour boost 19
254092	SCO Dropout hanger boost TA12 alloy 17
266587	SCO Cableguide set Sca/Spa/Gen H-tube 18
282748	SCO eRIDE Chainstay protector Axis -E 21
228441	SYN Headset ZS44/28.6 - ZS55/40
272482	SCO E-bike Stem Silence 60mm 19
272472	SCO E-bike stem plate Axis 10/Silence 19
271274	SCO E-bike H.bar Axis eRide Men/Lady 19
250576	SYN Grips Comfort, Lock-On
239171	SCO Twinloc lever Nude 3 integ clamp
229733	SCO Seatclamp 34.9mm QR Gambler
277033	SCO Axle RWS rear 148x12 boost plug T25
278361	SCO eRIDE Bat mount Asp/Ax/Sub 20
278369	SCO eRIDE Bat cover Asp/Ax/Sub 20
278373	SCO eRIDE Motor cov Asp/Ax/Sub Gen3 20
278375	SCO eRIDE Charge port BO 20
285498	SCO eRIDE Fender Axis 10/20 21 Wty
275504	SCO Rear rack AXIS E-Ride/Sub-Cross
250604	SYN Kickstand 2 bolts Direct Mount
252412	SCO E-bike Light front E-Silence 17
266595	SCO E-bike Comp magnet Spark/Genius 18

Sub eRIDE:

The Sub Series stays the same as previous year except the USX models.
MY21 Sub eRIDE USX shares the same frame as the new Bergamont E-Wave.

Drive unit/Cover:

The Frame is only designed for Bosch Gen 3 Drive units but Spec´d with Gen 4 on some models.
Gen 4 models have a special adapter plate for the Drive unit to make it fit the frame.

285403 - BGM DU Flange Adapter GEN4 E-Wave 21

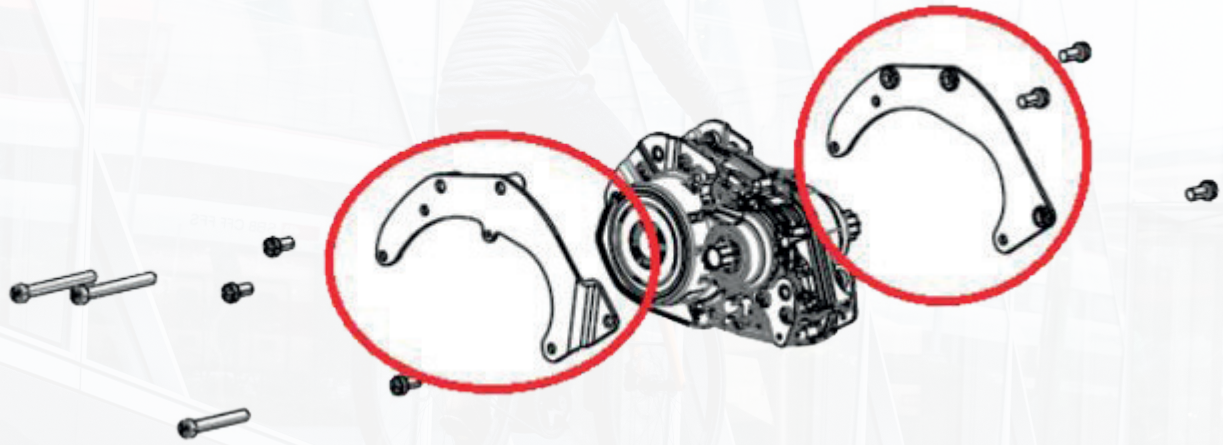

The Drive unit cover is still different depending of what generation Drive unit is assembled.
⚠**Only the Performance CX is Gen 4**

285395 - BGM Enginecover E-Wave Gen3 21
285396 - BGM Enginecover E-Wave Gen4 21

Vertical Battery/Cover:

Unlike all other Scott bikes, the Sub eRIDE USX comes with the Vertical PowerTube battery instead of the Horizontal.
Like previous years it is possible to fit the 500w battery in the frame with an adapter.

285399 - BGM DT Converter vertical PT500/PT60

285397 - BGM Batterycover PT625 E-Wave 21
277358 - BGM PT600 Cover Screw 20



Dropout:

The rear dropout consists of 2 different parts, one for the drive side and one for the non-drive side.

285374 - BGM Dropout BGM-H051A (Drive side)
285375 - BGM Dropout BGM-H051B (Non-drive side)

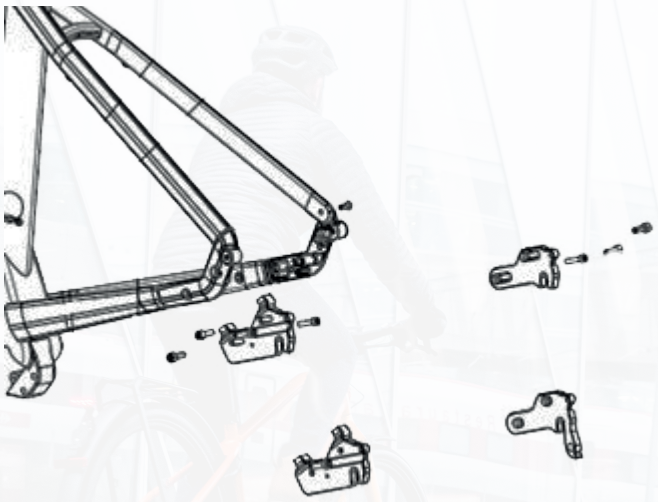

277352- BGM Seattubecover Cargoville LJ 70 20 E-Ville 21



285401 - BGM Upper battery holder

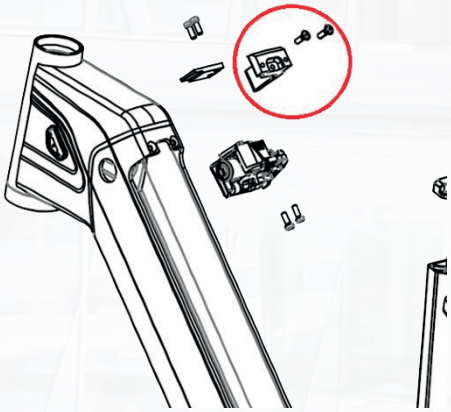

285407- BGM Chargerplug Ams-E-Ville-E-Wave 21



254422 - BGM Cableguidekit overall 17



Warranty frames for all Sub eRIDE models

Model	Replacement frame
Sub sport eRIDE 10 MEN	282529
Sub sport eRIDE 20 MEN	282529
Sub sport eRIDE 30 MEN	282529
Sub Cross eRIDE 10 MEN	282529
Sub Tour eRIDE 10 LADY	285801
Sub Tour eRIDE 20 LADY	285801
Sub Tour eRIDE 30 LADY	285801
Sub Active eRIDE LADY	285801
Sub Cross eRIDE 20 LADY	285801
Sub Cross eRIDE 30 LADY	285801
Sub Sport eRIDE 10 USX	282531
Sub Sport eRIDE 20 USX	282531
Sub Tour eRIDE 10 USX	282531
Sub Tour eRIDE 20 USX	282531
Sub Tour eRIDE 30 USX	282531
Sub Active eRIDE USX	282531
Sub Cross eRIDE 10 USX	282531
Sub Cross eRIDE 20 USX	282531
Sub Cross eRIDE 30 USX	282531
Sub sport eRIDE 10 LADY	282530
Sub sport eRIDE 20 LADY	282530
Sub sport eRIDE 30 LADY	282530
Sub Cross eRIDE 10 LADY	282530
Sub Tour eRIDE 10 MEN	285802
Sub tour eRIDE 20 MEN	285802
Sub Tour eRIDE 30 MEN	285802
Sub Active eRIDE MEN	285802
Sub Cross eRIDE 20 MEN	285802
Sub Cross eRIDE 30 MEN	285802
Sub Active eRIDE 10 USX rack	282532
Sub Active eRIDE 20 USX rack	282532
Sub Active eRIDE 30 USX rack	282532

SUB SPORT eRIDE 10 MEN



ITEM	DESCRIPTION
285809	SCO Fork Suntour SF19-NEX Sub eRIDE 21 W
275504	SCO Rear rack AXIS E-Ride/Sub-Cross
228441	SYN Headset ZS44/28.6 - ZS55/40
273039	SCO E-bike Kickstand Silence17/Sub 19
250576	SYN Grips Comfort Lock-On
273037	SCO E-bike chainguard BO Gen3 19
229733	Seatclamp 34.9mm QR Gambler 2013
278374	SCO eRIDE Motor cov Asp/Ax/Sub Gen4 20
282757	SCO Rim Cross X-17 D 32H 21
278369	SCO eRide Bat cover Asp/Ax/Sub 20
266587	SCO Cableguide set Sca/Spa/Gen H-tube 18
278375	SCO eRide Charge port BO 20
273685	SCO Dropout E-sub men/lady 19
278361	SCO eRIDE Bat mount Asp/Ax/Sub 20
271280	SCO E-bike fender E-Sub Curana 19 Wty
278380	SCO eRIDE Light Sub Lezyne E70 20 Wty

SUB SPORT eRIDE 10 LADY



ITEM	DESCRIPTION
285809	SCO Fork Suntour SF19-NEX Sub eRIDE 21 W
275504	SCO Rear rack AXIS E-Ride/Sub-Cross
228441	SYN Headset ZS44/28.6 - ZS55/40
273039	SCO E-bike Kickstand Silence17/Sub 19
250579	SYN Grips Women Comfort Lock-On
273037	SCO E-bike chainguard BO Gen3 19
229733	Seatclamp 34.9mm QR Gambler 2013
278374	SCO eRIDE Motor cov Asp/Ax/Sub Gen4 20
282757	SCO Rim Cross X-17 D 32H 21
278369	SCO eRide Bat cover Asp/Ax/Sub 20
266587	SCO Cableguide set Sca/Spa/Gen H-tube 18
278375	SCO eRide Charge port BO 20
273685	SCO Dropout E-sub men/lady 19
278361	SCO eRIDE Bat mount Asp/Ax/Sub 20
271280	SCO E-bike fender E-Sub Curana 19 Wty
278380	SCO eRIDE Light Sub Lezyne E70 20 Wty

SUB SPORT eRIDE 10 USX



ITEM	DESCRIPTION
285809	SCO Fork Suntour SF19-NEX Sub eRIDE 21 W
273039	SCO E-bike Kickstand Silence17/Sub 19
228441	SYN Headset ZS44/28.6 - ZS55/40
286002	SCO eRIDE ChainGuard Sub USX 21
250579	SYN Grips Women Comfort Lock-On
285403	BGM DU Flange Adapter GEN4 E-Wave 21
229733	Seatclamp 34.9mm QR Gambler 2013
285396	BGM Enginecover E-Wave Gen4 21
277352	BGM Seattubecover Cargoville LJ 70 20
285397	BGM Batterycover PT625 E-Wave 21
282757	SCO Rim Cross X-17 D 32H 21
277358	BGM PT600 Cover Screw 20
285374	BGM Dropout BGM-H051A
285407	BGM Chargerplug Ams-E-Ville-E-Wave 21
285375	BGM Dropout BGM-H051B
285401	BGM Upper battery holder E-Ville 21
271280	SCO E-bike fender E-Sub Curana 19 Wty
278380	SCO eRIDE Light Sub Lezyne E70 20 Wty
275504	SCO Rear rack AXIS E-Ride/Sub-Cross

SUB SPORT eRIDE 20 MEN



ITEM	DESCRIPTION
285809	SCO Fork Suntour SF19-NEX Sub eRIDE 21 W
275504	SCO Rear rack AXIS E-Ride/Sub-Cross
228441	SYN Headset ZS44/28.6 - ZS55/40
273039	SCO E-bike Kickstand Silence17/Sub 19
250576	SYN Grips Comfort Lock-On
273037	SCO E-bike chainguard BO Gen3 19
229733	Seatclamp 34.9mm QR Gambler 2013
278374	SCO eRIDE Motor cov Asp/Ax/Sub Gen4 20
282757	SCO Rim Cross X-17 D 32H 21
278369	SCO eRide Bat cover Asp/Ax/Sub 20
266587	SCO Cableguide set Sca/Spa/Gen H-tube 18
278375	SCO eRide Charge port BO 20
273685	SCO Dropout E-sub men/lady 19
278361	SCO eRIDE Bat mount Asp/Ax/Sub 20
271280	SCO E-bike fender E-Sub Curana 19 Wty
278380	SCO eRIDE Light Sub Lezyne E70 20 Wty

SUB SPORT eRIDE 20 LADY



ITEM	DESCRIPTION
285809	SCO Fork Suntour SF19-NEX Sub eRIDE 21 W
275504	SCO Rear rack AXIS E-Ride/Sub-Cross
228441	SYN Headset ZS44/28.6 - ZS55/40
273039	SCO E-bike Kickstand Silence17/Sub 19
250579	SYN Grips Women Comfort Lock-On
273037	SCO E-bike chainguard BO Gen3 19
229733	Seatclamp 34.9mm QR Gambler 2013
278374	SCO eRIDE Motor cov Asp/Ax/Sub Gen4 20
282757	SCO Rim Cross X-17 D 32H 21
278369	SCO eRide Bat cover Asp/Ax/Sub 20
266587	SCO Cableguide set Sca/Spa/Gen H-tube 18
278375	SCO eRide Charge port BO 20
273685	SCO Dropout E-sub men/lady 19
278361	SCO eRIDE Bat mount Asp/Ax/Sub 20
271280	SCO E-bike fender E-Sub Curana 19 Wty
278380	SCO eRIDE Light Sub Lezyne E70 20 Wty

SUB SPORT eRIDE 20 USX



ITEM	DESCRIPTION
285809	SCO Fork Suntour SF19-NEX Sub eRIDE 21 W
273039	SCO E-bike Kickstand Silence17/Sub 19
228441	SYN Headset ZS44/28.6 - ZS55/40
286002	SCO eRIDE ChainGuard Sub USX 21
250579	SYN Grips Women Comfort Lock-On
285403	BGM DU Flange Adapter GEN4 E-Wave 21
229733	Seatclamp 34.9mm QR Gambler 2013
285396	BGM Enginecover E-Wave Gen4 21
277352	BGM Seattubecover Cargoville LJ 70 20
285397	BGM Batterycover PT625 E-Wave 21
282757	SCO Rim Cross X-17 D 32H 21
277358	BGM PT600 Cover Screw 20
285374	BGM Dropout BGM-H051A
285407	BGM Chargerplug Ams-E-Ville-E-Wave 21
285375	BGM Dropout BGM-H051B
285401	BGM Upper battery holder E-Ville 21
271280	SCO E-bike fender E-Sub Curana 19 Wty
278380	SCO eRIDE Light Sub Lezyne E70 20 Wty
275504	SCO Rear rack AXIS E-Ride/Sub-Cross

SUB TOUR eRIDE 10 MEN



ITEM	DESCRIPTION
285809	SCO Fork Suntour SF19-NEX Sub eRIDE 21 W
275504	SCO Rear rack AXIS E-Ride/Sub-Cross
228441	SYN Headset ZS44/28.6 - ZS55/40
273039	SCO E-bike Kickstand Silence17/Sub 19
250576	SYN Grips Comfort Lock-On
273037	SCO E-bike chainguard BO Gen3 19
229733	Seatclamp 34.9mm QR Gambler 2013
278374	SCO eRIDE Motor cov Asp/Ax/Sub Gen4 20
282757	SCO Rim Cross X-17 D 32H 21
278369	SCO eRide Bat cover Asp/Ax/Sub 20
266587	SCO Cableguide set Sca/Spa/Gen H-tube 18
278375	SCO eRide Charge port BO 20
273685	SCO Dropout E-sub men/lady 19
278361	SCO eRIDE Bat mount Asp/Ax/Sub 20
271280	SCO E-bike fender E-Sub Curana 19 Wty
278380	SCO eRIDE Light Sub Lezyne E70 20 Wty

SUB TOUR eRIDE 10 LADY



ITEM	DESCRIPTION
285809	SCO Fork Suntour SF19-NEX Sub eRIDE 21 W
275504	SCO Rear rack AXIS E-Ride/Sub-Cross
228441	SYN Headset ZS44/28.6 - ZS55/40
273039	SCO E-bike Kickstand Silence17/Sub 19
250579	SYN Grips Women Comfort Lock-On
273037	SCO E-bike chainguard BO Gen3 19
229733	Seatclamp 34.9mm QR Gambler 2013
278374	SCO eRIDE Motor cov Asp/Ax/Sub Gen4 20
282757	SCO Rim Cross X-17 D 32H 21
278369	SCO eRide Bat cover Asp/Ax/Sub 20
266587	SCO Cableguide set Sca/Spa/Gen H-tube 18
278375	SCO eRide Charge port BO 20
273685	SCO Dropout E-sub men/lady 19
278361	SCO eRIDE Bat mount Asp/Ax/Sub 20
271280	SCO E-bike fender E-Sub Curana 19 Wty
278380	SCO eRIDE Light Sub Lezyne E70 20 Wty

SUB TOUR eRIDE 10 USX



ITEM	DESCRIPTION
285809	SCO Fork Suntour SF19-NEX Sub eRIDE 21 W
275504	SCO Rear rack AXIS E-Ride/Sub-Cross
228441	SYN Headset ZS44/28.6 - ZS55/40
273039	SCO E-bike Kickstand Silence17/Sub 19
250579	SYN Grips Women Comfort Lock-On
286002	SCO eRIDE ChainGuard Sub USX 21
229733	Seatclamp 34.9mm QR Gambler 2013
285395	BGM Enginecover E-Wave Gen3 21
277352	BGM Seattubecover Cargoville LJ 70 20
285397	BGM Batterycover PT625 E-Wave 21
254422	BGM Cableguidekit overall 17
277358	BGM PT600 Cover Screw 20
282757	SCO Rim Cross X-17 D 32H 21
285407	BGM Chargerplug Ams-E-Ville-E-Wave 21
285374	BGM Dropout BGM-H051A
285401	BGM Upper battery holder E-Ville 21
285375	BGM Dropout BGM-H051B
278380	SCO eRIDE Light Sub Lezyne E70 20 Wty
271280	SCO E-bike fender E-Sub Curana 19 Wty

SUB TOUR eRIDE 20 MEN



ITEM	DESCRIPTION
285809	SCO Fork Suntour SF19-NEX Sub eRIDE 21 W
275504	SCO Rear rack AXIS E-Ride/Sub-Cross
228441	SYN Headset ZS44/28.6 - ZS55/40
273039	SCO E-bike Kickstand Silence17/Sub 19
250576	SYN Grips Comfort Lock-On
273037	SCO E-bike chainguard BO Gen3 19
229733	Seatclamp 34.9mm QR Gambler 2013
278374	SCO eRIDE Motor cov Asp/Ax/Sub Gen4 20
282757	SCO Rim Cross X-17 D 32H 21
278369	SCO eRide Bat cover Asp/Ax/Sub 20
266587	SCO Cableguide set Sca/Spa/Gen H-tube 18
278375	SCO eRide Charge port BO 20
273685	SCO Dropout E-sub men/lady 19
278361	SCO eRIDE Bat mount Asp/Ax/Sub 20
271280	SCO E-bike fender E-Sub Curana 19 Wty
278380	SCO eRIDE Light Sub Lezyne E70 20 Wty

SUB TOUR eRIDE 20 LADY



ITEM	DESCRIPTION
285809	SCO Fork Suntour SF19-NEX Sub eRIDE 21 W
275504	SCO Rear rack AXIS E-Ride/Sub-Cross
228441	SYN Headset ZS44/28.6 - ZS55/40
273039	SCO E-bike Kickstand Silence17/Sub 19
250579	SYN Grips Women Comfort Lock-On
273037	SCO E-bike chainguard BO Gen3 19
229733	Seatclamp 34.9mm QR Gambler 2013
278374	SCO eRIDE Motor cov Asp/Ax/Sub Gen4 20
282757	SCO Rim Cross X-17 D 32H 21
278369	SCO eRide Bat cover Asp/Ax/Sub 20
266587	SCO Cableguide set Sca/Spa/Gen H-tube 18
278375	SCO eRide Charge port BO 20
273685	SCO Dropout E-sub men/lady 19
278361	SCO eRIDE Bat mount Asp/Ax/Sub 20
271280	SCO E-bike fender E-Sub Curana 19 Wty
278380	SCO eRIDE Light Sub Lezyne E70 20 Wty

SUB TOUR eRIDE 20 USX



ITEM	DESCRIPTION
285809	SCO Fork Suntour SF19-NEX Sub eRIDE 21 W
275504	SCO Rear rack AXIS E-Ride/Sub-Cross
228441	SYN Headset ZS44/28.6 - ZS55/40
273039	SCO E-bike Kickstand Silence17/Sub 19
250579	SYN Grips Women Comfort Lock-On
286002	SCO eRIDE ChainGuard Sub USX 21
229733	Seatclamp 34.9mm QR Gambler 2013
285395	BGM Enginecover E-Wave Gen3 21
277352	BGM Seattubecover Cargoville LJ 70 20
285397	BGM Batterycover PT625 E-Wave 21
254422	BGM Cableguidekit overall 17
277358	BGM PT600 Cover Screw 20
282757	SCO Rim Cross X-17 D 32H 21
285399	BGM DT Converter vertical PT500/PT600 21
285374	BGM Dropout BGM-H051A
285407	BGM Chargerplug Ams-E-Ville-E-Wave 21
285375	BGM Dropout BGM-H051B
285401	BGM Upper battery holder E-Ville 21
271280	SCO E-bike fender E-Sub Curana 19 Wty
278380	SCO eRIDE Light Sub Lezyne E70 20 Wty

SUB TOUR eRIDE 30 MEN



ITEM	DESCRIPTION
285809	SCO Fork Suntour SF19-NEX Sub eRIDE 21 W
275504	SCO Rear rack AXIS E-Ride/Sub-Cross
228441	SYN Headset ZS44/28.6 - ZS55/40
273039	SCO E-bike Kickstand Silence17/Sub 19
250576	SYN Grips Comfort Lock-On
273037	SCO E-bike chainguard BO Gen3 19
229733	Seatclamp 34.9mm QR Gambler 2013
278374	SCO eRIDE Motor cov Asp/Ax/Sub Gen4 20
282757	SCO Rim Cross X-17 D 32H 21
278369	SCO eRide Bat cover Asp/Ax/Sub 20
266587	SCO Cableguide set Sca/Spa/Gen H-tube 18
278375	SCO eRide Charge port BO 20
273685	SCO Dropout E-sub men/lady 19
278361	SCO eRIDE Bat mount Asp/Ax/Sub 20
271280	SCO E-bike fender E-Sub Curana 19 Wty
278380	SCO eRIDE Light Sub Lezyne E70 20 Wty

SUB TOUR eRIDE 30 LADY



ITEM	DESCRIPTION
285809	SCO Fork Suntour SF19-NEX Sub eRIDE 21 W
275504	SCO Rear rack AXIS E-Ride/Sub-Cross
228441	SYN Headset ZS44/28.6 - ZS55/40
273039	SCO E-bike Kickstand Silence17/Sub 19
250579	SYN Grips Women Comfort Lock-On
273037	SCO E-bike chainguard BO Gen3 19
229733	Seatclamp 34.9mm QR Gambler 2013
278374	SCO eRIDE Motor cov Asp/Ax/Sub Gen4 20
282757	SCO Rim Cross X-17 D 32H 21
278369	SCO eRide Bat cover Asp/Ax/Sub 20
266587	SCO Cableguide set Sca/Spa/Gen H-tube 18
278375	SCO eRide Charge port BO 20
273685	SCO Dropout E-sub men/lady 19
278361	SCO eRIDE Bat mount Asp/Ax/Sub 20
271280	SCO E-bike fender E-Sub Curana 19 Wty
278380	SCO eRIDE Light Sub Lezyne E70 20 Wty

SUB TOUR eRIDE 30 USX



ITEM	DESCRIPTION
285809	SCO Fork Suntour SF19-NEX Sub eRIDE 21 W
275504	SCO Rear rack AXIS E-Ride/Sub-Cross
228441	SYN Headset ZS44/28.6 - ZS55/40
273039	SCO E-bike Kickstand Silence17/Sub 19
250579	SYN Grips Women Comfort Lock-On
286002	SCO eRIDE ChainGuard Sub USX 21
229733	Seatclamp 34.9mm QR Gambler 2013
285395	BGM Enginecover E-Wave Gen3 21
277352	BGM Seattubecover Cargoville LJ 70 20
285397	BGM Batterycover PT625 E-Wave 21
254422	BGM Cableguidekit overall 17
277358	BGM PT600 Cover Screw 20
282757	SCO Rim Cross X-17 D 32H 21
285399	BGM DT Converter vertical PT500/PT600 21
285374	BGM Dropout BGM-H051A
285407	BGM Chargerplug Ams-E-Ville-E-Wave 21
285375	BGM Dropout BGM-H051B
285401	BGM Upper battery holder E-Ville 21
271280	SCO E-bike fender E-Sub Curana 19 Wty
278380	SCO eRIDE Light Sub Lezyne E70 20 Wty

SUB ACTIVE eRIDE MEN



ITEM	DESCRIPTION
285809	SCO Fork Suntour SF19-NEX Sub eRIDE 21 W
275504	SCO Rear rack AXIS E-Ride/Sub-Cross
228441	SYN Headset ZS44/28.6 - ZS55/40
273039	SCO E-bike Kickstand Silence17/Sub 19
250576	SYN Grips Comfort Lock-On
273037	SCO E-bike chainguard BO Gen3 19
229733	Seatclamp 34.9mm QR Gambler 2013
278374	SCO eRIDE Motor cov Asp/Ax/Sub Gen4 20
282757	SCO Rim Cross X-17 D 32H 21
278369	SCO eRide Bat cover Asp/Ax/Sub 20
266587	SCO Cableguide set Sca/Spa/Gen H-tube 18
278375	SCO eRide Charge port BO 20
273685	SCO Dropout E-sub men/lady 19
278361	SCO eRIDE Bat mount Asp/Ax/Sub 20
271280	SCO E-bike fender E-Sub Curana 19 Wty

SUB ACTIVE eRIDE LADY



ITEM	DESCRIPTION
285809	SCO Fork Suntour SF19-NEX Sub eRIDE 21 W
275504	SCO Rear rack AXIS E-Ride/Sub-Cross
228441	SYN Headset ZS44/28.6 - ZS55/40
273039	SCO E-bike Kickstand Silence17/Sub 19
250579	SYN Grips Women Comfort Lock-On
273037	SCO E-bike chainguard BO Gen3 19
229733	Seatclamp 34.9mm QR Gambler 2013
278374	SCO eRIDE Motor cov Asp/Ax/Sub Gen4 20
282757	SCO Rim Cross X-17 D 32H 21
278369	SCO eRide Bat cover Asp/Ax/Sub 20
266587	SCO Cableguide set Sca/Spa/Gen H-tube 18
278375	SCO eRide Charge port BO 20
273685	SCO Dropout E-sub men/lady 19
278361	SCO eRIDE Bat mount Asp/Ax/Sub 20
271280	SCO E-bike fender E-Sub Curana 19 Wty

SUB ACTIVE eRIDE USX



ITEM	DESCRIPTION
285809	SCO Fork Suntour SF19-NEX Sub eRIDE 21 W
275504	SCO Rear rack AXIS E-Ride/Sub-Cross
228441	SYN Headset ZS44/28.6 - ZS55/40
273039	SCO E-bike Kickstand Silence17/Sub 19
250579	SYN Grips Women Comfort Lock-On
286002	SCO eRIDE ChainGuard Sub USX 21
229733	Seatclamp 34.9mm QR Gambler 2013
285395	BGM Enginecover E-Wave Gen3 21
277352	BGM Seattubecover Cargoville LJ 70 20
285397	BGM Batterycover PT625 E-Wave 21
254422	BGM Cableguidekit overall 17
277358	BGM PT600 Cover Screw 20
282757	SCO Rim Cross X-17 D 32H 21
285399	BGM DT Converter vertical PT500/PT600 21
285374	BGM Dropout BGM-H051A
285407	BGM Chargerplug Ams-E-Ville-E-Wave 21
285375	BGM Dropout BGM-H051B
285401	BGM Upper battery holder E-Ville 21
271280	SCO E-bike fender E-Sub Curana 19 Wty

SUB ACTIVE eRIDE 10 USX RACK



ITEM	DESCRIPTION
200718	Headset Ritchey sem.int.11/8
250576	SYN Grips Comfort Lock-On
229733	Seatclamp 34.9mm QR Gambler 2013
282757	SCO Rim Cross X-17 D 32H 21
266587	SCO Cableguide set Sca/Spa/Gen H-tube 18
206375	Dropout+Screw all MTB since'97 5-PAK
271280	SCO E-bike fender E-Sub Curana 19 Wty
250604	SYN Kickstand 2 bolts Direct Mount

SUB ACTIVE eRIDE 20 USX RACK



ITEM	DESCRIPTION
200718	Headset Ritchey sem.int.11/8
250576	SYN Grips Comfort Lock-On
229733	Seatclamp 34.9mm QR Gambler 2013
282757	SCO Rim Cross X-17 D 32H 21
266587	SCO Cableguide set Sca/Spa/Gen H-tube 18
206375	Dropout+Screw all MTB since'97 5-PAK
271280	SCO E-bike fender E-Sub Curana 19 Wty
250604	SYN Kickstand 2 bolts Direct Mount

SUB ACTIVE eRIDE 30 USX RACK



ITEM	DESCRIPTION
200718	Headset Ritchey sem.int.11/8
250576	SYN Grips Comfort Lock-On
229733	Seatclamp 34.9mm QR Gambler 2013
282757	SCO Rim Cross X-17 D 32H 21
266587	SCO Cableguide set Sca/Spa/Gen H-tube 18
206375	Dropout+Screw all MTB since'97 5-PAK
271280	SCO E-bike fender E-Sub Curana 19 Wty
250604	SYN Kickstand 2 bolts Direct Mount

SUB CROSS eRIDE 10 MEN



ITEM	DESCRIPTION
228441	SYN Headset ZS44/28.6 - ZS55/40
250576	SYN Grips Comfort Lock-On
229733	Seatclamp 34.9mm QR Gambler 2013
282757	SCO Rim Cross X-17 D 32H 21
266587	SCO Cableguide set Sca/Spa/Gen H-tube 18
273685	SCO Dropout E-sub men/lady 19
273039	SCO E-bike Kickstand Silence17/Sub 19
273037	SCO E-bike chainguard BO Gen3 19
278374	SCO eRIDE Motor cov Asp/Ax/Sub Gen4 20
278369	SCO eRide Bat cover Asp/Ax/Sub 20
278375	SCO eRide Charge port BO 20
278361	SCO eRIDE Bat mount Asp/Ax/Sub 20

SUB CROSS eRIDE 10 LADY



ITEM	DESCRIPTION
228441	SYN Headset ZS44/28.6 - ZS55/40
250579	SYN Grips Women Comfort Lock-On
229733	Seatclamp 34.9mm QR Gambler 2013
282757	SCO Rim Cross X-17 D 32H 21
266587	SCO Cableguide set Sca/Spa/Gen H-tube 18
273685	SCO Dropout E-sub men/lady 19
273039	SCO E-bike Kickstand Silence17/Sub 19
273037	SCO E-bike chainguard BO Gen3 19
278374	SCO eRIDE Motor cov Asp/Ax/Sub Gen4 20
278369	SCO eRide Bat cover Asp/Ax/Sub 20
278375	SCO eRide Charge port BO 20
278361	SCO eRIDE Bat mount Asp/Ax/Sub 20

SUB CROSS eRIDE 10 USX



ITEM	DESCRIPTION
228441	SYN Headset ZS44/28.6 - ZS55/40
273039	SCO E-bike Kickstand Silence17/Sub 19
250579	SYN Grips Women Comfort Lock-On
286002	SCO eRIDE ChainGuard Sub USX 21
229733	Seatclamp 34.9mm QR Gambler 2013
285396	BGM Enginecover E-Wave Gen4 21
277352	BGM Seattubecover Cargoville LJ 70 20
285403	BGM DU Flange Adapter GEN4 E-Wave 21
254422	BGM Cableguidekit overall 17
285397	BGM Batterycover PT625 E-Wave 21
282757	SCO Rim Cross X-17 D 32H 21
277358	BGM PT600 Cover Screw 20
285374	BGM Dropout BGM-H051A
285407	BGM Chargerplug Ams-E-Ville-E-Wave 21
285375	BGM Dropout BGM-H051B
285401	BGM Upper battery holder E-Ville 21

SUB CROSS eRIDE 20 MEN



ITEM	DESCRIPTION
228441	SYN Headset ZS44/28.6 - ZS55/40
250576	SYN Grips Comfort Lock-On
229733	Seatclamp 34.9mm QR Gambler 2013
282757	SCO Rim Cross X-17 D 32H 21
266587	SCO Cableguide set Sca/Spa/Gen H-tube 18
273685	SCO Dropout E-sub men/lady 19
273039	SCO E-bike Kickstand Silence17/Sub 19
273037	SCO E-bike chainguard BO Gen3 19
278374	SCO eRIDE Motor cov Asp/Ax/Sub Gen4 20
278369	SCO eRide Bat cover Asp/Ax/Sub 20
278375	SCO eRide Charge port BO 20
278361	SCO eRIDE Bat mount Asp/Ax/Sub 20

SUB CROSS eRIDE 20 LADY



ITEM	DESCRIPTION
228441	SYN Headset ZS44/28.6 - ZS55/40
250579	SYN Grips Women Comfort Lock-On
229733	Seatclamp 34.9mm QR Gambler 2013
282757	SCO Rim Cross X-17 D 32H 21
266587	SCO Cableguide set Sca/Spa/Gen H-tube 18
273685	SCO Dropout E-sub men/lady 19
273039	SCO E-bike Kickstand Silence17/Sub 19
273037	SCO E-bike chainguard BO Gen3 19
278374	SCO eRIDE Motor cov Asp/Ax/Sub Gen4 20
278369	SCO eRide Bat cover Asp/Ax/Sub 20
278375	SCO eRide Charge port BO 20
278361	SCO eRIDE Bat mount Asp/Ax/Sub 20

SUB CROSS eRIDE 20 USX



ITEM	DESCRIPTION
228441	SYN Headset ZS44/28.6 - ZS55/40
273039	SCO E-bike Kickstand Silence17/Sub 19
250579	SYN Grips Women Comfort Lock-On
286002	SCO eRIDE ChainGuard Sub USX 21
229733	Seatclamp 34.9mm QR Gambler 2013
285395	BGM Enginecover E-Wave Gen3 21
277352	BGM Seattubecover Cargoville LJ 70 20
285397	BGM Batterycover PT625 E-Wave 21
254422	BGM Cableguidekit overall 17
277358	BGM PT600 Cover Screw 20
282757	SCO Rim Cross X-17 D 32H 21
285399	BGM DT Converter vertical PT500/PT600 21
285374	BGM Dropout BGM-H051A
285407	BGM Chargerplug Ams-E-Ville-E-Wave 21
285375	BGM Dropout BGM-H051B
285401	BGM Upper battery holder E-Ville 21

SUB CROSS eRIDE 30 MEN



ITEM	DESCRIPTION
228441	SYN Headset ZS44/28.6 - ZS55/40
250576	SYN Grips Comfort Lock-On
229733	Seatclamp 34.9mm QR Gambler 2013
282757	SCO Rim Cross X-17 D 32H 21
266587	SCO Cableguide set Sca/Spa/Gen H-tube 18
273685	SCO Dropout E-sub men/lady 19
273039	SCO E-bike Kickstand Silence17/Sub 19
273037	SCO E-bike chainguard BO Gen3 19
278374	SCO eRIDE Motor cov Asp/Ax/Sub Gen4 20
278369	SCO eRide Bat cover Asp/Ax/Sub 20
278375	SCO eRide Charge port BO 20
278361	SCO eRIDE Bat mount Asp/Ax/Sub 20

SUB CROSS eRIDE 30 LADY



ITEM	DESCRIPTION
228441	SYN Headset ZS44/28.6 - ZS55/40
250579	SYN Grips Women Comfort Lock-On
229733	Seatclamp 34.9mm QR Gambler 2013
282757	SCO Rim Cross X-17 D 32H 21
266587	SCO Cableguide set Sca/Spa/Gen H-tube 18
273685	SCO Dropout E-sub men/lady 19
273039	SCO E-bike Kickstand Silence17/Sub 19
273037	SCO E-bike chainguard BO Gen3 19
278374	SCO eRIDE Motor cov Asp/Ax/Sub Gen4 20
278369	SCO eRide Bat cover Asp/Ax/Sub 20
278375	SCO eRide Charge port BO 20
278361	SCO eRIDE Bat mount Asp/Ax/Sub 20

SUB CROSS eRIDE 30 USX



ITEM	DESCRIPTION
228441	SYN Headset ZS44/28.6 - ZS55/40
273039	SCO E-bike Kickstand Silence17/Sub 19
250579	SYN Grips Women Comfort Lock-On
286002	SCO eRIDE ChainGuard Sub USX 21
229733	Seatclamp 34.9mm QR Gambler 2013
285395	BGM Enginecover E-Wave Gen3 21
277352	BGM Seattubecover Cargoville LJ 70 20
285397	BGM Batterycover PT625 E-Wave 21
254422	BGM Cableguidekit overall 17
277358	BGM PT600 Cover Screw 20
282757	SCO Rim Cross X-17 D 32H 21
285399	BGM DT Converter vertical PT500/PT600 21
285374	BGM Dropout BGM-H051A
285407	BGM Chargerplug Ams-E-Ville-E-Wave 21
285375	BGM Dropout BGM-H051B
285401	BGM Upper battery holder E-Ville 21

ROXTER eRIDE 26



ITEM	DESCRIPTION
206375	SCO Dropout+Screw all MTB since 97' 5-PAK
220693	SCO Speed Sensor Mount Kit E-SUB/Sportster
200718	SCO Headset Ritchey sem.int.11/8
275465	SYN Grips Kids
229733	SCO Seatclamp 34.9mm QR Gambler
278377	SCO eRIDE Rim Roxter 20 Wty
273688	SCO E-bike crankset Bosch BNI 19 Wty
235463	SCO E-Bike battery socket E-Spark
250604	SYN Kickstand 2 bolts Direct Mount

ROXTER eRIDE 24



ITEM	DESCRIPTION
271277	SCO E-bike fork Roxter 24 eRide 19
206375	SCO Dropout+Screw all MTB since 97' 5-PAK
220693	SCO Speed Sensor Mount Kit E-SUB/Sportster
200718	SCO Headset Ritchey sem.int.11/8
275465	SYN Grips Kids
229733	SCO Seatclamp 34.9mm QR Gambler
271263	SCO Hub rep kit Form CL2510 F 19
278377	SCO eRIDE Rim Roxter 20 Wty
273687	SCO E-bike crankset Roxter 24 155mm Wty
271279	SCO E-bike front wheel Roxter 24 19 Wty
273688	SCO E-bike crankset Bosch BNI 19 Wty
235463	SCO E-Bike battery socket E-Spark
250604	SYN Kickstand 2 bolts Direct Mount

eRIDE URBAN/TREKKING WARRANTY FRAMES & TECHNICAL DATA

ITEM	FRONT TRIANGLES & MTB FRAMES
282388	SCO Front triangle Ransom eRIDE 910 21
282389	SCO Front triangle Ransom eRIDE 920 21
282390	SCO Front triangle Genius eRIDE TND 21
282391	SCO Front triangle Genius eRIDE 900 21
282392	SCO Front triangle Genius eRIDE 910 21
282393	SCO Front triangle Genius eRIDE 920 21
282394	SCO Front triangle Genius eRIDE 930 21
282395	SCO Front triangle Strike eRIDE PRE 21
282396	SCO Front triangle Strike eRIDE 900 21
282397	SCO Front triangle Strike eRIDE 910 21
282398	SCO Front triangle Strike eRIDE 920 21
282399	SCO Front triangle Strike eRIDE 930 21
282400	SCO Front triangle Strike eRIDE 940 21
282424	SCO Frame Cont Genius 920 21 Wty
282425	SCO Frame Aspect eRIDE 910 21 Wty
282426	SCO Frame Aspect eRIDE 930 21 Wty
282427	SCO Frame Aspect eRIDE 950 21 Wty
276347	SCO Frame Roxter eRide 26 20 Wty
276348	SCO Frame Roxter eRide 24 20 Wty
ITEM	ADDICT eRIDE
282521	SCO Frameset Addict eRIDE PR 21 Wty
ITEM	FRONT TRIANGLES & FRAMES URBAN
282401	SCO Front triangle Axis eRIDE Evo 45K 21
282402	SCO Front triangle Axis eRIDE Evo 21
282428	SCO Frame Axis eRIDE 10 men 21 Wty
282429	SCO Frame Axis eRIDE 10 Lady 21 Wry
285796	SCO Frame Silence eRIDE Evo 45KM 21 Wty
285797	SCO Frame Silence eRIDE 10 Men 45KM 21
285798	SCO Frame Silence eRIDE 10 Lady 45KM 21
285799	SCO Frame Silence eRIDE 20 Men 45KM 21
285800	SCO Frame Silence eRIDE 20 Lady 45KM 21
282527	SCO Frame Silence eRIDE 30 Men 21
282528	SCO Frame Silence eRIDE 30 Lady 21
282529	SCO Frame Sub Sport eRIDE 10 Men 21 Wty
282530	SCO Frame Sub Sport eRIDE 10 Lady 21 Wty
282531	SCO Frame Sub Sport eRIDE 10 USX 21 Wty
282532	SCO Frame Sub Active eRIDE 10 USX rac 21
285802	SCO Frame Sub Tour eRIDE 10 Men 21 Wty
285801	SCO Frame Sub Tour eRIDE 10 Lady 21 Wty
ITEM	Chainstay & Seatstay Genius eRIDE
282451	SCO Chainstays Genius eRIDE TND 21
282452	SCO Chainstays Genius eRIDE 900 21
282453	SCO Chainstays Genius eRIDE 910 21
282454	SCO Chainstays Genius eRIDE 920 21
282455	SCO Chainstays Genius eRIDE 930 21
282478	SCO Seatstays Genius eRIDE TND 21
282479	SCO Seatstays Genius eRIDE 900 21
282480	SCO Seatstays Genius eRIDE 910 21
282481	SCO Seatstays Genius eRIDE 920 21
282482	SCO Seatstays Genius eRIDE 930 21
ITEM	Chainstat & Seatstay Ransom eRIDE
282449	SCO Chainstays Ransom eRIDE 910 21
282450	SCO Chainstays Ransom eRIDE 920 21
282476	SCO Seatstays Ransom eRIDE 910 21
282477	SCO Seatstays Ransom eRIDE 920 21

	Max Rotor Size	BB-spec	F.Derailleur spec	Crankarm	Headset	Stem Length	Bar Width	Seatpost	Seatpost Clamp	Rear Shock (e2e)	Hardware Shock
SCO Bike Ransom eRIDE 910 US	203MM	NONE	NONE	165MM	28.6 52.0 BLACK BLACK 5.9 WITH-OUT TOP COVER	50MM	800MM	"31.6X363MM(S) ; 31.6X418MM(M) ; 31.6X475MM(L/XL)"	34.9MM	205x65MM	30X8MM
SCO Bike Ransom eRIDE 920 US	203MM	NONE	NONE	165MM	28.6 52.0 BLACK BLACK 5.9 WITH-OUT TOP COVER	50MM	800MM	"31.6X412MM(S) ; 31.6X459MM(M) ; 31.6X499MM(L/XL)"	34.9MM	205x65MM	30X8MM
SCO Bike Genius eRIDE 900 Tuned	203MM	NONE	NONE	165MM	28.6 52.0 BLACK BLACK 5.9 WITH-OUT TOP COVER	50MM	780MM	"31.6X308MM(S) ; 31.6X363MM(M) ; 31.6X418MM(L) ; 31.6X475MM(XL)"	34.9MM	185x55MM	30X8MM
SCO Bike Genius eRIDE 900	203MM	NONE	NONE	165MM	28.6 52.0 BLACK BLACK 5.9 WITH-OUT TOP COVER	"50MM(S/M) ; 60MM(L) 70MM(XL)"	780MM	"31.6X357MM(S) ; 31.6X412MM(M) ; 31.6X459MM(L) ; 31.6X499MM(XL)"	34.9MM	185x55MM	30X8MM
SCO Bike Genius eRIDE 910	203MM	NONE	NONE	165MM	28.6 52.0 BLACK BLACK 5.9 WITH-OUT TOP COVER	"50MM(S/M) ; 60MM(L) 70MM(XL)"	780MM	"31.6X308MM(S) ; 31.6X363MM(M) ; 31.6X418MM(L) ; 31.6X475MM(XL)"	34.9MM	185x55MM	30X8MM
SCO Bike Genius eRIDE 920	203MM	NONE	NONE	165MM	28.6 52.0 BLACK BLACK 5.9 WITH-OUT TOP COVER	"50MM(S/M) ; 60MM(L) 70MM(XL)"	780MM	"31.6X357MM(S) ; 31.6X412MM(M) ; 31.6X459MM(L) ; 31.6X499MM(XL)"	34.9MM	185x55MM	30X8MM
SCO Bike Genius eRIDE 930	203MM	NONE	NONE	165MM	28.6 52.0 BLACK BLACK 5.9 WITH-OUT TOP COVER	"50MM(S/M) ; 60MM(L) 70MM(XL)"	780MM	"31.6X357MM(S) ; 31.6X412MM(M) ; 31.6X459MM(L) ; 31.6X499MM(XL)"	34.9MM	185x55MM	30X8MM
SCO Bike Strike eRIDE 900 Premium	203MM	NONE	NONE	165MM	SI31815Z, 28.6-44-56-39.8, H=18.7, ALLOY, ANOD.BLK	"50MM(S/M) ; 60MM(L) 70MM(XL)"	760MM	"31.6X308MM(S) ; 31.6X363MM(M) ; 31.6X418MM(L) ; 31.6X475MM(XL)"	34.9MM	185x50MM	30X8MM
SCO Bike Strike eRIDE 900	203MM	NONE	NONE	165MM	SI31815Z, 28.6-44-56-39.8, H=18.7, ALLOY, ANOD.BLK	"50MM(S/M) ; 60MM(L) 70MM(XL)"	760MM	"31.6X357MM(S) ; 31.6X412MM(M) ; 31.6X459MM(L) ; 31.6X499MM(XL)"	34.9MM	185x50MM	30X8MM
SCO Bike Strike eRIDE 910	203MM	NONE	NONE	165MM	SI31815Z, 28.6-44-56-39.8, H=18.7, ALLOY, ANOD.BLK	"50MM(S/M) ; 60MM(L) 70MM(XL)"	760MM	"31.6X308MM(S) ; 31.6X363MM(M) ; 31.6X418MM(L) ; 31.6X475MM(XL)"	34.9MM	185x50MM	30X8MM

	Max Rotor Size	BB-spec	F.Derailleur spec	Crankarm	Headset	Stem Length	Bar Width	Seatpost	Seatpost Clamp	Rear Shock (e2e)	Hardware Shock
SCO Bike Strike eRIDE 920	203MM	NONE	NONE	165MM	SI31815Z, 28.6-44-56-39.8, H=18.7, ALLOY, ANOD.BLK	"50MM(S/M) ; 60MM(L) 70MM(XL)"	760MM	"31.6X357MM(S) ; 31.6X412MM(M) ; 31.6X459MM(L) ; 31.6X499MM(XL)"	34.9MM	185x50MM	30X8MM
SCO Bike Strike eRIDE 930 black	203MM	NONE	NONE	165MM	SI31815Z, 28.6-44-56-39.8, H=18.7, ALLOY, ANOD.BLK	"50MM(S/M) ; 60MM(L) 70MM(XL)"	760MM	"31.6X357MM(S) ; 31.6X412MM(M) ; 31.6X459MM(L) ; 31.6X499MM(XL)"	34.9MM	185x50MM	30X8MM
SCO Bike Strike eRIDE 930 blue	203MM	NONE	NONE	165MM	SI31815Z, 28.6-44-56-39.8, H=18.7, ALLOY, ANOD.BLK	"50MM(S/M) ; 60MM(L) 70MM(XL)"	760MM	"31.6X357MM(S) ; 31.6X412MM(M) ; 31.6X459MM(L) ; 31.6X499MM(XL)"	34.9MM	185x50MM	30X8MM
SCO Bike Strike eRIDE 940	203MM	NONE	NONE	165MM	SI31815Z, 28.6-44-56-39.8, H=18.7, ALLOY, ANOD.BLK	"50MM(S/M) ; 60MM(L) 70MM(XL)"	760MM	"31.6X357MM(S) ; 31.6X412MM(M) ; 31.6X459MM(L) ; 31.6X499MM(XL)"	34.9MM	185x50MM	30X8MM
SCO Bike Addict eRIDE Premium US	160MM	SM-BB92-41B FOR ROAD	FD-R9150-F 11S FOR DOUBLE	"170MM(49/52) ; 172.5MM(54/56) 175MM(58)"	IS52/31.8 - IS52/40 SYNCROS ADDICT RC 51.9, 40,51.9, 40,	"90MM(49) ; 100MM(52) 110MM(54/56) ; 120MM(58)"	"400MM(49) 420(52 /54/56/58)"	"350X5MM:49/52/54 400X20MM:56/58"	W/SPOST	NONE	NONE
SCO Bike Addict eRIDE 10 US	160MM	SM-BB71-41B FOR ROAD	FD-R8050-F 11S FOR DOUBLE Di2	"170MM(49/52) ; 172.5MM(54/56) 175MM(58)"	IS52/31.8 - IS52/40 SYNCROS ADDICT RC 51.9, 40,51.9, 40,	"90MM(49) ; 100MM(52) 110MM(54/56) ; 120MM(58)"	"400MM(49) 420(52 /54/56/58)"	"350X5MM:49/52/54 400X20MM:56/58"	W/SPOST	NONE	NONE
SCO Bike Addict eRIDE 20 US	160MM	RS500-PB FOR ROAD	FD-R7000-F 11S BLK BRAZE-ON D-SWING/61-66 FOR 46-53 TOP	"170MM(49/52) ; 172.5MM(54/56) 175MM(58)"	IS52/31.8 - IS52/40 SYNCROS ADDICT RC 51.9, 40,51.9, 40,	"90MM(49) ; 100MM(52) 110MM(54/56) ; 120MM(58)"	"400MM(49) 420(52 /54/56/58)"	"350X5MM:49/52/54 400X20MM:56/58"	W/SPOST	NONE	NONE
SCO Bike Contessa Addict eRIDE 10 (EU)	160mm	Bosch Drive unit	None	170/170/ 172.5/172.5	IS52/31.8 - IS52/40 SYNCROS ADDICT RC 51.9, 40,51.9, 40,	90/90/ 100/100	400/400/ 420/420	"350X5MM:49/52/54 400X20MM:56"	W/SPOST	NONE	NONE
SCO Bike Contessa Strike eRIDE 920 US	203MM	NONE	NONE	165MM	SI31815Z, 28.6-44-56-39.8, H=18.7, ALLOY, ANOD.BLK	50MM(S/M) ; 60MM(L)	740MM	"31.6X357MM(S) ; 31.6X412MM(M) ; 31.6X459MM(L) "	34.9MM	185x50MM	30X8MM

	Max Rotor Size	BB-spec	F.Derailleur spec	Crankarm	Headset	Stem Length	Bar Width	Seatpost	Seatpost Clamp	Rear Shock (e2e)	Hardware Shock
SCO Bike Contessa Genius eRIDE 910	203MM	Bosch Drive unit	None	165	Locking ZS44/28.6 | ZS56/40 1-1/8"- 1.5" ACBearing	50	760	"31.6X357mm (S) 100mm 31.6X412mm (M) 125mm 31.6X459mm (L) 150mm "	34.9MM	185x55MM	30X8MM
SCO Bike Contessa Strike eRIDE 910	203MM	Bosch Drive unit	None	165	ZS44/28.6 | EC56/40 1-1/8"- 1.5" ACBearing	50	740	"31.6X357mm (S) 100mm 31.6X412mm (M) 125mm 31.6X459mm (L) 150mm "	34.9MM	185x55MM	30X8MM
SCO Bike Contessa Addict eRIDE 10 US	160MM	SM-BB71-41B FOR ROAD	R8050-F 11S FOR DOUBLE Di2	170MM(49/52) ; 172.5MM(54/56)	IS52/31.8 - IS52/40 SYNCROS ADDICT RC 51.9, 41,51.9, 41,	"90MM (49/52) 100MM (54/56)"	"400MM (49/52) 420MM (54/56)"	"350X5MM:49/52/54 400X20MM:56"	W/SPOST	NONE	NONE
SCO Bike Axis eRIDE Evo Speed	203MM	Bosch Drive unit	None	170/175/175/175	ZS55/28.6 | ZS55/40 1-1/8"- 1.5" ACBearing	60	760	"31.6X350MM (S/M) 31.6X400MM (L/XL)"	34.9MM	NONE	NONE
SCO Bike Axis eRIDE Evo	203MM	Bosch Drive unit	None	170/175/175/175	ZS55/28.6 | ZS55/40 1-1/8"- 1.5" ACBearing	60	760	"31.6X350MM (S/M) 31.6X400MM (L/XL)"	34.9MM	NONE	NONE
SCO Bike Silence eRIDE Evo Speed	203MM	Bosch Drive unit	None	170/175/175/175	ZS55/28.6 | ZS55/40 1-1/8"- 1.5" ACBearing	95	680	"31.6X350MM (S/M) 31.6X400MM (L/XL)"	34.9MM	NONE	NONE
SCO Bike Silence eRIDE 10 Men Speed	203MM	Bosch Drive unit	None	170/175/175/175	ZS55/28.6 | ZS55/40 1-1/8"- 1.5" ACBearing	95	680	"31.6X350MM (S/M) 31.6X400MM (L/XL)"	34.9MM	NONE	NONE
SCO Bike Silence eRIDE 10 Lady Speed	203MM	Bosch Drive unit	None	170/175/175/175	ZS55/28.6 | ZS55/40 1-1/8"- 1.5" ACBearing	95	680	"31.6X350MM (S/M) 31.6X400MM (L/XL)"	34.9MM	NONE	NONE
SCO Bike Silence eRIDE 20 Men Speed	203MM	Bosch Drive unit	None	170/175/175/175	ZS55/28.6 | ZS55/40 1-1/8"- 1.5" ACBearing	95	680	"31.6X350MM (S/M) 31.6X400MM (L/XL)"	34.9MM	NONE	NONE

	Max Rotor Size	BB-spec	F.Derailleur spec	Crankarm	Headset	Stem Length	Bar Width	Seatpost	Seatpost Clamp	Rear Shock (e2e)	Hardware Shock
SCO Bike Silence eRIDE 20 Lady Speed	203MM	Bosch Drive unit	None	170/175/175/175	ZS55/28.6 | ZS55/40 1-1/8"- 1.5" ACBearing	95	680	"31.6X350MM (S/M) 31.6X400MM (L/XL)"	34.9MM	NONE	NONE
SCO Bike Silence eRIDE 30 Men	203MM	Bosch Drive unit	None	170/175/175/175	ZS55/28.6 | ZS55/40 1-1/8"- 1.5" ACBearing	95	680	"31.6X350MM (S/M) 31.6X400MM (L/XL)"	34.9MM	NONE	NONE
SCO Bike Silence eRIDE 30 Lady	203MM	Bosch Drive unit	None	170/175/175/175	ZS55/28.6 | ZS55/40 1-1/8"- 1.5" ACBearing	95	680	"31.6X350MM (S/M) 31.6X400MM (L/XL)"	34.9MM	NONE	NONE
SCO Bike Aspect eRIDE 910	203	NONE	NONE	165	43,5*49,8	50/60/70	740	31.6 / 350	34.9	NONE	NONE
SCO Bike Aspect eRIDE 920 black	203	NONE	NONE	165	43,5*49,8	50/60/70	720	31.6 / 350	34.9	NONE	NONE
SCO Bike Aspect eRIDE 920 black US	203	NONE	NONE	165	43,5*49,8	50/60/70	720	31.6 / 350	34.9	NONE	NONE
SCO Bike Aspect eRIDE 920 orange	203	NONE	NONE	165	43,5*49,8	50/60/70	720	31.6 / 350	34.9	NONE	NONE
SCO Bike Aspect eRIDE 930	203	NONE	NONE	165	43,5*49,8	50/60/70	720	31.6 / 350	34.9	NONE	NONE
SCO Bike Aspect eRIDE 940	203	NONE	NONE	165	43,5*49,8	50/60/70	720	31.6 / 350	34.9	NONE	NONE

	Max Rotor Size	BB-spec	F.Derailleur spec	Crankarm	Headset	Stem Length	Bar Width	Seatpost	Seatpost Clamp	Rear Shock (e2e)	Hardware Shock
SCO Bike Aspect eRIDE 950	203	NONE	NONE	165	43,5*49,8	50/60/70	720	31.6 / 350	34.9	NONE	NONE
SCO Bike Aspect eRIDE 950 US	203	NONE	NONE	165	43,5*49,8	50/60/70	720	31.6 / 350	34.9	NONE	NONE
SCO Bike Contessa Active eRIDE 910	203	NONE	NONE	165	43,5*49,8	50/60	740	31.6 / 350	34.9	NONE	NONE
SCO Bike Contessa Active eRIDE 920	203	NONE	NONE	165	43,5*49,8	50/60	720	31.6 / 350	34.9	NONE	NONE
SCO Bike Contessa Active eRIDE 930	203	NONE	NONE	165	43,5*49,8	50/60	720	31.6 / 350	34.9	NONE	NONE
SCO Bike Axis eRIDE 10 Men	203	NONE	NONE	172.5	43,5*49,8	60	720	31.6 / 400	34.9	NONE	NONE
SCO Bike Axis eRIDE 10 Men US	203	NONE	NONE	172.5	43,5*49,8	60	720	31.6 / 400	34.9	NONE	NONE
SCO Bike Axis eRIDE 10 Lady	203	NONE	NONE	172.5	43,5*49,8	60	720	31.6 / 400	34.9	NONE	NONE
SCO Bike Axis eRIDE 10 Lady US	203	NONE	NONE	172.5	43,5*49,8	60	720	31.6 / 400	34.9	NONE	NONE

	Max Rotor Size	BB-spec	F.Derailleur spec	Crankarm	Headset	Stem Length	Bar Width	Seatpost	Seatpost Clamp	Rear Shock (e2e)	Hardware Shock
SCO Bike Axis eRIDE 20 Men	203	NONE	NONE	172.5	43,5*49,8	60	720	31.6 / 400	34.9	NONE	NONE
SCO Bike Axis eRIDE 20 Men US	203	NONE	NONE	172.5	43,5*49,8	60	720	31.6 / 400	34.9	NONE	NONE
SCO Bike Axis eRIDE 20 Lady	203	NONE	NONE	172.5	43,5*49,8	60	720	31.6 / 400	34.9	NONE	NONE
SCO Bike Axis eRIDE 20 Lady US	203	NONE	NONE	172.5	43,5*49,8	60	720	31.6 / 400	34.9	NONE	NONE
SCO Bike Sub Sport eRIDE 10 Men	180	NONE	NONE	172.5	43,5*49,8	90/110	680	31.6 / 350	34.9	NONE	NONE
SCO Bike Sub Sport eRIDE 10 Lady	180	NONE	NONE	172.5	43,5*49,8	90/110	680	31.6 / 350	34.9	NONE	NONE
SCO Bike Sub Sport eRIDE 10 USX	180	NONE	NONE	172.5	43,5*49,8	90/110	680	31.6 / 350	34.9	NONE	NONE
SCO Bike Sub Sport eRIDE 20 Men	180	NONE	NONE	172.5	43,5*49,8	90/110	680	31.6 / 350	34.9	NONE	NONE
SCO Bike Sub Sport eRIDE 20 Men US	180	NONE	NONE	172.5	43,5*49,8	90/110	680	31.6 / 350	34.9	NONE	NONE

	Max Rotor Size	BB-spec	F.Derailleur spec	Crankarm	Headset	Stem Length	Bar Width	Seatpost	Seatpost Clamp	Rear Shock (e2e)	Hardware Shock
SCO Bike Sub Sport eRIDE 20 Lady	180	NONE	NONE	172.5	43,5*49,8	90/110	680	31.6 / 350	34.9	NONE	NONE
SCO Bike Sub Sport eRIDE 20 Lady US	180	NONE	NONE	172.5	43,5*49,8	90/110	680	31.6 / 350	34.9	NONE	NONE
SCO Bike Sub Sport eRIDE 20 USX	180	NONE	NONE	172.5	43,5*49,8	90/110	680	31.6 / 350	34.9	NONE	NONE
SCO Bike Sub Sport eRIDE 20 USX US	180	NONE	NONE	172.5	43,5*49,8	90/110	680	31.6 / 350	34.9	NONE	NONE
SCO Bike Sub Tour eRIDE 10 Men	180	NONE	NONE	172.5	43,5*49,8	90/110	680	31.6 / 350	34.9	NONE	NONE
SCO Bike Sub Tour eRIDE 10 Lady	180	NONE	NONE	172.5	43,5*49,8	90/110	680	31.6 / 350	34.9	NONE	NONE
SCO Bike Sub Tour eRIDE 10 USX	180	NONE	NONE	172.5	43,5*49,8	90/110	680	31.6 / 350	34.9	NONE	NONE
SCO Bike Sub Tour eRIDE 20 Men	180	NONE	NONE	172.5	43,5*49,8	90/110	680	31.6 / 350	34.9	NONE	NONE
SCO Bike Sub Tour eRIDE 20 Lady	180	NONE	NONE	172.5	43,5*49,8	90/110	680	31.6 / 350	34.9	NONE	NONE

	Max Rotor Size	BB-spec	F.Derailleur spec	Crankarm	Headset	Stem Length	Bar Width	Seatpost	Seatpost Clamp	Rear Shock (e2e)	Hardware Shock
SCO Bike Sub Tour eRIDE 20 USX	180	NONE	NONE	172.5	43,5*49,8	90/110	680	31.6 / 350	34.9	NONE	NONE
SCO Bike Sub Tour eRIDE 30 Men	180	NONE	NONE	172.5	43,5*49,8	90/110	680	31.6 / 350	34.9	NONE	NONE
SCO Bike Sub Tour eRIDE 30 Lady	180	NONE	NONE	172.5	43,5*49,8	90/110	680	31.6 / 350	34.9	NONE	NONE
SCO Bike Sub Tour eRIDE 30 USX	180	NONE	NONE	172.5	43,5*49,8	90/110	680	31.6 / 350	34.9	NONE	NONE
SCO Bike Sub Active eRIDE Men	180	NONE	NONE	172.5	43,5*49,8	90/110	680	31.6 / 350	34.9	NONE	NONE
SCO Bike Sub Active eRIDE Men US	180	NONE	NONE	172.5	43,5*49,8	90/110	680	31.6 / 350	34.9	NONE	NONE
SCO Bike Sub Active eRIDE Lady	180	NONE	NONE	172.5	43,5*49,8	90/110	680	31.6 / 350	34.9	NONE	NONE
SCO Bike Sub Active eRIDE Lady US	180	NONE	NONE	172.5	43,5*49,8	90/110	680	31.6 / 350	34.9	NONE	NONE
SCO Bike Sub Active eRIDE USX	180	NONE	NONE	172.5	43,5*49,8	90/110	680	31.6 / 350	34.9	NONE	NONE

	Max Rotor Size	BB-spec	F.Derailleur spec	Crankarm	Headset	Stem Length	Bar Width	Seatpost	Seatpost Clamp	Rear Shock (e2e)	Hardware Shock
SCO Bike Sub Active eRIDE USX US	180	NONE	NONE	172.5	43,5*49,8	90/110	680	31.6 / 350	34.9	NONE	NONE
SCO Bike Sub Active eRIDE 10 USX rack	180	NONE	NONE	172.5	28.6	90/110	610	31.6 / 350	34.9	NONE	NONE
SCO Bike Sub Active eRIDE 20 USX rack	180	NONE	NONE	172.5	28.6	90/110	610	31.6 / 350	34.9	NONE	NONE
SCO Bike Sub Active eRIDE 30 USX rack	180	NONE	NONE	172.5	28.6	90/110	610	31.6 / 350	34.9	NONE	NONE
SCO Bike Sub Cross eRIDE 10 Men	180	NONE	NONE	172.5	43,5*49,8	105/125	680	31.6 / 350	34.9	NONE	NONE
SCO Bike Sub Cross eRIDE 10 Lady	180	NONE	NONE	172.5	43,5*49,8	105/125	680	31.6 / 350	34.9	NONE	NONE
SCO Bike Sub Cross eRIDE 10 USX	180	NONE	NONE	172.5	43,5*49,8	105/125	680	31.6 / 350	34.9	NONE	NONE
SCO Bike Sub Cross eRIDE 20 Men	180	NONE	NONE	172.5	43,5*49,8	105/125	680	31.6 / 350	34.9	NONE	NONE
SCO Bike Sub Cross eRIDE 20 Lady	180	NONE	NONE	172.5	43,5*49,8	105/125	680	31.6 / 350	34.9	NONE	NONE

	Max Rotor Size	BB-spec	F.Derailleur spec	Crankarm	Headset	Stem Length	Bar Width	Seatpost	Seatpost Clamp	Rear Shock (e2e)	Hardware Shock
SCO Bike Sub Cross eRIDE 20 USX	180	NONE	NONE	172.5	43,5*49,8	105/125	680	31.6 / 350	34.9	NONE	NONE
SCO Bike Sub Cross eRIDE 30 Men	180	NONE	NONE	172.5	43,5*49,8	105/125	680	31.6 / 350	34.9	NONE	NONE
SCO Bike Sub Cross eRIDE 30 Lady	180	NONE	NONE	172.5	43,5*49,8	105/125	680	31.6 / 350	34.9	NONE	NONE
SCO Bike Sub Cross eRIDE 30 USX	180	NONE	NONE	172.5	43,5*49,8	105/125	680	31.6 / 350	34.9	NONE	NONE
SCO Bike Roxter eRIDE 26	160	NONE	NONE	165	28.6	50	640	31.6 / 250	35	NONE	NONE
SCO Bike Roxter eRIDE 24	160	NONE	NONE	155	28.6	50	620	31.6 / 250	35	NONE	NONE

URBAN & TREKKING



SUB SPORT 10 MEN



ITEM	DESCRIPTION
200718	Headset Ritchey sem.int.11/8
250576	SYN Grips Comfort Lock-On
229733	Seatclamp 34.9mm QR Gambler 2013
264048	SCO Rim X15 disc 32H
206375	Dropout+Screw all MTB since'97 5-PAK
264484	SCO E-bike Carrier Sub Tubus 17
273041	SCO Fender Sub Curana 19 Wty
250604	SYN Kickstand 2 bolts Direct Mount

SUB SPORT 10 LADY



ITEM	DESCRIPTION
200718	Headset Ritchey sem.int.11/8
250579	SYN Grips Women Comfort Lock-On
229733	Seatclamp 34.9mm QR Gambler 2013
264048	SCO Rim X15 disc 32H
206375	Dropout+Screw all MTB since'97 5-PAK
264484	SCO E-bike Carrier Sub Tubus 17
273041	SCO Fender Sub Curana 19 Wty
250604	SYN Kickstand 2 bolts Direct Mount

SUB SPORT 20 MEN



ITEM	DESCRIPTION
200718	Headset Ritchey sem.int.11/8
250576	SYN Grips Comfort Lock-On
229733	Seatclamp 34.9mm QR Gambler 2013
264048	SCO Rim X15 disc 32H
206375	Dropout+Screw all MTB since'97 5-PAK
264484	SCO E-bike Carrier Sub Tubus 17
273041	SCO Fender Sub Curana 19 Wty
250604	SYN Kickstand 2 bolts Direct Mount

SUB SPORT 20 LADY



ITEM	DESCRIPTION
200718	Headset Ritchey sem.int.11/8
250579	SYN Grips Women Comfort Lock-On
229733	Seatclamp 34.9mm QR Gambler 2013
264048	SCO Rim X15 disc 32H
206375	Dropout+Screw all MTB since'97 5-PAK
264484	SCO E-bike Carrier Sub Tubus 17
273041	SCO Fender Sub Curana 19 Wty
250604	SYN Kickstand 2 bolts Direct Mount

SUB SPORT 30 MEN



ITEM	DESCRIPTION
200718	Headset Ritchey sem.int.11/8
250576	SYN Grips Comfort Lock-On
229733	Seatclamp 34.9mm QR Gambler 2013
264048	SCO Rim X15 disc 32H
206375	Dropout+Screw all MTB since'97 5-PAK
264484	SCO E-bike Carrier Sub Tubus 17
273041	SCO Fender Sub Curana 19 Wty
250604	SYN Kickstand 2 bolts Direct Mount

SUB SPORT 30 LADY



ITEM	DESCRIPTION
200718	Headset Ritchey sem.int.11/8
250579	SYN Grips Women Comfort Lock-On
229733	Seatclamp 34.9mm QR Gambler 2013
264048	SCO Rim X15 disc 32H
206375	Dropout+Screw all MTB since'97 5-PAK
264484	SCO E-bike Carrier Sub Tubus 17
273041	SCO Fender Sub Curana 19 Wty
250604	SYN Kickstand 2 bolts Direct Mount

SUB SPORT 40 MEN



ITEM	DESCRIPTION
200718	Headset Ritchey sem.int.11/8
250579	SYN Grips Women Comfort Lock-On
229733	Seatclamp 34.9mm QR Gambler 2013
206375	Dropout+Screw all MTB since'97 5-PAK
264484	SCO E-bike Carrier Sub Tubus 17
273041	SCO Fender Sub Curana 19 Wty
250604	SYN Kickstand 2 bolts Direct Mount

SUB SPORT 40 LADY



ITEM	DESCRIPTION
200718	Headset Ritchey sem.int.11/8
250579	SYN Grips Women Comfort Lock-On
229733	Seatclamp 34.9mm QR Gambler 2013
206375	Dropout+Screw all MTB since'97 5-PAK
264484	SCO E-bike Carrier Sub Tubus 17
273041	SCO Fender Sub Curana 19 Wty
250604	SYN Kickstand 2 bolts Direct Mount

SUB COMFORT 10 USX



ITEM	DESCRIPTION
200718	Headset Ritchey sem.int.11/8
250579	SYN Grips Women Comfort Lock-On
229733	Seatclamp 34.9mm QR Gambler 2013
242572	Seatpost Syncros 31.6 warranty
206375	Dropout+Screw all MTB since'97 5-PAK
267289	SCO Chainguard SKS chainblade Sub 18
264484	SCO E-bike Carrier Sub Tubus 17
273041	SCO Fender Sub Curana 19 Wty
250604	SYN Kickstand 2 bolts Direct Mount

SUB COMFORT 20 MEN



ITEM	DESCRIPTION
200718	Headset Ritchey sem.int.11/8
250579	SYN Grips Women Comfort Lock-On
229733	Seatclamp 34.9mm QR Gambler 2013
242572	Seatpost Syncros 31.6 warranty
206375	Dropout+Screw all MTB since'97 5-PAK
267289	SCO Chainguard SKS chainblade Sub 18
264484	SCO E-bike Carrier Sub Tubus 17
273041	SCO Fender Sub Curana 19 Wty
250604	SYN Kickstand 2 bolts Direct Mount

SUB COMFORT 20 USX



ITEM	DESCRIPTION
200718	Headset Ritchey sem.int.11/8
250579	SYN Grips Women Comfort Lock-On
229733	Seatclamp 34.9mm QR Gambler 2013
242572	Seatpost Syncros 31.6 warranty
206375	Dropout+Screw all MTB since'97 5-PAK
267289	SCO Chainguard SKS chainblade Sub 18
264484	SCO E-bike Carrier Sub Tubus 17
273041	SCO Fender Sub Curana 19 Wty
250604	SYN Kickstand 2 bolts Direct Mount

SUB CROSS 10 MEN



ITEM	DESCRIPTION
229542	Fork SF13-NCX-D-RL-SCT 700C
200718	Headset Ritchey sem.int.11/8
250576	SYN Grips Comfort Lock-On
228952	Seatclamp 34.9mm bolt Kalloy SC202
262059	SCO Rim Syncros Alex SD20 (X20) 32H
264579	SCO Hub-rep kit Formula CL-51 front
206375	Dropout+Screw all MTB since'97 5-PAK

SUB CROSS 10 LADY



ITEM	DESCRIPTION
229542	Fork SF13-NCX-D-RL-SCT 700C
200718	Headset Ritchey sem.int.11/8
250579	SYN Grips Women Comfort Lock-On
228952	Seatclamp 34.9mm bolt Kalloy SC202
262059	SCO Rim Syncros Alex SD20 (X20) 32H
264579	SCO Hub-rep kit Formula CL-51 front
206375	Dropout+Screw all MTB since'97 5-PAK

SUB CROSS 20 MEN



ITEM	DESCRIPTION
229499	Fork SF13-NEX-HLO 700C
200718	Headset Ritchey sem.int.11/8
250576	SYN Grips Comfort Lock-On
228952	Seatclamp 34.9mm bolt Kalloy SC202
262059	SCO Rim Syncros Alex SD20 (X20) 32H
264579	SCO Hub-rep kit Formula CL-51 front
206375	Dropout+Screw all MTB since'97 5-PAK

SUB CROSS 20 LADY



ITEM	DESCRIPTION
229499	Fork SF13-NEX-HLO 700C
200718	Headset Ritchey sem.int.11/8
250579	SYN Grips Women Comfort Lock-On
228952	Seatclamp 34.9mm bolt Kalloy SC202
262059	SCO Rim Syncros Alex SD20 (X20) 32H
264579	SCO Hub-rep kit Formula CL-51 front
206375	Dropout+Screw all MTB since'97 5-PAK

SUB CROSS 30 MEN



ITEM	DESCRIPTION
229499	Fork SF13-NEX-HLO 700C
200718	Headset Ritchey sem.int.11/8
250576	SYN Grips Comfort Lock-On
228952	Seatclamp 34.9mm bolt Kalloy SC202
262059	SCO Rim Syncros Alex SD20 (X20) 32H
271261	SCO Hub rep kit Form DC-19 F 19
242120	Hub rep kit Formula DC-25RQR
206375	Dropout+Screw all MTB since'97 5-PAK

SUB CROSS 30 LADY



ITEM	DESCRIPTION
229499	Fork SF13-NEX-HLO 700C
200718	Headset Ritchey sem.int.11/8
250579	SYN Grips Women Comfort Lock-On
228952	Seatclamp 34.9mm bolt Kalloy SC202
262059	SCO Rim Syncros Alex SD20 (X20) 32H
271261	SCO Hub rep kit Form DC-19 F 19
242120	Hub rep kit Formula DC-25RQR
206375	Dropout+Screw all MTB since'97 5-PAK

SUB CROSS 40 MEN



ITEM	DESCRIPTION
200718	Headset Ritchey sem.int.11/8
250576	SYN Grips Comfort Lock-On
228952	Seatclamp 34.9mm bolt Kalloy SC202
262059	SCO Rim Syncros Alex SD20 (X20) 32H
271261	SCO Hub rep kit Form DC-19 F 19
242120	Hub rep kit Formula DC-25RQR
206375	Dropout+Screw all MTB since'97 5-PAK

SUB CROSS 40 LADY



ITEM	DESCRIPTION
200718	Headset Ritchey sem.int.11/8
250579	SYN Grips Women Comfort Lock-On
228952	Seatclamp 34.9mm bolt Kalloy SC202
262059	SCO Rim Syncros Alex SD20 (X20) 32H
271261	SCO Hub rep kit Form DC-19 F 19
242120	Hub rep kit Formula DC-25RQR
206375	Dropout+Screw all MTB since'97 5-PAK

SUB CROSS 50 MEN



ITEM	DESCRIPTION
282656	SCO Fork Sub Cross 50 Men 21 Wty
200718	Headset Ritchey sem.int.11/8
250576	SYN Grips Comfort Lock-On
228952	Seatclamp 34.9mm bolt Kalloy SC202
262059	SCO Rim Syncros Alex SD20 (X20) 32H
271261	SCO Hub rep kit Form DC-19 F 19
242120	Hub rep kit Formula DC-25RQR
206375	Dropout+Screw all MTB since'97 5-PAK

SUB CROSS 50 LADY



ITEM	DESCRIPTION
282657	SCO Fork Sub Cross 50 Lady 21 Wty
200718	Headset Ritchey sem.int.11/8
250579	SYN Grips Women Comfort Lock-On
228952	Seatclamp 34.9mm bolt Kalloy SC202
262059	SCO Rim Syncros Alex SD20 (X20) 32H
271261	SCO Hub rep kit Form DC-19 F 19
242120	Hub rep kit Formula DC-25RQR
206375	Dropout+Screw all MTB since'97 5-PAK

URBAN/TREKKING WARRANTY FRAMES & TECHNICAL DATA

ITEM	FURTURE PRO FRAMES
282533	SCO Frame Sub Sport 10 Men 21 Wty
282534	SCO Frame Sub Sport 10 Lady 21 Wty
282535	SCO Frame Sub Comfort 10 USX 21 Wty
282536	SCO Frame Sub Sport 40 Men 21 Wty
285803	SCO Frame Sub Sport 40 Lady 21 Wty
282537	SCO Frame Sub Cross 10 Men 21 Wty
282538	SCO Frame Sub Cross 10 Lady 21 Wty
282525	SCO Frameset Sub Cross 50 Men 21 Wty
282526	SCO Frameset Sub Cross 50 Lady 21 Wty

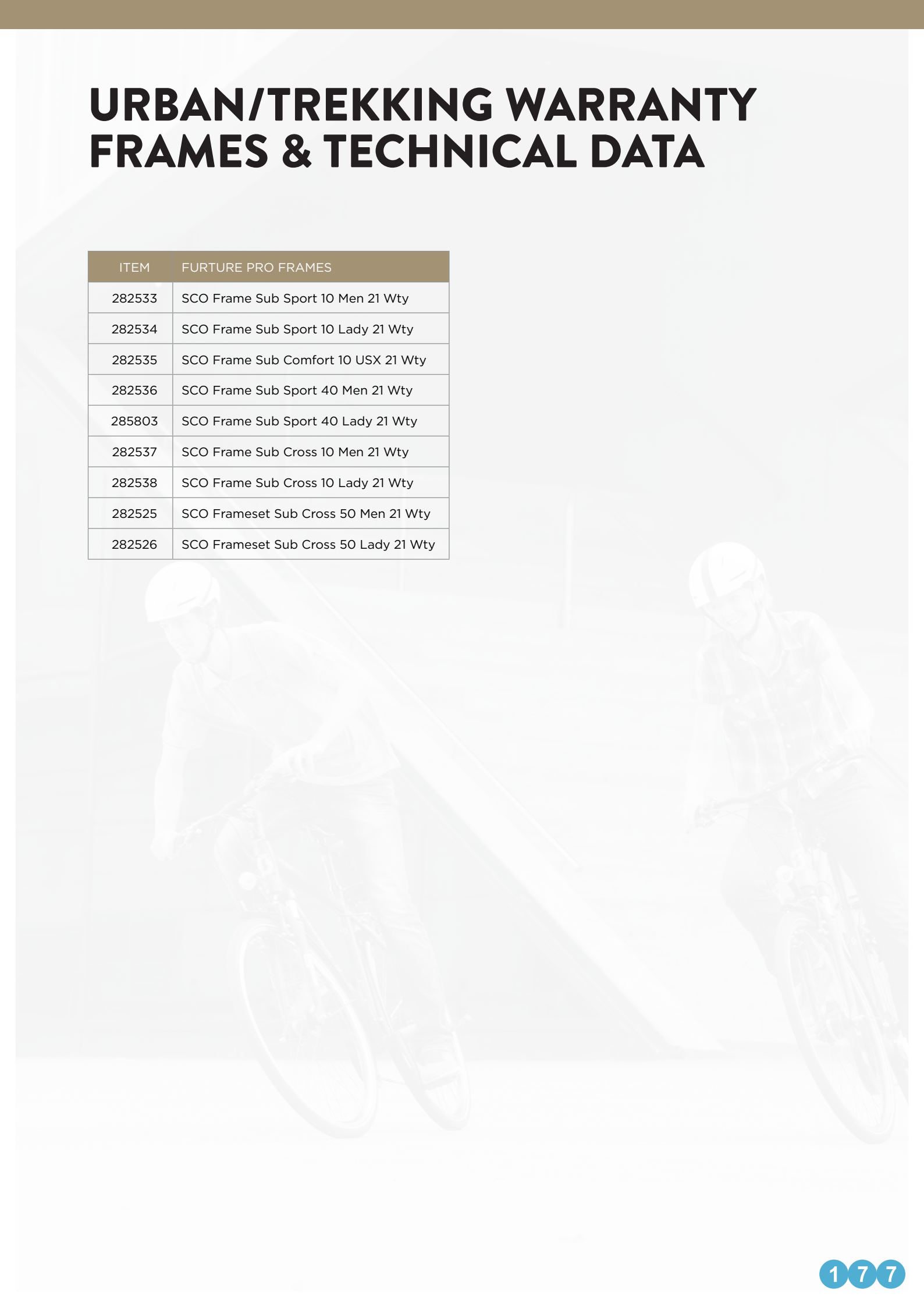

	Max Rotor Size	BB-spec	F.Derailleur spec	Crankarm	Headset	Stem Length	Bar Width	Seatpost	Seatpost Clamp
SCO Bike Sub Cross 10 Men	160MM	"Shimano BB-MT800 KBBMT800B"	"Shimano FD-T6000-L-6 KFDT6000L6LL"	"170MM (S) 175MM (M/L/XLXXL)"	1-1/8"X44X30MM	70mm(S), 80mm(M), 90mm(L), 100mm(XL/XXL)	660mm	31.6mmx350mm	34.9mm
SCO Bike Sub Cross 10 Lady	160MM	"Shimano BB-MT800 KBBMT800B"	"Shimano FD-T6000-L-6 KFDT6000L6LL"	"170MM (S) 175MM (M/L/XL)"	1-1/8"X44X30MM	60mm(S), 70mm(M), 80mm(L), 90mm(XL)	660mm	31.6mmx350mm	34.9mm
SCO Bike Sub Cross 20 Men	160MM	"Shimano BB-ES300-AK, BSA 68MM ABBES300AKB21W"	"Shimano FD-T6000-L-6 KFDT6000L6LL"	"170MM (S) 175MM (M/L/XL/XXL)"	1-1/8"X44X30MM	70mm(S), 80mm(M), 90mm(L), 100mm(XL/XXL)	660mm	31.6mmx350mm	34.9mm
SCO Bike Sub Cross 20 Lady	160MM	"Shimano BB-ES300-AK, BSA 68MM ABBES300AKB21W"	"Shimano FD-T6000-L-6 KFDT6000L6LL"	"170MM (S) 175MM (M/L/XL)"	1-1/8"X44X30MM	60mm(S), 70mm(M), 80mm(L), 90mm(XL)	660mm	31.6mmx350mm	34.9mm
SCO Bike Sub Cross 30 Men	160MM	"Shimano BB-ES300, BSA 68MM ABBES300B26 "	"Shimano FD-M370 AFDM370L6 "	"170MM (S) 175MM (M/L/XL/XXL)"	1-1/8"X44X30MM	70mm(S), 80mm(M), 90mm(L), 100mm(XL/XXL)	660mm	31.6mmx350mm	34.9mm
SCO Bike Sub Cross 30 Lady	160MM	"Shimano BB-ES300, BSA 68MM ABBES300B26 "	"Shimano FD-M370 AFDM370L6 "	"170MM (S) 175MM (M/L/XL)"	1-1/8"X44X30MM	60mm(S), 70mm(M), 80mm(L), 90mm(XL)	660mm	31.6mmx350mm	34.9mm
SCO Bike Sub Cross 40 Men	160MM	"Feimin FP-B908N 122.5mm/68mm"	"Shimano FD-M370 AFDM370L6 "	"170MM (S) 175MM (M/L/XL/XXL)"	1-1/8"X44X30MM	70mm(S), 80mm(M), 90mm(L), 100mm(XL/XXL)	660mm	31.6mmx350mm	34.9mm
SCO Bike Sub Cross 40 Lady	160MM	"Feimin FP-B908N 122.5mm/68mm"	"Shimano FD-M370 AFDM370L6 "	"170MM (S) 175MM (M/L/XL)"	1-1/8"X44X30MM	60mm(S), 70mm(M), 80mm(L), 90mm(XL)	660mm	31.6mmx350mm	34.9mm
SCO Bike Sub Cross 50 Men	160MM	"Feimin FP-B908N 122.5mm/68mm"	"Shimano FD-TY710-TS6 AFDTY710TSL6"	"170MM (S) 175MM (M/L/XL/XXL)"	1-1/8"X44X30MM	70mm(S), 80mm(M), 90mm(L), 100mm(XL/XXL)	660mm	31.6mmx350mm	34.9mm
SCO Bike Sub Cross 50 Lady	160MM	"Feimin FP-B908N 122.5mm/68mm"	"Shimano FD-TY710-TS6 AFDTY710TSL6"	"170MM (S) 175MM (M/L/XL)"	1-1/8"X44X30MM	60mm(S), 70mm(M), 80mm(L), 90mm(XL)	660mm	31.6mmx350mm	34.9mm
SCO Bike Sub Sport 10 Men	160	KBBMT800B 68/73	KFDT6000L6ML / 34.9	175	28.6	90/110	680	31.6 / 350	34.9

	Max Rotor Size	BB-spec	F.Derailleur spec	Crankarm	Headset	Stem Length	Bar Width	Seatpost	Seatpost Clamp
SCO Bike Sub Sport 10 Lady	160	KBBMT800B 68/73	KFDT6000L6ML / 34.9	175	28.6	90/110	680	31.6 / 350	34.9
SCO Bike Sub Sport 20 Men	160	included in chain-wheel	KFDT6000L6ML / 34.9	175	28.6	90/110	680	31.6 / 350	34.9
SCO Bike Sub Sport 20 Lady	160	included in chain-wheel	KFDT6000L6ML / 34.9	175	28.6	90/110	680	31.6 / 350	34.9
SCO Bike Sub Sport 30 Men	160	ABBUN101B23X 68x122.5	AFDM370M6 / 31.8	170	28.6	90/110	680	31.6 / 350	34.9
SCO Bike Sub Sport 30 Lady	160	ABBUN101B23X 68x122.5	AFDM371M6 / 31.8	170	28.6	90/110	680	31.6 / 350	34.9
SCO Bike Sub Sport 40 Men	none	VP-BC73C / 68x122.5	AFDTY510TSM6 / 31.8	175	28.6	90/110	680	31.6 / 350	34.9
SCO Bike Sub Sport 40 Lady	none	VP-BC73C / 68x122.5	AFDTY510TSM6 / 31.8	175	28.6	90/110	680	31.6 / 350	34.9
SCO Bike Sub Comfort 10 USX	none	VP-BC73C / 68x122.5	AFDTY710TSM3 / 31.8	175	28.6	110	640	31.6 / 350	34.9
SCO Bike Sub Comfort 20 Men	none	VP-BC73C / 68x122.5	AFDTY510TSM6 / 31.8	175	28.6	90/110	610	31.6 / 350	34.9
SCO Bike Sub Comfort 20 USX	none	VP-BC73C / 68x122.5	AFDTY510TSM6 / 31.8	175	28.6	90/110	610	31.6 / 350	34.9

FUTURE PRO



For the Spark Pro / Spark / Scale Future pro please consult previous years techbook and MTB section. The below chapter only contains information regarding the Ransom Future pro.

While the Ransom FP shares the same platform as the adult Ransom please be aware there are differences.

Technical Specs:

Seatpost	31.6
Seatpost Clamp	34.9
Travel	130mm
Shock length	165mm
Shock stroke	45mm
Hardware mainframe	Trunnion
Hardware linkage	8x30mm
BB housing	BSA 41x73mm
Chainring/crank size	24' - 32T, 127mm / 26'- 32T, 140mm
Rotor size	F- 180mm R-160mm
Max tyre width	24'/ 26'- 2.4' (61mm)

(⚠Tyre sizes often vary from brand to brand, always ensure the tyre clearance is adequate when replacing tyres at any place of the wheel rotation).

Hanger & Axle:

The Ransom FP uses Sram UDH system, these hangers are not specific to Scott and can also be purchased from your local Sram agent.



285813 SCO Axle Rear UDH 12x148mm UDH 21



286000 SCO Dropout Sram UDH

Rear Brake:

The caliper mount is a standard post mount on the seatstay.

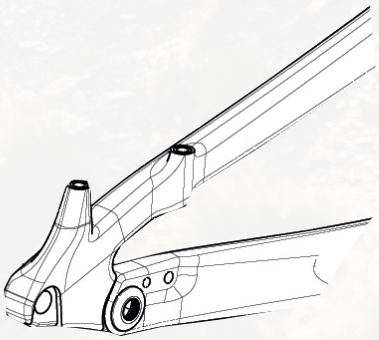

Front Drive:

⚠The maximum chainring size that is recommended on the MY21 Ransom FP is 34T.

The MY21 Ransom FP is only set for X1 gear setup only, there is no option to mount a front derailleur.



⚠There is no option for a chainguard to be fitted.

Headset:

The MY21 Ransom FP uses the same headset
as the adult Ransom.

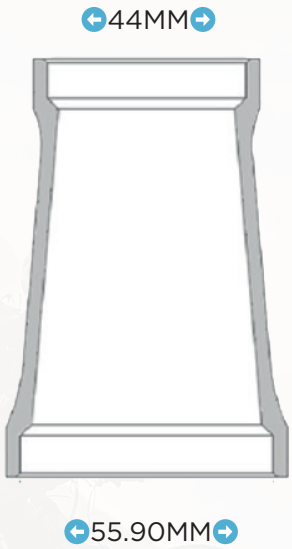

Dropper Seatposts:

The seatpost on the Future pro bikes has a drop of 80mm, this post has a rider weight limit of 40kg if the rider weight exceeds this there is a risk of the air cartridge to fail, this is not covered by warranty.

There are spare parts available for this new post-
278400 - SCO Seatpost SY drop Dunc no lever Wty ⚠ this is a warranty item only and not for sale
278730 - SCO Seatpost-Serv Air cartkit Dunc 40kg
267432 - SCO Seatpost-serv.seal kit 2.5

If the rider is above the recommended weight a replace cartridge can be source and is a charge-able item;
278729 - SCO Seatpost-Serv Air cartkit Dunc

Cable Routing:

The MY21 Ransom FP has not got the same cable guides as the Adult bikes, all cable guides are part of the frame and the only attachment is the use of cable ties as shown below.

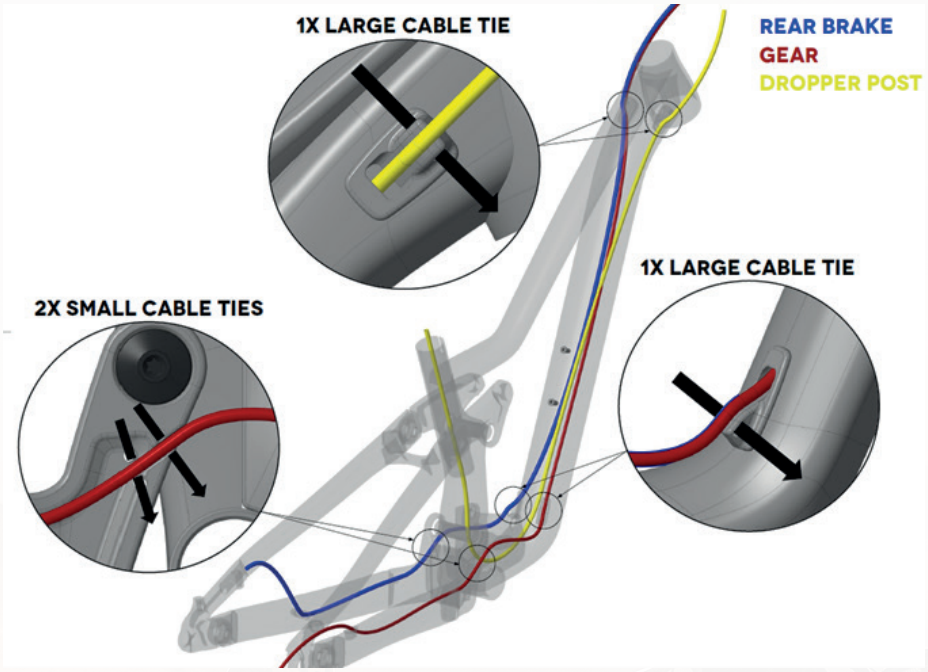

⚠Ensure all cable ties are cut neatly to ensure there are no sharp edges.

Please note that above is an example of a standard EU setup, please ensure the bike is set up as the law dictates in your country, this may require alternation from how the bike was delivered and this is solely the responsibility of whoever assembled the bike.

Shocks/suspension and pivots:

As with its bigger brother the Ransom FP compatable with 2 wheel sizes, both Ransom FP 400 and 600 are the same frame and fork. If the wheel size is ammended the rear shock position will need to be
adjusted for crank clearance.

If you are using the bike with 24” wheels this must be set to “High” mode only ⚠
The geo chip needs to be set to match the wheel size fitted to the bike, the readable text (correct way up) is relevant to the wheel.





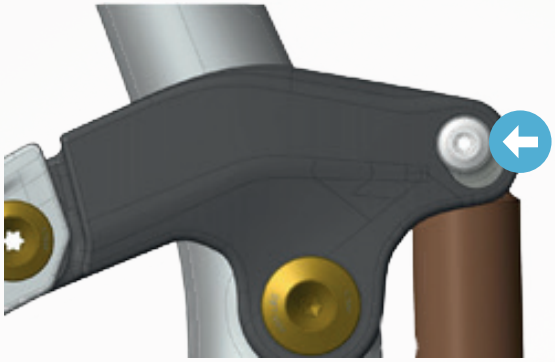

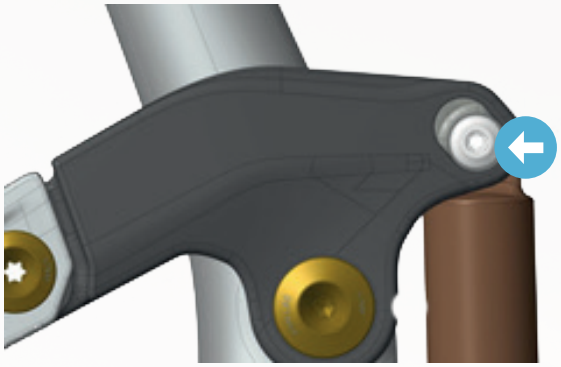

“Low mode” for 26” wheels only

“High mode” for 24” wheels only

Please ensure the geo chip is in the same position left and right sides and threadLoc with the correct torque is observed.
Failure to set the correct height for the 24” wheel may result in the pedal coming into contact with the ground when in use.

While the MY21 Ransom FP adopts the same mounting style as its bigger brother with the use of Trunnion the IGUS mounts and top shock bolts differ and are not cross compatible.

Service and spares for these shocks will be carried out by your local service agent. We will carry stock of shocks if your customer wishes to purchase a replacement, please note that these are not to cover
warranty as this will be covered by your local agent not Scott

2**85811- SCO Rear shock Ran F-Pro X-Fusion 21 Wty ⚠note this is not to cover warranty**

External dimensions/Shock identification:

EYE 2 EYE 165mm

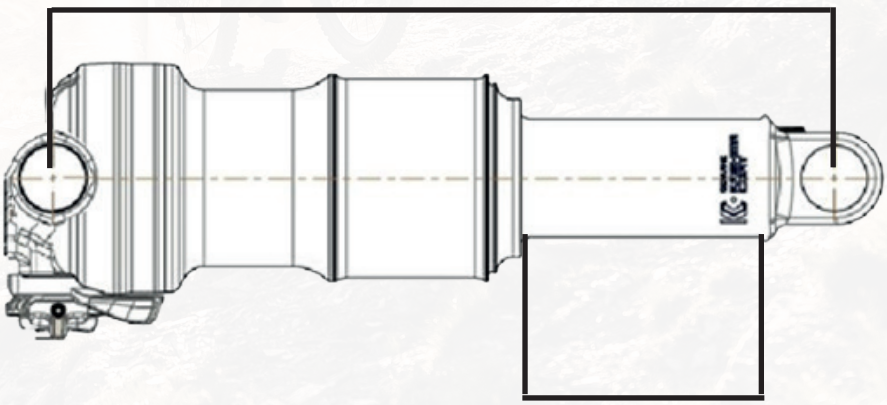

STROKE 45mm

Top shock bush is standard 30x8mm and available from your local agent in addition the Trunnion bushing and spacer are available separately from Scott.

285812-SCO Shock mount bolt kit Ran F-Pro 21



If you do not have a local agent that can help you the top bush kit is available from Scott;
266576- SCO Shock mount bush set X-Fus Gen18 Ran

Pivots and bearing:

The main pivot assembly is replaced in a similar way as the Adult Ransom but there are some slight
differences, ⚠Take note of the bearing pivot spacer position. (10Nm With Threadlock)

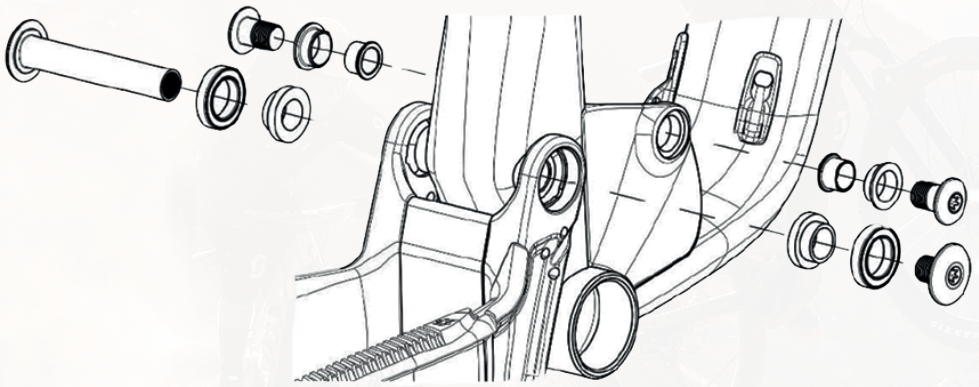

⚠Take note of the bearing pivot spacer position with the step facing the bearings.
(10Nm With Threadlock)

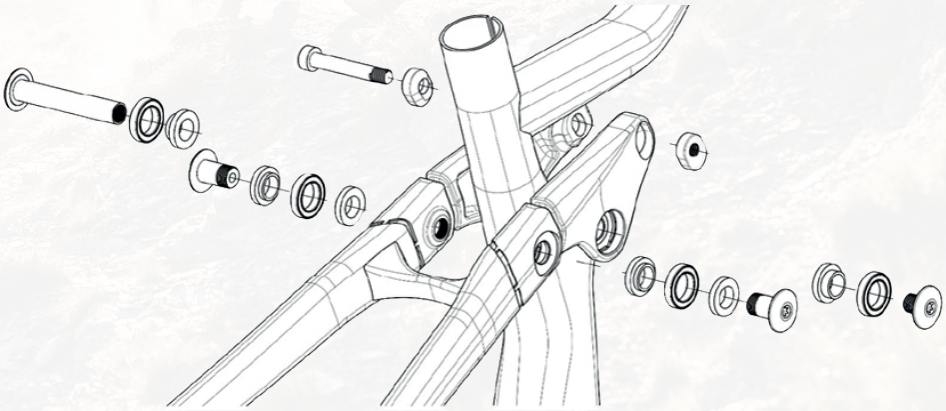

⚠Take note of the bearing pivot spacer position with the step facing the bearings.
(10Nm With Threadlock)

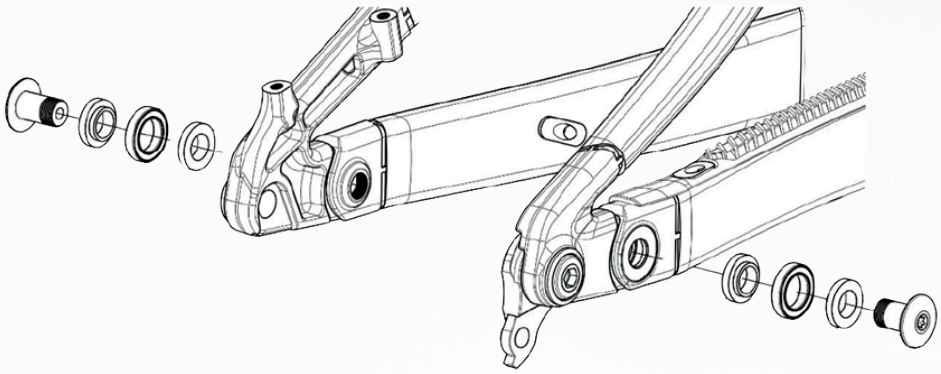

⚠Take note of the bearing pivot spacer position with the step facing the bearings.
(10Nm With Threadlock)





The above kit is available as:
285814 - SCO Swingarm rep kit Ransom F-Pro 21
285812 - SCO Shock mount bolt kit Ran F-Pro 21

If you have a bike where the pivots and spacers are ok and the issue is just the bearings these can be sourced form your local bearing services, the bearings are-X8 61802-2RS (15x24x5mm)



286001 SCO Chainstay Protectoor Kit Ran F-Pro 21

RANSOM 600



ITEM	DESCRIPTION
286000	SCO Dropout Sram UDH 21
285814	SCO Swingarm rep kit Ransom F-Pro 21
265586	SYN Headset ZS44/28.6 - ZS56/40
275465	SYN Grips Kids
283361	SCO Crankset Prowheel Ran F-Pro 32T 21
262070	SCO Seatpost-Remote syncros 2.0
278400	SCO Seatpost SY drop Dunc no lever Wty
278730	SCO Seatpost-Serv Air cartkit Dunc 40kg
285816	SCO Front wheel Ransom F-Pro 21 Wty
285817	SCO Rear wheel Ransom F-Pro 21 Wty

RANSOM 400



ITEM	DESCRIPTION
286000	SCO Dropout Sram UDH 21
285814	SCO Swingarm rep kit Ransom F-Pro 21
265586	SYN Headset ZS44/28.6 - ZS56/40
275465	SYN Grips Kids
283361	SCO Crankset Prowheel Ran F-Pro 32T 21
262070	SCO Seatpost-Remote syncros 2.0
278400	SCO Seatpost SY drop Dunc no lever Wty
278730	SCO Seatpost-Serv Air cartkit Dunc 40kg
285816	SCO Front wheel Ransom F-Pro 21 Wty
285817	SCO Rear wheel Ransom F-Pro 21 Wty

SPARK 700



ITEM	DESCRIPTION
254092	SCO Dropout hanger boost TA12 alloy 17
271335	SCO Cableguide Scale/Spark H-tube uni 17
254117	SCO Cableguide Spark D/T carb/alu out 17
254114	SCO Cableguide Spa/Sca17/Gen18 out
254115	SCO Cableguide Spa17/Gen18 C-stay rub
254118	SCO Cableguide Trunnion Fox Nude 17
254089	SCO FD blank Spa/Sca17/Gen18
254087	SCO Front derailleur mount Spa17/Gen18
267285	SCO Linkage bar Spark alloy 120mm 18
266573	SCO Igus bush set Spark/Genius/E- 18
262039	SCO Swingarm rep kit Spark 120mm 17
262044	SCO Shock mount hardware Spark 17
266600	SCO Shock mount bush set FOX Spark 17
254121	SCO Cableguide noodle Trunnion nude
263379	SCO Rear Shock Spark 120mm FoxFltPerf 17
228441	SYN Headset ZS44/28.6 - ZS55/40
262082	SCO Headset spacers+cap Syncros 1.5 MTB
250574	SYN Grips Pro, Lock-On
262631	SCO Twinloc lever down clamp/seatpost 17
223309	SCO Seatclamp 34.9mm CrMo bolt
278400	SCO Seatpost SY drop Dunc no lever Wty
278730	SCO Seatpost-Serv Air cartkit Dunc 40kg
277032	SCO Axle RWS rear 148x12 boost plug T30
252416	SCO Rim Syncros Alex X25 27.5 32H
254101	SCO Chainguide set Spark 17

SPARK 600



ITEM	DESCRIPTION
254094	SCO Dropout hanger boost Q/R no DM 17
266587	SCO Cableguide set Sca/Spa/Gen H-tube 18
254117	SCO Cableguide Spark D/T carb/alu out 17
254114	SCO Cableguide Spa/Sca17/Gen18 out
254115	SCO Cableguide Spa17/Gen18 C-stay rub
271242	SCO Cableguide Trunnion blank
254089	SCO FD blank Spa/Sca17/Gen18
254087	SCO Front derailleur mount Spa17/Gen18
267285	SCO Linkage bar Spark alloy 120mm 18
266573	SCO Igus bush set Spark/Genius/E- 18
262039	SCO Swingarm rep kit Spark 120mm 17
262044	SCO Shock mount hardware Spark 17
266001	SCO Shock mount bush set X-Fus. Spark 17
228441	SYN Headset ZS44/28.6 - ZS55/40
275465	SYN Grips Kids
229733	SCO Seatclamp 34.9mm QR Gambler
242572	SCO Seatpost Syncros 31.6 warranty
277036	SCO Hub rep kit Form CL-2241 Shim R 20
254101	SCO Chainguide set Spark 17

SCALE 710



ITEM	DESCRIPTION
206375	SCO Dropout+Screw all MTB since'97 5-PAK
228441	SYN Headset ZS44/28.6 - ZS55/40
275465	SYN Grips Kids
239172	Rideloc lever integ clamp
229733	SCO Seatclamp 34.9mm QR Gambler
242572	SCO Seatpost Syncros 31.6 warranty
264579	SCO Hub Rep-kit Formula CL-51 Front
285815	SCO Hub rep kit DC-3248 R SH 21
262059	SCO Rim Syncros Alex SD20 (X20) 32H

SCALE RC 600



ITEM	DESCRIPTION
282603	SCO Fork Scale RC 600 Future Pro 21 Wty
233961	SCO Dropout Cont 660-650 ScalJr 20-24
228440	SYN Headset ZS44/28.6 - ZS44/30
275465	SYN Grips Kids
283362	SCO Crankset Prowheel Sca F-pro 32T 21
228950	SCO Seatclamp 31.8mm QR Kalloy XC64

SCALE RC 400 PRO



ITEM	DESCRIPTION
233961	SCO Dropout Cont 660-650 ScalJr 20-24
228440	SYN Headset ZS44/28.6 - ZS44/30
275465	SYN Grips Kids
283362	SCO Crankset Prowheel Sca F-pro 32T 21
228950	SCO Seatclamp 31.8mm QR Kalloy XC64

SCALE RC 400



ITEM	DESCRIPTION
282604	SCO Fork Scale RC 400 Future Pro 21 Wty
233961	SCO Dropout Cont 660-650 ScalJr 20-24
228440	SYN Headset ZS44/28.6 - ZS44/30
275465	SYN Grips Kids
283362	SCO Crankset Prowheel Sca F-pro 32T 21
228950	SCO Seatclamp 31.8mm QR Kalloy XC64

SCALE RC 200



ITEM	DESCRIPTION
285807	SCO Fork Scale RC 200 Future Pro 21 Wty
233961	SCO Dropout Cont 660-650 ScalJr 20-24
228440	SYN Headset ZS44/28.6 - ZS44/30
275465	SYN Grips Kids
283362	SCO Crankset Prowheel Sca F-pro 32T 21
228950	SCO Seatclamp 31.8mm QR Kalloy XC64

GRAVEL 400



ITEM	DESCRIPTION
276465	SCO Fork Speedster Gravel 24 20 Wty
266778	SCO Dropout Hanger Speedster 18
200718	SCO Headset Ritchey sem.int.11/8
277376	BGM Hub Repkit Front Formula CL-25 20
262048	SCO Hub-rep kit Sync. Form CL-25/CL2611

FUTURE PRO WARRANTY FRAMES & TECHNICAL DATA

ITEM	FURTURE PRO FRAMES
282430	SCO Frame Ramson Future Pro 21 Wty
285789	SCO Frame Spark 600 F-Pro 21 Wty
285790	SCO Frame Spark 700 F-Pro 21 Wty
282431	SCO Frameset Scale RC 600 Future Pro 21
282432	SCO Frameset Scale RC 400 Future Pro 21

	Max Rotor Size	BB-spec	F.Derailleur spec	Crankarm	Headset	Stem Length	Bar Width	Seatpost	Seatpost Clamp	Rear Shock (e2e)	Hardware Shock
SCO Bike Spark 700	160MM	BB DUB PRESS-FIT MTB 92 (00.6418.011.001)	NONE	155MM	SYNCROS HS OE 1-1/8"-1.5" 55-61MM	50MM	680MM	31.6X318MM	34.9MM	165x45MM	20x10
SCO Bike Spark 600	180MM	BB DUB PRESS-FIT MTB 92 (00.6418.011.001)	NONE	155MM	SYNCROS HS OE 1-1/8"-1.5" 55-61MM	50MM	640MM	31.6X350MM	34.9MM	165x45MM	20x10
SCO Bike Contessa Scale 940 (CN)	180MM	(ABBMT500PA)BB-MT500-PA	NONE	170MM:S/M 175MM:L	FP-H868P Syncros 1-1/8"- 1.5" 50-62mm	50MM:S 60MM:M 70MM:L	700MM	31.6X400MM	35MM	NONE	NONE
SCO Bike Contessa Scale 950 (CN)	180MM	BB DUB PRESS-FIT MTB 89.5 (00.6418.011.000)	NONE	170MM:S/M 175MM:L	FP-H868P Syncros 1-1/8"- 1.5" 50-62mm	50MM:S 60MM:M 70MM:L	700MM	31.6X400MM	35MM	NONE	NONE
SCO Bike Scale 710 (CN)	160MM	BB DUB PRESS-FIT MTB 89.5 (00.6418.011.000)	NONE	155MM:XS 165MM:S	VP-J203SE TAPERED 1-1/2 TO 1-1/8 H9.1	50MM	680MM	31.6X400MM	35MM	NONE	NONE
SCO Bike Scale RC 600	160MM	"Feimin FP-B908L 122.5mm/68mm"	NONE	152MM	1-1/8"x50x44x30MM	50mm	580MM	27.2x300MM	31.8mm	NONE	NONE
SCO Bike Ransom 600	"FRONT: 180MM REAR: 160MM"	BSA73mm Included in crank set	NONE	140MM	1-1/8"~1.5"X44X56X-39.8MM	50mm	600mm	31.6mm x 318mm	34.9mm	165x45	54x10/ 30x8
SCO Bike Ransom 400	"FRONT: 180MM REAR: 160MM"	BSA73mm Included in crank set	NONE	127MM	1-1/8"~1.5"X44X56X-39.8MM	50mm	600mm	31.6mm x 318mm	34.9mm	165x45	54x10/ 30x8
SCO Bike Scale RC 400 Pro	160MM	"Feimin FP-B908L 122.5mm/68mm"	NONE	140MM	1-1/8"x50x44x30MM	50mm	580MM	27.2x300MM	31.8mm	NONE	NONE
SCO Bike Scale RC 400	160MM	"Feimin FP-B908L 122.5mm/68mm"	NONE	140MM	1-1/8"x50x44x30MM	50mm	580MM	27.2x300MM	31.8mm	NONE	NONE
SCO Bike Scale RC 200	160MM	"Feimin FP-B908L 113mm/68mm"	NONE	127MM	1-1/8"x50x44x30MM	50mm	560mm	27.2mmx250mm	31.8mm	NONE	NONE

YOUTH/KIDS

SCO Bike Scale 26 disc	ITEM	DESCRIPTION
	206375	SCO Dropout+Screw all MTB since'97 5-PAK
	200718	SCO Headset Ritchey sem.int.11/8
	275465	SYN Grips Kids
	229733	SCO Seatclamp 34.9mm QR Gambler
	242572	SCO Seatpost Syncros 31.6 warranty

SCO Bike Scale 24 rigid	ITEM	DESCRIPTION
	282605	SCO Fork Scale 24 rigid 21 Wty
	233961	SCO Dropout Cont 660-650 ScalJr 20-24
	200718	SCO Headset Ritchey sem.int.11/8
	271298	SCO Stem protector JR
	210703	Brake lever KID 3-Finger blk/silv 1size
	228950	SCO Seatclamp 31.8mm QR Kalloy XC64
	271261	SCO Hub rep kit Form DC-19 F 19
	242120	SCO Hub rep kit Formula DC-25RQR
	216325	SCO Rim Alex C-1000 32H 24"
	282336	SCO Wheel 24" disc brake FW
	282337	SCO Wheel 24" Cassette 8s disc RW
	277044	SCO tire Kenda Booster 24x2.4 Wty
	283362	SCO Crankset Prowheel Sca F-pro 32T 21

SCO Bike Scale 24 disc	ITEM	DESCRIPTION
	233961	SCO Dropout Cont 660-650 ScalJr 20-24
	200718	SCO Headset Ritchey sem.int.11/8
	271298	SCO Stem protector JR
	210703	Brake lever KID 3-Finger blk/silv 1size
	228950	SCO Seatclamp 31.8mm QR Kalloy XC64
	271261	SCO Hub rep kit Form DC-19 F 19
	242120	SCO Hub rep kit Formula DC-25RQR
	216325	SCO Rim Alex C-1000 32H 24"
	282336	SCO Wheel 24" disc brake FW
	283362	SCO Crankset Prowheel Sca F-pro 32T 21
	282337	SCO Wheel 24" Cassette 8s disc RW

SCO Bike Scale 24	ITEM	DESCRIPTION
	233961	SCO Dropout Cont 660-650 ScalJr 20-24
	200718	SCO Headset Ritchey sem.int.11/8
	271298	SCO Stem protector JR
	210703	Brake lever KID 3-Finger blk/silv 1size
	200609	Brake Lee-Chi 209P Kids bk
	228950	SCO Seatclamp 31.8mm QR Kalloy XC64
	216325	SCO Rim Alex C-1000 32H 24"
	279066	SCO Wheel 24" disc/V brake F
	279069	SCO Wheel 24" Cassette disc/V brake R
	283362	SCO Crankset Prowheel Sca F-pro 32T 21

SCO Bike Scale 20 rigid	ITEM	DESCRIPTION
	282606	SCO Fork Scale 20 rigid 21 Wty
	233961	SCO Dropout Cont 660-650 ScalJr 20-24
	200718	SCO Headset Ritchey sem.int.11/8
	271298	SCO Stem protector JR
	210703	Brake lever KID 3-Finger blk/silv 1size
	200609	Brake Lee-Chi 209P Kids bk
	228950	SCO Seatclamp 31.8mm QR Kalloy XC64
	271261	SCO Hub rep kit Form DC-19 F 19
	242120	SCO Hub rep kit Formula DC-25RQR
	279067	SCO Wheel 20" disc brake F
	279070	SCO Wheel 20" Cassette disc brake R
	277043	SCO tire Kenda Booster 20x2.4 Wty

SCO Bike Scale 20	ITEM	DESCRIPTION
	233961	SCO Dropout Cont 660-650 ScalJr 20-24
	200718	SCO Headset Ritchey sem.int.11/8
	271298	SCO Stem protector JR
	210703	Brake lever KID 3-Finger blk/silv 1size
	200609	Brake Lee-Chi 209P Kids bk
	228950	SCO Seatclamp 31.8mm QR Kalloy XC64
	279192	SCO Rim Alex C-1000 32h 20"
	279068	SCO Wheel 20" V brake F
	279071	SCO Wheel 20" MF V brake R

SCO Bike Roxter 26 disc	ITEM	DESCRIPTION
	206375	SCO Dropout+Screw all MTB since'97 5-PAK
	200718	SCO Headset Ritchey sem.int.11/8
	275465	SYN Grips Kids
	229733	SCO Seatclamp 34.9mm QR Gambler
	242572	SCO Seatpost Syncros 31.6 warranty
	271261	SCO Hub rep kit Form DC-19 F 19
	242120	SCO Hub rep kit Formula DC-25RQR

SCO Bike Roxter 26	ITEM	DESCRIPTION
	277538	SCO Fork Zoom 565 V-brake Wty
	206375	SCO Dropout+Screw all MTB since'97 5-PAK
	200718	SCO Headset Ritchey sem.int.11/8
	275465	SYN Grips Kids
	210703	Brake lever KID 3-Finger blk/silv 1size
	229733	SCO Seatclamp 34.9mm QR Gambler
	242572	SCO Seatpost Syncros 31.6 warranty

SCO Bike Roxter 24	ITEM	DESCRIPTION
	282609	SCO Fork Roxter 24 rigid 21 Wty
	233961	SCO Dropout Cont 660-650 ScalJr 20-24
	200718	SCO Headset Ritchey sem.int.11/8
	271298	SCO Stem protector JR
	210703	Brake lever KID 3-Finger blk/silv 1size
	228950	SCO Seatclamp 31.8mm QR Kalloy XC64
	271261	SCO Hub rep kit Form DC-19 F 19
	242120	SCO Hub rep kit Formula DC-25RQR
	283362	SCO Crankset Prowheel Sca F-pro 32T 21
	266260	SCO Tire Scale JR+ 24

SCO Bike Roxter 20	ITEM	DESCRIPTION
	282610	SCO Fork Roxter 20 rigid 21 Wty
	233961	SCO Dropout Cont 660-650 ScalJr 20-24
	200718	SCO Headset Ritchey sem.int.11/8
	271298	SCO Stem protector JR
	210703	Brake lever KID 3-Finger blk/silv 1size
	228950	SCO Seatclamp 31.8mm QR Kalloy XC64
	271261	SCO Hub rep kit Form DC-19 F 19
	242120	SCO Hub rep kit Formula DC-25RQR
	266261	SCO Tire Scale JR+ 20

SCO Bike Contessa 26 disc	ITEM	DESCRIPTION
	206375	SCO Dropout+Screw all MTB since'97 5-PAK
	200718	SCO Headset Ritchey sem.int.11/8
	275465	SYN Grips Kids
	229733	SCO Seatclamp 34.9mm QR Gambler
	242572	SCO Seatpost Syncros 31.6 warranty
	271261	SCO Hub rep kit Form DC-19 F 19
	242120	SCO Hub rep kit Formula DC-25RQR

SCO Bike Contessa 26	ITEM	DESCRIPTION
	277538	SCO Fork Zoom 565 V-brake Wty
	206375	SCO Dropout+Screw all MTB since'97 5-PAK
	200718	SCO Headset Ritchey sem.int.11/8
	275465	SYN Grips Kids
	210703	Brake lever KID 3-Finger blk/silv 1size
	200609	Brake Lee-Chi 209P Kids bk
	229733	SCO Seatclamp 34.9mm QR Gambler
	242572	SCO Seatpost Syncros 31.6 warranty

SCO Bike Contessa 24 rigid	ITEM	DESCRIPTION
	282607	SCO Fork Contessa 24 rigid 21 Wty
	233961	SCO Dropout Cont 660-650 ScalJr 20-24
	200718	SCO Headset Ritchey sem.int.11/8
	271298	SCO Stem protector JR
	210703	Brake lever KID 3-Finger blk/silv 1size
	228950	SCO Seatclamp 31.8mm QR Kalloy XC64
	271261	SCO Hub rep kit Form DC-19 F 19
	242120	SCO Hub rep kit Formula DC-25RQR
	216325	SCO Rim Alex C-1000 32H 24"
	282336	SCO Wheel 24" disc brake FW
	282337	SCO Wheel 24" Cassette 8s disc RW
	283362	SCO Crankset Prowheel Sca F-pro 32T 21

SCO Bike Contessa 24 disc	ITEM	DESCRIPTION
	233961	SCO Dropout Cont 660-650 ScalJr 20-24
	200718	SCO Headset Ritchey sem.int.11/8
	271298	SCO Stem protector JR
	210703	Brake lever KID 3-Finger blk/silv 1size
	228950	SCO Seatclamp 31.8mm QR Kalloy XC64
	271261	SCO Hub rep kit Form DC-19 F 19
	242120	SCO Hub rep kit Formula DC-25RQR
	216325	SCO Rim Alex C-1000 32H 24"
	282336	SCO Wheel 24" disc brake FW
	282337	SCO Wheel 24" Cassette 8s disc RW
	283362	SCO Crankset Prowheel Sca F-pro 32T 21

SCO Bike Contessa 24	ITEM	DESCRIPTION
	233961	SCO Dropout Cont 660-650 ScalJr 20-24
	200718	SCO Headset Ritchey sem.int.11/8
	271298	SCO Stem protector JR
	210703	Brake lever KID 3-Finger blk/silv 1size
	200609	Brake Lee-Chi 209P Kids bk
	228950	SCO Seatclamp 31.8mm QR Kalloy XC64
	216325	SCO Rim Alex C-1000 32H 24"
	279066	SCO Wheel 24" disc/V brake F
	283362	SCO Crankset Prowheel Sca F-pro 32T 21

SCO Bike Contessa 20 rigid	ITEM	DESCRIPTION
	282608	SCO Fork Contessa 20 rigid 21 Wty
	233961	SCO Dropout Cont 660-650 ScalJr 20-24
	200718	SCO Headset Ritchey sem.int.11/8
	271298	SCO Stem protector JR
	210703	Brake lever KID 3-Finger blk/silv 1size
	228950	SCO Seatclamp 31.8mm QR Kalloy XC64
	271261	SCO Hub rep kit Form DC-19 F 19
	242120	SCO Hub rep kit Formula DC-25RQR
	279067	SCO Wheel 20" disc brake F
	279970	SCO Wheel 20" Cassette disc brake R
	277043	SCO tire Kenda Booster 20x2.4 Wty

SCO Bike Contessa 20	ITEM	DESCRIPTION
	233961	SCO Dropout Cont 660-650 ScalJr 20-24
	200718	SCO Headset Ritchey sem.int.11/8
	271298	SCO Stem protector JR
	210703	Brake lever KID 3-Finger blk/silv 1size
	200609	Brake Lee-Chi 209P Kids bk
	228950	SCO Seatclamp 31.8mm QR Kalloy XC64
	279192	SCO Rim Alex C-1000 32h 20"
	279068	SCO Wheel 20" V brake F
	279071	SCO Wheel 20" MF V brake R

KIDS WARRANTY FRAMES & TECHNICAL DATA

ITEM	FURTURE PRO FRAMES
282433	SCO Frameset Scale 24 Rigid 21 Wty
282434	SCO Frameset Scale 20 Rogid 21 Wty
282435	SCO Frameset Roxter 24 Rigid 21 Wty
282436	SCO Frameset Roxter 20 Rigid 21 Wty
285804	SCO Frame Scale 26 D JR 21 Wty
285805	SCO Frame Scale 24 D JR 21 Wty

	Max Rotor Size	BB-spec	F.Derailleur spec	Crankarm	Headset	Stem Length	Bar Width	Seatpost	Seatpost Clamp	Rear Shock (e2e)	Hardware Shock
SCO Bike Scale 26 disc	160MM	"Feimin FP-B908N 122.5mm/68mm"	"FD-M2020-TS AFDM2020T-SL4"	170MM	1-1/8"x50x44x30MM	50mm	640mm	31.6mmx350mm	35mm	NONE	NONE
SCO Bike Scale 24 rigid	160MM	"Feimin FP-B908L 117.5mm/68mm"	NONE	140MM	1-1/8"X49.8X44X30mm	50mm	560mm	26.8mmx300mm	31.8mm	NONE	NONE
SCO Bike Scale 24 disc yellow	160MM	"Feimin FP-B908L 115mm/68mm"	NONE	140MM	1-1/8"X49.8X44X30mm	50mm	560mm	26.8mmx300mm	31.8mm	NONE	NONE
SCO Bike Scale 24 disc cobalt blue	160MM	"Feimin FP-B908L 115mm/68mm"	NONE	140MM	1-1/8"X49.8X44X30mm	50mm	560mm	26.8mmx300mm	31.8mm	NONE	NONE
SCO Bike Scale 24	NONE	"Feimin FP-B908L 117.5mm/68mm"	NONE	140MM	1-1/8"X49.8X44X30mm	50mm	560mm	26.8mmx300mm	31.8mm	NONE	NONE
SCO Bike Scale 20 rigid	160MM	"Feimin FP-B908L 117.5mm/68mm"	NONE	127MM	1-1/8"X49.8X44X30mm	50mm	540mm	26.8mmx250mm	31.8mm	NONE	NONE
SCO Bike Scale 20 yellow	NONE	"Feimin FP-B908L 117.5mm/68mm"	NONE	127MM	1-1/8"X49.8X44X30mm	50mm	540mm	26.8mmx250mm	31.8mm	NONE	NONE
SCO Bike Scale 20 cobalt blue	NONE	"Feimin FP-B908L 117.5mm/68mm"	NONE	127MM	1-1/8"X49.8X44X30mm	50mm	540mm	26.8mmx250mm	31.8mm	NONE	NONE
SCO Bike Scale 16	NONE	"Femin FP-B908L 68/124.5mm"	NONE	102MM	1-1/8"X49.8X44X30mm	40mm	500mm	26.8mmx200mm	31.8mm	NONE	NONE
SCO Bike Gravel 400	140MM	"Feimin FP-B908L 113mm/68mm"	FD-R3000 AFDR3000BM	140MM	1-1/8"X49.8X44X30mm	50mm	360MM	27.2mmx350mm	31.8mm	NONE	NONE
SCO Bike Roxter 26 disc	160MM	"Feimin FP-B908L 122.5mm/68mm"	FD-M315-TS AFDM315TSL4	170MM	1-1/8"X49.8X44X30mm	45mm	640mm	31.6mmx350mm	35mm	NONE	NONE

	Max Rotor Size	BB-spec	F.Derailleur spec	Crankarm	Headset	Stem Length	Bar Width	Seatpost	Seatpost Clamp	Rear Shock (e2e)	Hardware Shock
SCO Bike Roxter 26	NONE	"Feimin FP-B908L 122.5mm/68mm"	FD-TY500-TS6 AFDTY500T-SL6"	150MM	1-1/8"X49.8X44X30mm	45mm	640mm	31.6mmx350mm	35mm	NONE	NONE
SCO Bike Contessa 26 disc	160MM	"Feimin FP-B908L 122.5mm/68mm"	FD-M315-TS AFDM315TSL4"	170MM	1-1/8"X49.8X44X30mm	45mm	640mm	31.6mmx350mm	35mm	NONE	NONE
SCO Bike Contessa 26	NONE	"Feimin FP-B908L 122.5mm/68mm"	FD-TY500-TS6 AFDTY500T-SL6"	150MM	1-1/8"X49.8X44X30mm	45mm	640mm	31.6mmx350mm	35mm	NONE	NONE
SCO Bike Roxter 24 raw alloy (KH)	160MM	"Feimin FP-B908L 117.5mm/68mm"	NONE	140MM	1-1/8"X49.8X44X30mm	50mm	580mm	26.8mmx300mm	31.8mm	NONE	NONE
SCO Bike Roxter 24 teal blue	160MM	"Feimin FP-B908L 117.5mm/68mm"	NONE	140MM	1-1/8"X49.8X44X30mm	50mm	580mm	26.8mmx300mm	31.8mm	NONE	NONE
SCO Bike Contessa 24 rigid	160MM	"Feimin FP-B908L 117.5mm/68mm"	NONE	140MM	1-1/8"X49.8X44X30mm	50mm	560mm	26.8mmx300mm	31.8mm	NONE	NONE
SCO Bike Contessa 24 disc	160MM	"Feimin FP-B908L 117.5mm/68mm"	NONE	140MM	1-1/8"X49.8X44X30mm	50mm	560mm	26.8mmx300mm	31.8mm	NONE	NONE
SCO Bike Contessa 24	NONE	"Feimin FP-B908L 117.5mm/68mm"	NONE	140MM	1-1/8"X49.8X44X30mm	50mm	560mm	26.8mmx250mm	31.8mm	NONE	NONE
SCO Bike Roxter 20 raw alloy	160MM	"Femin FP-B908L 68/117.5mm"	NONE	127MM	1-1/8"x49.8x44x30MM	50mm	560mm	26.8mmx250mm	31.8mm	NONE	NONE
SCO Bike Roxter 20 teal blue	160MM	"Femin FP-B908L 68/117.5mm"	NONE	127MM	1-1/8"x49.8x44x30MM	50mm	560mm	26.8mmx250mm	31.8mm	NONE	NONE
SCO Bike Contessa 20 rigid	160MM	"Femin FP-B908L 68/117.5mm"	NONE	127MM	1-1/8"x49.8x44x30MM	50mm	540mm	26.8mmx250mm	31.8mm	NONE	NONE

	Max Rotor Size	BB-spec	F.Derailleur spec	Crankarm	Headset	Stem Length	Bar Width	Seatpost	Seatpost Clamp	Rear Shock (e2e)	Hardware Shock
SCO Bike Contessa 20	NONE	"Feimin FP-B908L 117.5mm/68mm"	NONE	127MM	1-1/8"x49.8x44x30MM	50mm	540mm	26.8mmx250mm	31.8mm	NONE	NONE
SCO Bike Roxter 16	NONE	"Shun Shing SS905 51.5mm x 68mm"	NONE	89MM	1-1/8"x49.8x44x30MM	30mm	500mm	26.8mmx200mm	31.8mm	NONE	NONE
SCO Bike Contes-sa 16	NONE	"Shun Shing SS905 51.5mm x 68mm"	NONE	89MM	1-1/8"x49.8x44x30MM	30mm	500mm	26.8mmx200mm	31.8mm	NONE	NONE
SCO Bike Roxter 14	NONE	"Shun Shing SS905 51.5mm x 68mm"	NONE	89MM	1-1/8"x49.8x44x30MM	30mm	480mm	26.8mmx200mm	31.8mm	NONE	NONE
SCO Bike Contes-sa 14	NONE	"Shun Shing SS905 51.5mm x 68mm"	NONE	89MM	1-1/8"x49.8x44x30MM	30mm	480mm	26.8mmx200mm	31.8mm	NONE	NONE

REPLACEMENT PARTS



2022

Spare parts 2018	
Article number	**Description**
266332-1236006	SCO Front triangle Spark RC 900 SL 18 black/gold S
266332-1236007	SCO Front triangle Spark RC 900 SL 18 black/gold M
266332-1236008	SCO Front triangle Spark RC 900 SL 18 black/gold L
266332-1236009	SCO Front triangle Spark RC 900 SL 18 black/gold XL
266333-5024006	SCO Front triangle Spark RC 900 W/C 18 blck/sul yel S
266333-5024007	SCO Front triangle Spark RC 900 W/C 18 blck/sul yel M
266333-5024008	SCO Front triangle Spark RC 900 W/C 18 blck/sul yel L
266333-5024009	SCO Front triangle Spark RC 900 W/C 18 blck/sul yel XL
266334-5024006	SCO Front triangle Spark RC 900 Pro 18 blck/sul yel S
266334-5024007	SCO Front triangle Spark RC 900 Pro 18 blck/sul yel M
266334-5024008	SCO Front triangle Spark RC 900 Pro 18 blck/sul yel L
266334-5024009	SCO Front triangle Spark RC 900 Pro 18 blck/sul yel XL
266335-5847006	SCO Front triangle Spark RC 900 Team 18 blk/rall red S
266335-5847007	SCO Front triangle Spark RC 900 Team 18 blk/rall red M
266335-5847008	SCO Front triangle Spark RC 900 Team 18 blk/rall red L
266335-5847009	SCO Front triangle Spark RC 900 Team 18 blk/rall red XL
266336-5850006	SCO Front triangle Spark RC 900 Comp 18 blk/squ oran S
266336-5850007	SCO Front triangle Spark RC 900 Comp 18 blk/squ oran M
266336-5850008	SCO Front triangle Spark RC 900 Comp 18 blk/squ oran L
266336-5850009	SCO Front triangle Spark RC 900 Comp 18 blk/squ oran XL
266337-1236006	SCO Front triangle Spark 900 Ultimate 18 black/gold S
266337-1236007	SCO Front triangle Spark 900 Ultimate 18 black/gold M
266337-1236008	SCO Front triangle Spark 900 Ultimate 18 black/gold L
266337-1236009	SCO Front triangle Spark 900 Ultimate 18 black/gold XL
266338-3045006	SCO Front triangle Spark 900 Premium 18 carbon/grey S
266338-3045007	SCO Front triangle Spark 900 Premium 18 carbon/grey M
266338-3045008	SCO Front triangle Spark 900 Premium 18 carbon/grey L
266338-3045009	SCO Front triangle Spark 900 Premium 18 carbon/grey XL
266339-5847006	SCO Front triangle Spark 900 18 blk/rall red S
266339-5847007	SCO Front triangle Spark 900 18 blk/rall red M

266339-5847008	SCO Front triangle Spark 900 18 blk/rall red L
266339-5847009	SCO Front triangle Spark 900 18 blk/rall red XL
266340-1294006	SCO Front triangle Spark 910 18 grey/orange S
266340-1294007	SCO Front triangle Spark 910 18 grey/orange M
266340-1294008	SCO Front triangle Spark 910 18 grey/orange L
266340-1294009	SCO Front triangle Spark 910 18 grey/orange XL
266341-5024006	SCO Front triangle Spark 920 18 blck/sul yel S
266341-5024007	SCO Front triangle Spark 920 18 blck/sul yel M
266341-5024008	SCO Front triangle Spark 920 18 blck/sul yel L
266341-5024009	SCO Front triangle Spark 920 18 blck/sul yel XL
266342-0001006	SCO Front triangle Spark 700 Ultimate 18 black S
266342-0001007	SCO Front triangle Spark 700 Ultimate 18 black M
266342-0001008	SCO Front triangle Spark 700 Ultimate 18 black L
266342-0001009	SCO Front triangle Spark 700 Ultimate 18 black XL
266343-5850006	SCO Front triangle Spark 700 Tuned 18 blk/squ oran S
266343-5850007	SCO Front triangle Spark 700 Tuned 18 blk/squ oran M
266343-5850008	SCO Front triangle Spark 700 Tuned 18 blk/squ oran L
266343-5850009	SCO Front triangle Spark 700 Tuned 18 blk/squ oran XL
266344-1454006	SCO Front triangle Spark 710 18 blue/orange S
266344-1454007	SCO Front triangle Spark 710 18 blue/orange M
266344-1454008	SCO Front triangle Spark 710 18 blue/orange L
266344-1454009	SCO Front triangle Spark 710 18 blue/orange XL
266345-0001006	SCO Front triangle Genius 700 Ultimate18 black S
266345-0001007	SCO Front triangle Genius 700 Ultimate18 black M
266345-0001008	SCO Front triangle Genius 700 Ultimate18 black L
266345-0001009	SCO Front triangle Genius 700 Ultimate18 black XL
266346-5850006	SCO Front triangle Genius 900 Tuned 18 blk/squ oran S
266346-5850007	SCO Front triangle Genius 900 Tuned 18 blk/squ oran M
266346-5850008	SCO Front triangle Genius 900 Tuned 18 blk/squ oran L
266346-5850009	SCO Front triangle Genius 900 Tuned 18 blk/squ oran XL
266347-5850006	SCO Front triangle Genius 700 Tuned 18 blk/squ oran S
266347-5850007	SCO Front triangle Genius 700 Tuned 18 blk/squ oran M
266347-5850008	SCO Front triangle Genius 700 Tuned 18 blk/squ oran L
266347-5850009	SCO Front triangle Genius 700 Tuned 18 blk/squ oran XL
266348-5806006	SCO Front triangle Genius 710 18 sul yw/dk gn S
266348-5806007	SCO Front triangle Genius 710 18 sul yw/dk gn M
266348-5806008	SCO Front triangle Genius 710 18 sul yw/dk gn L
266348-5806009	SCO Front triangle Genius 710 18 sul yw/dk gn XL
266349-1457006	SCO Front triangle Genius 720 18 grey/green S
266349-1457007	SCO Front triangle Genius 720 18 grey/green M
266349-1457008	SCO Front triangle Genius 720 18 grey/green L
266349-1457009	SCO Front triangle Genius 720 18 grey/green XL
266350-1457006	SCO Front triangle Genius 920 18 grey/green S
266350-1457007	SCO Front triangle Genius 920 18 grey/green M
266350-1457008	SCO Front triangle Genius 920 18 grey/green L
266350-1457009	SCO Front triangle Genius 920 18 grey/green XL
266351-1415006	SCO Front triangle Gambler 710 18 oran/blue S
266351-1415007	SCO Front triangle Gambler 710 18 oran/blue M
266351-1415008	SCO Front triangle Gambler 710 18 oran/blue L
266352-1294006	SCO Front triangle Gambler 720 18 grey/orange S
266352-1294007	SCO Front triangle Gambler 720 18 grey/orange M
266352-1294008	SCO Front triangle Gambler 720 18 grey/orange L
266353-1648006	SCO Front triangle Gambler 730 18 red/yellow S
266353-1648007	SCO Front triangle Gambler 730 18 red/yellow M
266353-1648008	SCO Front triangle Gambler 730 18 red/yellow L
266354-5547006	SCO Front triangle Voltage FR 710 18 mt bk/silver S
266354-5547007	SCO Front triangle Voltage FR 710 18 mt bk/silver M
266354-5547008	SCO Front triangle Voltage FR 710 18 mt bk/silver L
266355-1172006	SCO Front triangle Voltage FR 720 18 green/orange S
266355-1172007	SCO Front triangle Voltage FR 720 18 green/orange M
266355-1172008	SCO Front triangle Voltage FR 720 18 green/orange L
266356-4610006	SCO Front triangle Cont Spark RC 900 18 blk/turq blu S
266356-4610007	SCO Front triangle Cont Spark RC 900 18 blk/turq blu M
266356-4610008	SCO Front triangle Cont Spark RC 900 18 blk/turq blu L

266357-5863006	SCO Front triangle Cont Spark 910 18 dar grey/pin S
266357-5863007	SCO Front triangle Cont Spark 910 18 dar grey/pin M
266357-5863008	SCO Front triangle Cont Spark 910 18 dar grey/pin L
266358-0003006	SCO Front triangle Cont Spark 920 18 blue S
266358-0003007	SCO Front triangle Cont Spark 920 18 blue M
266358-0003008	SCO Front triangle Cont Spark 920 18 blue L
266359-4060006	SCO Front triangle Cont Spark 710 18 pink/orange S
266359-4060007	SCO Front triangle Cont Spark 710 18 pink/orange M
266359-4060008	SCO Front triangle Cont Spark 710 18 pink/orange L
266360-1100006	SCO Front triangle Cont Genius 710 18 grey/blue S
266360-1100007	SCO Front triangle Cont Genius 710 18 grey/blue M
266360-1100008	SCO Front triangle Cont Genius 710 18 grey/blue L
266361-5863006	SCO Front triangle Cont Genius 720 18 dar grey/pin S
266361-5863007	SCO Front triangle Cont Genius 720 18 dar grey/pin M
266361-5863008	SCO Front triangle Cont Genius 720 18 dar grey/pin L
266362-2454006	SCO Front triangle Cont Genius 730 18 blue/lime S
266362-2454007	SCO Front triangle Cont Genius 730 18 blue/lime M
266362-2454008	SCO Front triangle Cont Genius 730 18 blue/lime L
266363-5850006	SCO Front triangle E-Spark 700 TND 18 blk/squ oran S
266363-5850007	SCO Front triangle E-Spark 700 TND 18 blk/squ oran M
266363-5850008	SCO Front triangle E-Spark 700 TND 18 blk/squ oran L
266363-5850009	SCO Front triangle E-Spark 700 TND 18 blk/squ oran XL
266364-3694006	SCO Front triangle E-Spark 710 18 blk matt/gry S
266364-3694007	SCO Front triangle E-Spark 710 18 blk matt/gry M
266364-3694008	SCO Front triangle E-Spark 710 18 blk matt/gry L
266364-3694009	SCO Front triangle E-Spark 710 18 blk matt/gry XL
266365-5524006	SCO Front triangle E-Spark 720 18 gry matt gre S
266365-5524007	SCO Front triangle E-Spark 720 18 gry matt gre M
266365-5524008	SCO Front triangle E-Spark 720 18 gry matt gre L
266365-5524009	SCO Front triangle E-Spark 720 18 gry matt gre XL
266366-5850006	SCO Front triangle E-Spark 730 18 blk/squ oran S
266366-5850007	SCO Front triangle E-Spark 730 18 blk/squ oran M
266366-5850008	SCO Front triangle E-Spark 730 18 blk/squ oran L
266366-5850009	SCO Front triangle E-Spark 730 18 blk/squ oran XL
266367-5850006	SCO Front triangle E-Genius 700 TND 18 blk/squ oran S
266367-5850007	SCO Front triangle E-Genius 700 TND 18 blk/squ oran M
266367-5850008	SCO Front triangle E-Genius 700 TND 18 blk/squ oran L
266367-5850009	SCO Front triangle E-Genius 700 TND 18 blk/squ oran XL
266368-3694006	SCO Front triangle E-Genius 710 18 blk matt/gry S
266368-3694007	SCO Front triangle E-Genius 710 18 blk matt/gry M
266368-3694008	SCO Front triangle E-Genius 710 18 blk matt/gry L
266368-3694009	SCO Front triangle E-Genius 710 18 blk matt/gry XL
266369-1294006	SCO Front triangle E-Genius 720/920 18 grey/orange S
266369-1294007	SCO Front triangle E-Genius 720/920 18 grey/orange M
266369-1294008	SCO Front triangle E-Genius 720/920 18 grey/orange L
266369-1294009	SCO Front triangle E-Genius 720/920 18 grey/orange XL
266370-3694006	SCO Front triangle E-Genius 730 18 blk matt/gry S
266370-3694007	SCO Front triangle E-Genius 730 18 blk matt/gry M
266370-3694008	SCO Front triangle E-Genius 730 18 blk matt/gry L
266370-3694009	SCO Front triangle E-Genius 730 18 blk matt/gry XL
266371-1050006	SCO Front triangle Cont E-Spark 710 18 white/green S
266371-1050007	SCO Front triangle Cont E-Spark 710 18 white/green M
266371-1050008	SCO Front triangle Cont E-Spark 710 18 white/green L
266372-2785006	SCO Front triangle Cont E-Genius 720 18 dk grey/blue S
266372-2785007	SCO Front triangle Cont E-Genius 720 18 dk grey/blue M
266372-2785008	SCO Front triangle Cont E-Genius 720 18 dk grey/blue L
266373-4731006	SCO Frame Spark 930 18 Wty blac glo/red S
266373-4731007	SCO Frame Spark 930 18 Wty blac glo/red M
266373-4731008	SCO Frame Spark 930 18 Wty blac glo/red L
266373-4731009	SCO Frame Spark 930 18 Wty blac glo/red XL
266374-1049006	SCO Frame Spark 720 18 Wty grey/red S
266374-1049007	SCO Frame Spark 720 18 Wty grey/red M
266374-1049008	SCO Frame Spark 720 18 Wty grey/red L
266374-1049009	SCO Frame Spark 720 18 Wty grey/red XL

266375-5850006	SCO Frame Spark 960 18 Wty blk/squ oran S
266375-5850007	SCO Frame Spark 960 18 Wty blk/squ oran M
266375-5850008	SCO Frame Spark 960 18 Wty blk/squ oran L
266375-5850009	SCO Frame Spark 960 18 Wty blk/squ oran XL
266376-1043006	SCO Frame Cont Spark 930 18 Wty black/green S
266376-1043007	SCO Frame Cont Spark 930 18 Wty black/green M
266376-1043008	SCO Frame Cont Spark 930 18 Wty black/green L
266377-5850006	SCO Frame Genius 730 18 Wty blk/squ oran S
266377-5850007	SCO Frame Genius 730 18 Wty blk/squ oran M
266377-5850008	SCO Frame Genius 730 18 Wty blk/squ oran L
266377-5850009	SCO Frame Genius 730 18 Wty blk/squ oran XL
266378-5850006	SCO Frame Genius 930 18 Wty blk/squ oran S
266378-5850007	SCO Frame Genius 930 18 Wty blk/squ oran M
266378-5850008	SCO Frame Genius 930 18 Wty blk/squ oran L
266378-5850009	SCO Frame Genius 930 18 Wty blk/squ oran XL
266379-5024006	SCO Frame Scale 900 RC Pro 18 Wty blck/sul yel S
266379-5024007	SCO Frame Scale 900 RC Pro 18 Wty blck/sul yel M
266379-5024008	SCO Frame Scale 900 RC Pro 18 Wty blck/sul yel L
266379-5024009	SCO Frame Scale 900 RC Pro 18 Wty blck/sul yel XL
266380-1294006	SCO Frame Scale 910 18 Wty grey/orange S
266380-1294007	SCO Frame Scale 910 18 Wty grey/orange M
266380-1294008	SCO Frame Scale 910 18 Wty grey/orange L
266380-1294009	SCO Frame Scale 910 18 Wty grey/orange XL
266381-4731006	SCO Frame Scale 940 18 Wty blac glo/red S
266381-4731007	SCO Frame Scale 940 18 Wty blac glo/red M
266381-4731008	SCO Frame Scale 940 18 Wty blac glo/red L
266381-4731009	SCO Frame Scale 940 18 Wty blac glo/red XL
266381-4731010	SCO Frame Scale 940 18 Wty blac glo/red XXL
266382-1457006	SCO Frame Scale 960 18 Wty grey/green S
266382-1457007	SCO Frame Scale 960 18 Wty grey/green M
266382-1457008	SCO Frame Scale 960 18 Wty grey/green L
266382-1457009	SCO Frame Scale 960 18 Wty grey/green XL
266382-1457010	SCO Frame Scale 960 18 Wty grey/green XXL
266383-1049006	SCO Frame Scale 710 18 Wty grey/red S
266383-1049007	SCO Frame Scale 710 18 Wty grey/red M
266383-1049008	SCO Frame Scale 710 18 Wty grey/red L
266383-1049009	SCO Frame Scale 710 18 Wty grey/red XL
266384-1454006	SCO Frame Big Jon 18 Wty blue/ orange S
266384-1454007	SCO Frame Big Jon 18 Wty blue/ orange M
266384-1454008	SCO Frame Big Jon 18 Wty blue/ orange L
266384-1454009	SCO Frame Big Jon 18 Wty blue/ orange XL
266385-3694006	SCO Frame Aspect 900 18 Wty blk matt/gry S
266385-3694007	SCO Frame Aspect 900 18 Wty blk matt/gry M
266385-3694008	SCO Frame Aspect 900 18 Wty blk matt/gry L
266385-3694009	SCO Frame Aspect 900 18 Wty blk matt/gry XL
266385-3694010	SCO Frame Aspect 900 18 Wty blk matt/gry XXL
266386-1049005	SCO Frame Aspect 710 18 Wty grey/red XS
266386-1049006	SCO Frame Aspect 710 18 Wty grey/red S
266386-1049007	SCO Frame Aspect 710 18 Wty grey/red M
266386-1049008	SCO Frame Aspect 710 18 Wty grey/red L
266386-1049009	SCO Frame Aspect 710 18 Wty grey/red XL
266387-1049006	SCO Frame Aspect 910 18 Wty grey/red S
266387-1049007	SCO Frame Aspect 910 18 Wty grey/red M
266387-1049008	SCO Frame Aspect 910 18 Wty grey/red L
266387-1049009	SCO Frame Aspect 910 18 Wty grey/red XL
266387-1049010	SCO Frame Aspect 910 18 Wty grey/red XXL
266388-5889006	SCO Frame Aspect 980 V/brake 18 Wty ma bl/su yel S
266388-5889007	SCO Frame Aspect 980 V/brake 18 Wty ma bl/su yel M
266388-5889008	SCO Frame Aspect 980 V/brake 18 Wty ma bl/su yel L
266388-5889009	SCO Frame Aspect 980 V/brake 18 Wty ma bl/su yel XL
266388-5889010	SCO Frame Aspect 980 V/brake 18 Wty ma bl/su yel XXL
266389-5889005	SCO Frame Aspect 780 V/brake 18 Wty ma bl/su yel XS
266389-5889006	SCO Frame Aspect 780 V/brake 18 Wty ma bl/su yel S
266389-5889007	SCO Frame Aspect 780 V/brake 18 Wty ma bl/su yel M

266389-5889008	SCO Frame Aspect 780 V/brake 18 Wty ma bl/su yel L
266389-5889009	SCO Frame Aspect 780 V/brake 18 Wty ma bl/su yel XL
266390-4610006	SCO Frame Cont Scale RC 900 18 Wty blk/turq blu S
266390-4610007	SCO Frame Cont Scale RC 900 18 Wty blk/turq blu M
266390-4610008	SCO Frame Cont Scale RC 900 18 Wty blk/turq blu L
266391-1100006	SCO Frame Cont Scale 900 18 Wty grey/blue S
266391-1100007	SCO Frame Cont Scale 900 18 Wty grey/blue M
266391-1100008	SCO Frame Cont Scale 900 18 Wty grey/blue L
266392-5863879	SCO Frame Cont Scale 10 18 Wty dar grey/pin S7
266392-5863881	SCO Frame Cont Scale 10 18 Wty dar grey/pin M9
266392-5863882	SCO Frame Cont Scale 10 18 Wty dar grey/pin L9
266392-5863888	SCO Frame Cont Scale 10 18 Wty dar grey/pin XS7
266393-1100879	SCO Frame Cont Scale 20 18 Wty grey/blue S7
266393-1100881	SCO Frame Cont Scale 20 18 Wty grey/blue M9
266393-1100882	SCO Frame Cont Scale 20 18 Wty grey/blue L9
266393-1100888	SCO Frame Cont Scale 20 18 Wty grey/blue XS7
266394-1043005	SCO Frame Cont 710 18 Wty black/green XS
266394-1043006	SCO Frame Cont 710 18 Wty black/green S
266394-1043007	SCO Frame Cont 710 18 Wty black/green M
266394-1043008	SCO Frame Cont 710 18 Wty black/green L
266395-5818222	SCO Frame Scale JR 26 18 dk gr/ sul yl 1size
266396-1172222	SCO Frame Voltage JR 26 V/ Disc brake 18 green/orange 1size
266397-1049222	SCO Frame Scale RC JR 24 Disc brake 18 grey/red 1size
266398-5021222	SCO Frame Scale JR 24+ 18 sea bl/su ye 1size
266400-0006222	SCO Frame Voltage YZ0.1 Wty green 1size
266401-1649222	SCO Frameset Scale JR20 rigid V brake 18 or/yellow 1size
266402-5021222	SCO Frame Scale JR 20+ 18 sea bl/su ye 1size
266403-1018222	SCO Frame Volt-X 10 18 Wty red/black 1size
266404-1001006	SCO Frame E-Scale 710 18 Wty black/grey S
266404-1001007	SCO Frame E-Scale 710 18 Wty black/grey M
266404-1001008	SCO Frame E-Scale 710 18 Wty black/grey L
266404-1001009	SCO Frame E-Scale 710 18 Wty black/grey XL
266405-1001006	SCO Frame E-Scale 910 18 Wty black/grey S
266405-1001007	SCO Frame E-Scale 910 18 Wty black/grey M
266405-1001008	SCO Frame E-Scale 910 18 Wty black/grey L
266405-1001009	SCO Frame E-Scale 910 18 Wty black/grey XL
266406-5847006	SCO Frame E-Scale 730 18 Wty blk/rall red S
266406-5847007	SCO Frame E-Scale 730 18 Wty blk/rall red M
266406-5847008	SCO Frame E-Scale 730 18 Wty blk/rall red L
266406-5847009	SCO Frame E-Scale 730 18 Wty blk/rall red XL
266407-5847006	SCO Frame E-Scale 930 18 Wty blk/rall red S
266407-5847007	SCO Frame E-Scale 930 18 Wty blk/rall red M
266407-5847008	SCO Frame E-Scale 930 18 Wty blk/rall red L
266407-5847009	SCO Frame E-Scale 930 18 Wty blk/rall red XL
266408-4060006	SCO Frame Cont E-Scale 730 18 Wty pink/orange S
266408-4060007	SCO Frame Cont E-Scale 730 18 Wty pink/orange M
266408-4060008	SCO Frame Cont E-Scale 730 18 Wty pink/orange L
266409-1043879	SCO Frame E-Aspect 10 18 Wty black/green S7
266409-1043881	SCO Frame E-Aspect 10 18 Wty black/green M9
266409-1043882	SCO Frame E-Aspect 10 18 Wty black/green L9
266409-1043883	SCO Frame E-Aspect 10 18 Wty black/green XL9
266410-1004879	SCO Frame Cont E-Aspect 20 18 Wty black/blue S7
266410-1004881	SCO Frame Cont E-Aspect 20 18 Wty black/blue M9
266410-1004882	SCO Frame Cont E-Aspect 20 18 Wty black/blue L9
266410-1004883	SCO Frame Cont E-Aspect 20 18 Wty black/blue XL9
266411-4063006	SCO Frame E-Silence EVO 18 Wty blk/dk green S
266411-4063007	SCO Frame E-Silence EVO 18 Wty blk/dk green M
266411-4063008	SCO Frame E-Silence EVO 18 Wty blk/dk green L
266411-4063009	SCO Frame E-Silence EVO 18 Wty blk/dk green XL
266412-5850006	SCO Frame E-Silence 10 Men 18 Wty blk/squ oran S
266412-5850007	SCO Frame E-Silence 10 Men 18 Wty blk/squ oran M
266412-5850008	SCO Frame E-Silence 10 Men 18 Wty blk/squ oran L
266412-5850009	SCO Frame E-Silence 10 Men 18 Wty blk/squ oran XL
266413-1236006	SCO Frame E-Silence 10 Lady 18 Wty black/gold S

266413-1236007	SCO Frame E-Silence 10 Lady 18 Wty black/gold M
266413-1236008	SCO Frame E-Silence 10 Lady 18 Wty black/gold L
266416-1338006	SCO Frame E-SUB Active Men 18 Wty blk mat/orng S
266416-1338007	SCO Frame E-SUB Active Men 18 Wty blk mat/orng M
266416-1338008	SCO Frame E-SUB Active Men 18 Wty blk mat/orng L
266416-1338009	SCO Frame E-SUB Active Men 18 Wty blk mat/orng XL
266417-1338006	SCO Frame E-SUB Active Lady 18 Wty blk mat/orng S
266417-1338007	SCO Frame E-SUB Active Lady 18 Wty blk mat/orng M
266417-1338008	SCO Frame E-SUB Active Lady 18 Wty blk mat/orng L
266418-4878006	SCO Frame E-SUB Tour Men Belt 18 Wty titanio/oran S
266418-4878007	SCO Frame E-SUB Tour Men Belt 18 Wty titanio/oran M
266418-4878008	SCO Frame E-SUB Tour Men Belt 18 Wty titanio/oran L
266418-4878009	SCO Frame E-SUB Tour Men Belt 18 Wty titanio/oran XL
266419-4878006	SCO Frame E-SUB Tour Uni Belt 18 Wty titanio/oran S
266419-4878007	SCO Frame E-SUB Tour Uni Belt 18 Wty titanio/oran M
266419-4878008	SCO Frame E-SUB Tour Uni Belt 18 Wty titanio/oran L
266420-1338006	SCO Frame E-SUB Active Uni 18 Wty blk mat/orng S
266420-1338007	SCO Frame E-SUB Active Uni 18 Wty blk mat/orng M
266420-1338008	SCO Frame E-SUB Active Uni 18 Wty blk mat/orng L
266421-1618006	SCO Frame E-SUB Active Uni rack type 18 black/cream S
266421-1618007	SCO Frame E-SUB Active Uni rack type 18 black/cream M
266421-1618008	SCO Frame E-SUB Active Uni rack type 18 black/cream L
266422-4876006	SCO Frame E-SUB Cross 20 Men 18 Wty titanio/red S
266422-4876007	SCO Frame E-SUB Cross 20 Men 18 Wty titanio/red M
266422-4876008	SCO Frame E-SUB Cross 20 Men 18 Wty titanio/red L
266422-4876009	SCO Frame E-SUB Cross 20 Men 18 Wty titanio/red XL
266423-4880006	SCO Frame E-SUB Cross 20 Lady 18 Wty titanio/grn S
266423-4880007	SCO Frame E-SUB Cross 20 Lady 18 Wty titanio/grn M
266423-4880008	SCO Frame E-SUB Cross 20 Lady 18 Wty titanio/grn L
266424-1236222	SCO Swingarm Spark RC 900 SL 18 black/gold 1size
266425-5024222	SCO Swingarm Spark RC 900 W/C 18 blck/sul yel 1size
266426-5024222	SCO Swingarm Spark RC 900 Pro 18 blck/sul yel 1size
266427-5847222	SCO Swingarm Spark RC 900 Team 18 blk/rall red 1size
266428-5850222	SCO Swingarm Spark RC 900 Comp 18 blk/squ oran 1size
266429-1236222	SCO Swingarm Spark 900 Ultimate 18 black/gold 1size
266430-3045222	SCO Swingarm Spark 900 Premium 18 carbon/grey 1size
266431-4731222	SCO Swingarm Spark 900 18 blac glo/red 1size
266432-1294222	SCO Swingarm Spark 910 18 grey/orange 1size
266433-5024222	SCO Swingarm Spark 920/940 18 blck/sul yel 1size
266435-0001222	SCO Swingarm Spark 700 Ultimate 18 black 1size
266436-5850222	SCO Swingarm Spark 700 Tuned 18 blk/squ oran 1size
266437-0003222	SCO Swingarm Spark 710 18 blue 1size
266438-0001222	SCO Chainstays Genius 700 Ultimate 18 black 1size
266439-5850222	SCO Chainstays Genius 900 Tuned 18 blk/squ oran 1size
266440-5850222	SCO Chainstays Genius 700 Tuned 18 blk/squ oran 1size
266441-5808222	SCO Chainstays Genius 710 18 dk ivy green 1size
266442-0011222	SCO Chainstays Genius 720 18 grey 1size
266443-0011222	SCO Chainstays Genius 920 18 grey 1size
266444-1415222	SCO Swingarm Gambler 710 18 oran/blue 1size
266445-1294222	SCO Swingarm Gambler 720 18 grey/orange 1size
266446-5547222	SCO Chainstays Voltage FR 710 18 mt bk/silver 1size
266447-1172222	SCO Chainstays Voltage FR 720 18 green/orange 1size
266448-4610222	SCO Swingarm Cont Spark RC 900 18 blk/turq blu 1size
266449-5863222	SCO Swingarm Cont Spark 910 18 dar grey/pin 1size
266450-0003222	SCO Swingarm Cont Spark 920 18 blue 1size
266451-4060222	SCO Swingarm Cont Spark 710 18 pink/orange 1size
266452-0011222	SCO Chainstays Cont Genius 710 18 grey 1size
266453-0091222	SCO Chainstays Cont Genius 720 18 dark grey 1size
266454-2454222	SCO Chainstays Cont Genius 730 18 blue/lime 1size
266455-1648222	SCO Swingarm Gambler 730 18 red/yellow 1size
266456-5850222	SCO Chainstays E-Spark 700 Tuned 18 blk/squ oran 1size
266457-3694222	SCO Chainstays E-Spark 710 18 blk matt/gry 1size
266458-0011222	SCO Chainstays E-Spark 720 18 grey 1size
266459-0001222	SCO Chainstays E-Spark 730 18 black 1size

266460-5850222	SCO Chainstays E-Genius 700 Tuned 18 blk/squ oran 1size
266461-0001222	SCO Chainstays E-Genius 710 18 black 1size
266462-0011222	SCO Chainstays E-Genius 720/920 18 grey 1size
266463-0091222	SCO Chainstays E-Genius 730 18 dark grey 1size
266464-1050222	SCO Chainstays Cont E-Spark 710 18 white/green 1size
266465-0091222	SCO Chainstays Cont E-Genius 720 18 dark grey 1size
266466-0001222	SCO Seatstays Genius 700 Ultimate 18 black 1size
266467-1004222	SCO Seatstays Genius 700 Tuned 18 black/blue 1size
266468-1004222	SCO Seatstays Genius 900 Tuned 18 black/blue 1size
266469-1089222	SCO Seatstays Genius 710 18 green/black 1size
266470-1457222	SCO Seatstays Genius 920 18 grey/green 1size
266471-1457222	SCO Seatstays Genius 720 18 grey/green 1size
266472-0001222	SCO Seatstays Voltage FR 710 18 black 1size
266473-1172222	SCO Seatstays Voltage FR 720 18 green/orange 1size
266474-3701222	SCO Seatstays Cont Genius 710 18 gry mat/blue 1size
266475-5863222	SCO Seatstays Cont Genius 720 18 dar grey/pin 1size
266476-2454222	SCO Seatstays Cont Genius 730 18 blue/lime 1size
266477-0001222	SCO Seatstays E-Spark 700 Tuned 18 black 1size
266478-3694222	SCO Seatstays E-Spark 710 18 blk matt/gry 1size
266479-5524222	SCO Seatstays E-Spark 720 18 gry matt gre 1size
266480-0001222	SCO Seatstays E-Spark 730 18 black 1size
266481-5850222	SCO Seatstays E-Genius 700 Tuned 18 blk/squ oran 1size
266482-3694222	SCO Seatstays E-Genius 710 18 blk matt/gry 1size
266483-1294222	SCO Seatstays E-Genius 720/920 18 grey/orange 1size
266484-3694222	SCO Seatstays E-Genius 730 18 blk matt/gry 1size
266485-1039222	SCO Seatstays Cont E-Spark 710 18 white/grey 1size
266486-2785222	SCO Seatstays Cont E-Genius 720 18 dk grey/blue 1size
266487-5024022	SCO Frameset Plasma Premium 18 Wty blck/sul yel M54
266487-5024885	SCO Frameset Plasma Premium 18 Wty blck/sul yel S51
266487-5024886	SCO Frameset Plasma Premium 18 Wty blck/sul yel L57
266487-5024887	SCO Frameset Plasma Premium 18 Wty blck/sul yel XL60
266488-0001019	SCO Frameset Addict RC Ulti Disc 18 Wty black XXS47
266488-0001020	SCO Frameset Addict RC Ulti Disc 18 Wty black XS49
266488-0001021	SCO Frameset Addict RC Ulti Disc 18 Wty black S52
266488-0001022	SCO Frameset Addict RC Ulti Disc 18 Wty black M54
266488-0001023	SCO Frameset Addict RC Ulti Disc 18 Wty black L56
266488-0001024	SCO Frameset Addict RC Ulti Disc 18 Wty black XL58
266488-0001025	SCO Frameset Addict RC Ulti Disc 18 Wty black 2XL61
266489-1000019	SCO Frameset Addict RC 15 Disc 18 Wty black/silver XXS47
266489-1000020	SCO Frameset Addict RC 15 Disc 18 Wty black/silver XS49
266489-1000021	SCO Frameset Addict RC 15 Disc 18 Wty black/silver S52
266489-1000022	SCO Frameset Addict RC 15 Disc 18 Wty black/silver M54
266489-1000023	SCO Frameset Addict RC 15 Disc 18 Wty black/silver L56
266489-1000024	SCO Frameset Addict RC 15 Disc 18 Wty black/silver XL58
266489-1000025	SCO Frameset Addict RC 15 Disc 18 Wty black/silver 2XL61
266490-1000019	SCO Frameset Addict 10 Disc 18 Wty black/silver XXS47
266490-1000020	SCO Frameset Addict 10 Disc 18 Wty black/silver XS49
266490-1000021	SCO Frameset Addict 10 Disc 18 Wty black/silver S52
266490-1000022	SCO Frameset Addict 10 Disc 18 Wty black/silver M54
266490-1000023	SCO Frameset Addict 10 Disc 18 Wty black/silver L56
266490-1000024	SCO Frameset Addict 10 Disc 18 Wty black/silver XL58
266490-1000025	SCO Frameset Addict 10 Disc 18 Wty black/silver 2XL61
266491-1000019	SCO Frameset Addict 10 18 Wty black/silver XXS47
266491-1000020	SCO Frameset Addict 10 18 Wty black/silver XS49
266491-1000021	SCO Frameset Addict 10 18 Wty black/silver S52
266491-1000022	SCO Frameset Addict 10 18 Wty black/silver M54
266491-1000023	SCO Frameset Addict 10 18 Wty black/silver L56
266491-1000024	SCO Frameset Addict 10 18 Wty black/silver XL58
266491-1000025	SCO Frameset Addict 10 18 Wty black/silver 2XL61
266492-5547019	SCO Frameset Speedster SE 18 Wty mt bk/silver XXS47
266492-5547020	SCO Frameset Speedster SE 18 Wty mt bk/silver XS49
266492-5547021	SCO Frameset Speedster SE 18 Wty mt bk/silver S52
266492-5547022	SCO Frameset Speedster SE 18 Wty mt bk/silver M54
266492-5547023	SCO Frameset Speedster SE 18 Wty mt bk/silver L56

266492-5547024	SCO Frameset Speedster SE 18 Wty mt bk/silver XL58
266492-5547025	SCO Frameset Speedster SE 18 Wty mt bk/silver 2XL61
266493-1049019	SCO Frameset Speedster 10 Disc 18 Wty grey/red XXS47
266493-1049020	SCO Frameset Speedster 10 Disc 18 Wty grey/red XS49
266493-1049021	SCO Frameset Speedster 10 Disc 18 Wty grey/red S52
266493-1049022	SCO Frameset Speedster 10 Disc 18 Wty grey/red M54
266493-1049023	SCO Frameset Speedster 10 Disc 18 Wty grey/red L56
266493-1049024	SCO Frameset Speedster 10 Disc 18 Wty grey/red XL58
266493-1049025	SCO Frameset Speedster 10 Disc 18 Wty grey/red 2XL61
266494-1054019	SCO Frameset Metrix 10 Disc 18 Wty blue/yellow XXS47
266494-1054020	SCO Frameset Metrix 10 Disc 18 Wty blue/yellow XS49
266494-1054021	SCO Frameset Metrix 10 Disc 18 Wty blue/yellow S52
266494-1054022	SCO Frameset Metrix 10 Disc 18 Wty blue/yellow M54
266494-1054023	SCO Frameset Metrix 10 Disc 18 Wty blue/yellow L56
266494-1054024	SCO Frameset Metrix 10 Disc 18 Wty blue/yellow XL58
266494-1054025	SCO Frameset Metrix 10 Disc 18 Wty blue/yellow 2XL61
266495-1338019	SCO Frameset Metrix 20 Disc 18 Wty blk mat/orng XXS47
266495-1338020	SCO Frameset Metrix 20 Disc 18 Wty blk mat/orng XS49
266495-1338021	SCO Frameset Metrix 20 Disc 18 Wty blk mat/orng S52
266495-1338022	SCO Frameset Metrix 20 Disc 18 Wty blk mat/orng M54
266495-1338023	SCO Frameset Metrix 20 Disc 18 Wty blk mat/orng L56
266495-1338024	SCO Frameset Metrix 20 Disc 18 Wty blk mat/orng XL58
266495-1338025	SCO Frameset Metrix 20 Disc 18 Wty blk mat/orng 2XL61
266496-5850020	SCO Frameset Addict Gravel 10 D 18 Wty blk/squ oran XS49
266496-5850021	SCO Frameset Addict Gravel 10 D 18 Wty blk/squ oran S52
266496-5850022	SCO Frameset Addict Gravel 10 D 18 Wty blk/squ oran M54
266496-5850023	SCO Frameset Addict Gravel 10 D 18 Wty blk/squ oran L56
266496-5850024	SCO Frameset Addict Gravel 10 D 18 Wty blk/squ oran XL58
266497-1049019	SCO Frameset Speedster Grav 10 D 18 Wty grey/red XXS47
266497-1049020	SCO Frameset Speedster Grav 10 D 18 Wty grey/red XS49
266497-1049021	SCO Frameset Speedster Grav 10 D 18 Wty grey/red S52
266497-1049022	SCO Frameset Speedster Grav 10 D 18 Wty grey/red M54
266497-1049023	SCO Frameset Speedster Grav 10 D 18 Wty grey/red L56
266497-1049024	SCO Frameset Speedster Grav 10 D 18 Wty grey/red XL58
266497-1049025	SCO Frameset Speedster Grav 10 D 18 Wty grey/red 2XL61
266498-4261019	SCO Frameset Cont Addict 15 Disc 18 Wty wh/petrol gn XXS47
266498-4261020	SCO Frameset Cont Addict 15 Disc 18 Wty wh/petrol gn XS49
266498-4261021	SCO Frameset Cont Addict 15 Disc 18 Wty wh/petrol gn S52
266498-4261022	SCO Frameset Cont Addict 15 Disc 18 Wty wh/petrol gn M54
266498-4261023	SCO Frameset Cont Addict 15 Disc 18 Wty wh/petrol gn L56
266499-4261019	SCO Frameset Cont Speedster 15 D 18 Wty wh/petrol gn XXS47
266499-4261020	SCO Frameset Cont Speedster 15 D 18 Wty wh/petrol gn XS49
266499-4261021	SCO Frameset Cont Speedster 15 D 18 Wty wh/petrol gn S52
266499-4261022	SCO Frameset Cont Speedster 15 D 18 Wty wh/petrol gn M54
266499-4261023	SCO Frameset Cont Speedster 15 D 18 Wty wh/petrol gn L56
266499-4261024	SCO Frameset Cont Speedster 15 D 18 Wty wh/petrol gn XL58
266499-4261025	SCO Frameset Cont Speedster 15 D 18 Wty wh/petrol gn 2XL61
266500-4261019	SCO Frameset Cont Speedster 15 18 Wty wh/petrol gn XXS47
266500-4261020	SCO Frameset Cont Speedster 15 18 Wty wh/petrol gn XS49
266500-4261021	SCO Frameset Cont Speedster 15 18 Wty wh/petrol gn S52
266500-4261022	SCO Frameset Cont Speedster 15 18 Wty wh/petrol gn M54
266500-4261023	SCO Frameset Cont Speedster 15 18 Wty wh/petrol gn L56
266500-4261024	SCO Frameset Cont Speedster 15 18 Wty wh/petrol gn XL58
266500-4261025	SCO Frameset Cont Speedster 15 18 Wty wh/petrol gn 2XL61
266501-1049006	SCO Frameset Silence EVO 18 Wty grey/red S
266501-1049007	SCO Frameset Silence EVO 18 Wty grey/red M
266501-1049008	SCO Frameset Silence EVO 18 Wty grey/red L
266501-1049009	SCO Frameset Silence EVO 18 Wty grey/red XL
266502-4063006	SCO Frameset Silence 10 Men 18 Wty blk/dk green S
266502-4063007	SCO Frameset Silence 10 Men 18 Wty blk/dk green M
266502-4063008	SCO Frameset Silence 10 Men 18 Wty blk/dk green L
266502-4063009	SCO Frameset Silence 10 Men 18 Wty blk/dk green XL
266503-4063006	SCO Frameset Silence 10 Lady 18 Wty blk/dk green S
266503-4063007	SCO Frameset Silence 10 Lady 18 Wty blk/dk green M

266503-4063008	SCO Frameset Silence 10 Lady 18 Wty blk/dk green L
266504-4063006	SCO Frame Sub Sport 10 Disc Men 18 Wty blk/dk green S
266504-4063007	SCO Frame Sub Sport 10 Disc Men 18 Wty blk/dk green M
266504-4063008	SCO Frame Sub Sport 10 Disc Men 18 Wty blk/dk green L
266504-4063009	SCO Frame Sub Sport 10 Disc Men 18 Wty blk/dk green XL
266505-4198006	SCO Frame Sub Sport 10 Disc Lady 18 Wty whit/emerald S
266505-4198007	SCO Frame Sub Sport 10 Disc Lady 18 Wty whit/emerald M
266505-4198008	SCO Frame Sub Sport 10 Disc Lady 18 Wty whit/emerald L
266506-4879006	SCO Frame Sub Sport 30 v brake Men18 Wty titanio/gold S
266506-4879007	SCO Frame Sub Sport 30 v brake Men18 Wty titanio/gold M
266506-4879008	SCO Frame Sub Sport 30 v brake Men18 Wty titanio/gold L
266506-4879009	SCO Frame Sub Sport 30 v brake Men18 Wty titanio/gold XL
266507-4879006	SCO Frame Sub Sport 30 v brake Lady18Wty titanio/gold S
266507-4879007	SCO Frame Sub Sport 30 v brake Lady18Wty titanio/gold M
266507-4879008	SCO Frame Sub Sport 30 v brake Lady18Wty titanio/gold L
266508-1338006	SCO Frame SUB Comfort 10 v brakeMen18Wty blk mat/orng S
266508-1338007	SCO Frame SUB Comfort 10 v brakeMen18Wty blk mat/orng M
266508-1338008	SCO Frame SUB Comfort 10 v brakeMen18Wty blk mat/orng L
266508-1338009	SCO Frame SUB Comfort 10 v brakeMen18Wty blk mat/orng XL
266509-1338006	SCO Frame SUB Comfort 10 vbrake unisex18 blk mat/orng S
266509-1338007	SCO Frame SUB Comfort 10 vbrake unisex18 blk mat/orng M
266509-1338008	SCO Frame SUB Comfort 10 vbrake unisex18 blk mat/orng L
266510-5547006	SCO Frame SUB Cross 10 disc Men 18 Wty mt bk/silver S
266510-5547007	SCO Frame SUB Cross 10 disc Men 18 Wty mt bk/silver M
266510-5547008	SCO Frame SUB Cross 10 disc Men 18 Wty mt bk/silver L
266510-5547009	SCO Frame SUB Cross 10 disc Men 18 Wty mt bk/silver XL
266510-5547010	SCO Frame SUB Cross 10 disc Men 18 Wty mt bk/silver XXL
266511-5547006	SCO Frame SUB Cross 10 disc Lady 18 Wty mt bk/silver S
266511-5547007	SCO Frame SUB Cross 10 disc Lady 18 Wty mt bk/silver M
266511-5547008	SCO Frame SUB Cross 10 disc Lady 18 Wty mt bk/silver L
266511-5547009	SCO Frame SUB Cross 10 disc Lady 18 Wty mt bk/silver XL
266512-5847019	SCO Frameset Foil 10 18 Wty blk/rall red XXS47
266512-5847020	SCO Frameset Foil 10 18 Wty blk/rall red XS49
266512-5847021	SCO Frameset Foil 10 18 Wty blk/rall red S52
266512-5847022	SCO Frameset Foil 10 18 Wty blk/rall red M54
266512-5847023	SCO Frameset Foil 10 18 Wty blk/rall red L56
266512-5847024	SCO Frameset Foil 10 18 Wty blk/rall red XL58
266512-5847025	SCO Frameset Foil 10 18 Wty blk/rall red 2XL61
266513-5024222	SCO Fork Scale RC JR 24 rigid Disc 18 blck/sul yel 1size
266514-1010222	SCO Fork Scale JR 24 susp Disc 18 red/grey 1size
266515-1750222	SCO Fork Scale JR 24 rigid V-brake 18 sn orag/orag 1size
266516-1054222	SCO Fork Scale JR 24+ rigid Disc 18 blue/yellow 1size
266517-1338222	SCO Fork Voltage JR 24 susp Disc 18 blk mat/orng 1size
266518-1040222	SCO Fork Voltage JR 24 V-brake 18 black/yellow 1size
266520-0003222	SCO Fork Contessa JR 24 rigid V-brake 18 blue 1size
266521-1454222	SCO Fork Big Jon 18 blue/orange 1size
266522-1054222	SCO Fork Scale JR 20+ rigid Disc 18 blue/yellow 1size
266523-2978222	SCO Fork Volt-X 10 18 black gloss 1size
266524-0328222	SCO Fork Volt-X 20 18 blue matt 1size
266525-0005222	SCO Fork Volt-X 30 18 yellow 1size
266526-5024022	SCO Fork Plasma Premium 18 blck/sul yel M54
266526-5024885	SCO Fork Plasma Premium 18 blck/sul yel S51
266526-5024886	SCO Fork Plasma Premium 18 blck/sul yel L57
266526-5024887	SCO Fork Plasma Premium 18 blck/sul yel XL60
266527-5024022	SCO Fork Plasma RC 18 blck/sul yel M54
266527-5024885	SCO Fork Plasma RC 18 blck/sul yel S51
266527-5024886	SCO Fork Plasma RC 18 blck/sul yel L57
266527-5024887	SCO Fork Plasma RC 18 blck/sul yel XL60
266528-1306222	SCO Fork Plasma 10 18 blk matt/red 1size
266529-5024222	SCO Fork Plasma 20 18 blck/sul yel 1size
266530-5818222	SCO Fork Foil Premium Disc Di2 18 dk gr/sul yl 1size
266531-5024222	SCO Fork Foil RC 18 blck/sul yel 1size
266532-5847222	SCO Fork Foil 10 Disc Di2 18 blk/rall red 1size
266533-5847222	SCO Fork Foil 10 Di2 18 blk/rall red 1size

266534-1105222	SCO Fork Foil 20 Disc 18 blue/ red 1size
266535-1105222	SCO Fork Foil 20 18 blue/red 1size
266536-3165222	SCO Fork Foil 30 18 sul yl/br wt 1size
266537-0001222	SCO Fork Addict RC Ultimate Disc 18 black 1size
266538-5024222	SCO Fork Addict RC Premium Disc DI2 18 blck/sul yel 1size
266539-5024222	SCO Fork Addict RC PRO DI2 18 blck/sul yel 1size
266540-1105222	SCO Fork Addict RC 10 18 blue/ red 1size
266541-1000222	SCO Fork Addict RC 15 Disc DI2 18 black/silver 1size
266542-5847222	SCO Fork Addict RC 20 Disc 18 blk/rall red 1size
266543-5847222	SCO Fork Addict RC 20 18 blk/ rall red 1size
266544-1000222	SCO Fork Addict 10 Disc 18 black/silver 1size
266545-1000222	SCO Fork Addict 10 18 black/ silver 1size
266546-1049222	SCO Fork Addict 20 Disc 18 grey/red 1size
266547-1049222	SCO Fork Addict 20 18 grey/red 1size
266548-5818222	SCO Fork Addict 30 Disc 18 dk gr/sul yl 1size
266549-5818222	SCO Fork Addict 30 18 dk gr/sul yl 1size
266550-1000222	SCO Fork Speedster SE 18 black/ silver 1size
266551-1049222	SCO Fork Speedster 10 Disc 18 grey/red 1size
266552-1049222	SCO Fork Speedster 10 18 grey/ red 1size
266553-5889222	SCO Fork Speedster 20 Disc 18 ma bl/su yel 1size
266554-5889222	SCO Fork Speedster 20 18 ma bl/su yel 1size
266555-1043222	SCO Fork Speedster 30 18 black/ green 1size
266556-1030222	SCO Fork Speedster 40 18 white/red 1size
266557-5847222	SCO Fork Speedster 50 18 blk/ rall red 1size
266558-1054222	SCO Fork Metrix 10 Disc 18 blue/ yellow 1size
266559-1338222	SCO Fork Metrix 20 Disc 18 blk mat/orng 1size
266560-1100222	SCO Fork Metrix 30 Disc 18 grey/blue 1size
266561-5850222	SCO Fork Addict Gravel 10 Disc 18 blk/squ oran 1size
266562-4063222	SCO Fork Addict Gravel 20 Disc 18 blk/dk green 1size
266563-2987222	SCO Fork Addict Gravel 30 Disc 18 dk gry/yello 1size
266564-1049222	SCO Fork Speedster Gravel 10 Disc 18 grey/red 1size
266565-4063222	SCO Fork Speedster Gravel 20 Disc 18 blk/dk green 1size
266566-5024222	SCO Fork Addict CX RC Disc 18 blck/sul yel 1size
266567-1049222	SCO Fork Silence EVO 18 grey/ red 1size
266568-4063222	SCO Fork Silence 10 Disc 18 blk/ dk green 1size
266569-5547222	SCO Fork Silence 20 Disc 18 mt bk/silver 1size
266570-5850222	SCO Fork Silence 30 Disc 18 blk/ squ oran 1size
266571-4063222	SCO Fork E-Silence EVO 18 blk/ dk green 1size
266573-9999222	SCO Igus bush set Spark/Geni-us/E- 18 no color 1size
266574-9999222	SCO Swingarm rep kit Genius 18 no color 1size
266575-9999222	SCO Shock mount hardware Gen18 Ran19 no color 1size
266576-9999222	SCO Shock mount bush set X-Fus Gen18 Ran no color 1size
266577-9999222	SCO Shock mount bush set Fox Gen18 Ran19 no color 1size
266578-0006222	SCO Linkage bar Genius alloy 18 green 1size
266578-1228222	SCO Linkage bar Genius alloy 18 red/blue 1size
266578-1457222	SCO Linkage bar Genius alloy 18 grey/green 1size
266578-2006222	SCO Linkage bar Genius alloy 18 dk grey/blck 1size
266578-5508222	SCO Linkage bar Genius alloy 18 blac/teal bl 1size
266578-5576222	SCO Linkage bar Genius alloy 18 matt black 1size
266579-0288222	SCO Linkage bar Genius carbon 18 gloss black 1size
266580-9999222	SCO Rear shock Gambler Fox X2 18 no color 1size
266581-9999222	SCO Rear shock Gambler Fox van RC 18 no color 1size
266582-5576222	SCO Linkage main link Gambler 18 matt black 1size
266583-9999222	SCO Rear shock Genius Fox Nude 4 Ksh 18 no color 1size
266584-9999222	SCO Rear shock Genius Fox Nude 4 18 no color 1size
266585-9999222	SCO Rear shock Genius X/Fu-sion Nude 4 18 no color 1size
266586-9999222	SCO Cableguide set Foil D mec/ Di2 18 no color 1size
266587-9999222	SCO Cableguide set Sca/Spa/ Gen H-tube 18 no color 1size
266589-9999222	SCO Spoke Sy/Form rep kit RP2.0 F 18 no color 1size
266590-9999222	SCO Spoke Sy/Form rep kit RP2.0 R 18 no color 1size
266591-9999222	SCO Spoke Sy/Form rep kit RP2.0 Disc 18 no color 1size
266592-9999222	SCO Spoke Sy/Form rep kit RR2.0 Disc 18 no color 1size
266593-9999222	SCO Spoke Sy/Form rep kit RR2.0 R 18 no color 1size
266594-9999222	SCO Spoke Sy/Form rep kit RR2.0 F 18 no color 1size

266595-9999222	SCO E-bike Comp magnet Spark/Genius 18 no color 1size
266596-0001222	SCO E-bike motor cover Shim Spa/Gen 18 black 1size
266596-1019222	SCO E-bike motor cover Shim Spa/Gen 18 grey/black 1size
266596-5850222	SCO E-bike motor cover Shim Spa/Gen 18 blk/squ oran 1size
266597-1001222	SCO E-bike motor cover Bosch Sca/Gen 18 black/grey 1size
266597-1042222	SCO E-bike motor cover Bosch Sca/Gen 18 black/red 1size
266597-1043222	SCO E-bike motor cover Bosch Sca/Gen 18 black/green 1size
266597-1254222	SCO E-bike motor cover Bosch Sca/Gen 18 black/pink 1size
266598-5575222	SCO E-bike motor cover Brose Asp/Sile 18 matt grey 1size
266598-5576222	SCO E-bike motor cover Brose Asp/Sile 18 matt black 1size
266598-5849222	SCO E-bike motor cover Brose Asp/Sile 18 rally red 1size
266598-5912222	SCO E-bike motor cover Brose Asp/Sile 18 Light m/grey 1size
266600-9999222	SCO E-bike Shock cableguide Sp/Gen 18 no color 1size
266601-9999222	SCO E-bike Chainguide Spark 18 no color 1size
266602-9999222	SCO E-bike Chainguide Genius 18 no color 1size
266603-9999222	SCO E-bike Chainstay protector Sp/Gen 18 no color 1size
266604-9999015	SCO E-bike DT bumper Spark/ Genius 18 no color S/M
266604-9999016	SCO E-bike DT bumper Spark/ Genius 18 no color L/XL
266605-9999222	SCO E-bike batt fitting kit Spa/ Gen 18 no color 1size
266606-0001366	SCO E-bike fenderset E-Sub/Sub Metasol18 black 50mm
266606-0001899	SCO E-bike fenderset E-Sub/Sub Metasol18 black 55mm
266606-0011366	SCO E-bike fenderset E-Sub/Sub Metasol18 grey 50mm
266606-0011899	SCO E-bike fenderset E-Sub/Sub Metasol18 grey 55mm
266607-9999222	SCO E-bike Swingarm rep kit E-Genius 18 no color 1size
266608-0001714	SCO Rim SY/X-30s D 32H 18 black 27.5"
266608-0001715	SCO Rim SY/X-30s D 32H 18 black 29"
266609-0001714	SCO Rim SY/Alex MD30 32H 18 black 27.5"
266609-0001715	SCO Rim SY/Alex MD30 32H 18 black 29"
266610-0001195	SCO Wheelset Syn/Alex Race 22 11sp black 700C
266611-0001195	SCO Wheelset Syn/Alex Race 22 D 11sp black 700C
266612-0001715	SCO Rim SY/ J26DB 32H black 29"
266613-0001715	SCO Rim SY/Form XR2.0 D 28H 18 black 29"
266614-0001715	SCO Rim SY/Form XR2.5 D 28H 18 black 29"
266615-0001714	SCO Rim SY/Form TR1.5 D 28H 18 black 27.5"
266616-0001714	SCO Rim SY/Form TR2.0 D 28H 18 black 27.5"
266616-0001715	SCO Rim SY/Form TR2.0 D 28H 18 black 29"
266617-0001195	SCO Rim SY/Form RP2.0 D 28H 18 black 700C
266618-0001195	SCO Rim SY/Form RP2.0 18H 18 black 700C
266619-0001195	SCO Rim SY/Form RP2.0 24H 18 black 700C
266620-0001715	SCO Rim SY/Form XR1.5 D 28H 18 black 29"
266621-5576294	SCO Seatpost Foil PR Wty 18 matt black 5
266621-5576309	SCO Seatpost Foil PR Wty 18 matt black 20
266643-5808005	SCO Frame Voltage YZ 10 18 Wty dk ivy green XS
266643-5808006	SCO Frame Voltage YZ 10 18 Wty dk ivy green S
266643-5808007	SCO Frame Voltage YZ 10 18 Wty dk ivy green M
266643-5808008	SCO Frame Voltage YZ 10 18 Wty dk ivy green L
266777-5576222	SCO Linkage floating link Gambler 18 matt black 1size
266778-9999222	SCO Dropout Hanger Speedster 18 no color 1size
266784-9999222	SCO Hub rep kit SY/Form XR2.5-TR-all F18 no color 1size
266785-9999222	SCO Hub rep kit SY/Form XR/ TR1.5 XD R 18 no color 1size
266786-9999222	SCO Hub rep kit SY/Form XR2.0 F 6blt 18 no color 1size
266787-9999222	SCO Hub rep kit SY/Form XR2.0 R XD 6blt no color 1size
266788-9999222	SCO Hub rep kit SY/Form TR2.0 R SHIM 18 no color 1size
266798-9999222	SCO Hub rep kit Silv SL/DTX-RC-XMC 1200 F no color 1size
266799-9999222	SCO Hub rep kit Silv SL/DT XRC-XMC 1200R no color 1size
266800-9999222	SCO Hub rep kit DT X/M 1825 F 18 no color 1size
266801-9999222	SCO Hub rep kit DT X 1825 XD R 18 no color 1size
266802-9999222	SCO Hub rep kit DT X 1825 SHIM R 18 no color 1size
266807-0001714	SCO Fork E-Aspect/Suntour Mobi 18 black 27.5"
266807-0001715	SCO Fork E-Aspect/Suntour Mobi 18 black 29"
266808-9999715	SCO Spoke SY/Form rep kit XR2.5 18 no color 29"
266809-9999715	SCO Spoke SY/Form rep kit XR1.5 18 no color 29"
266810-9999715	SCO Spoke SY/Form rep kit XR2.0 18 no color 29"
266811-9999714	SCO Spoke SY/Form rep kit TR2.0 18 no color 27.5"

266812-9999714	SCO Spoke SY/Form rep kit TR1.5 18 no color 27.5"
266812-9999715	SCO Spoke SY/Form rep kit TR1.5 18 no color 29"
266813-0001195	SCO Rim SY/Alex Race 24 D (28H) 18 black 700C
266814-0001195	SCO Rim SY/Form RR2.0 D 28H 18 black 700C
266815-0001195	SCO Rim SY/Form RR2.0 18H 18 black 700C
266816-0001195	SCO Rim SY/Form RR2.0 24H 18 black 700C
266817-9999715	SCO Rim DT XRC 1200 28H 18 Wty no color 29"
266818-9999714	SCO Rim DT XMC 1200 28H 18 Wty no color 27.5"
266819-9999715	SCO Rim DT X 1825 28H 18 Wty no color 29"
266820-9999715	SCO Rim DT X 1825 red 28H 18 Wty no color 29"
266821-9999714	SCO Rim DT M 1825 28H 18 Wty no color 27.5"
266821-9999715	SCO Rim DT M 1825 28H 18 Wty no color 29"
266822-9999714	SCO Rim DT M 1825 grey 28H 18 Wty no color 27.5"
266876-1697879	SCO Frame E-Aspect AT 18 Wty ivy/black S7
266876-1697881	SCO Frame E-Aspect AT 18 Wty ivy/black M9
266876-1697882	SCO Frame E-Aspect AT 18 Wty ivy/black L9
266876-1697883	SCO Frame E-Aspect AT 18 Wty ivy/black XL9
266877-0001714	SCO E-bike fender set E-Aspect AT 18 black 27.5"
266877-0001715	SCO E-bike fender set E-Aspect AT 18 black 29"
267279-0001006	SCO Frame E-Sub Sport 10 Men 18 black S
267279-0001007	SCO Frame E-Sub Sport 10 Men 18 black M
267279-0001008	SCO Frame E-Sub Sport 10 Men 18 black L
267279-0001009	SCO Frame E-Sub Sport 10 Men 18 black XL
267280-0001006	SCO Frame E-Sub Sport 10 Lady 18 black S
267280-0001007	SCO Frame E-Sub Sport 10 Lady 18 black M
267280-0001008	SCO Frame E-Sub Sport 10 Lady 18 black L
267281-1294222	SCO Linkage bar Contessa Genius 18 grey/orange 1size
267281-1413222	SCO Linkage bar Contessa Genius 18 blue/green 1size
267281-5344222	SCO Linkage bar Contessa Genius 18 blac/gry/pin 1size
267282-1043222	SCO Linkage bar Contessa Spark 100mm 18 black/green 1size
267283-0003222	SCO Linkage bar Contessa Spark 120mm 18 blue 1size
267283-0026222	SCO Linkage bar Contessa Spark 120mm 18 pink 1size
267283-1043222	SCO Linkage bar Contessa Spark 120mm 18 black/green 1size
267283-5863222	SCO Linkage bar Contessa Spark 120mm 18 dar grey/pin 1size
267284-0288222	SCO Linkage bar Spark alloy 100mm 18 gloss black 1size
267284-1001222	SCO Linkage bar Spark alloy 100mm 18 black/grey 1size
267284-1042222	SCO Linkage bar Spark alloy 100mm 18 black/red 1size
267285-1008222	SCO Linkage bar Spark alloy 120mm 18 orange/black 1size
267285-1009222	SCO Linkage bar Spark alloy 120mm 18 black/orange 1size
267285-1018222	SCO Linkage bar Spark alloy 120mm 18 red/black 1size
267285-1019222	SCO Linkage bar Spark alloy 120mm 18 grey/black 1size
267285-1034222	SCO Linkage bar Spark alloy 120mm 18 blue/black 1size
267285-1040222	SCO Linkage bar Spark alloy 120mm 18 black/yellow 1size
267285-1042222	SCO Linkage bar Spark alloy 120mm 18 black/red 1size
267285-1089222	SCO Linkage bar Spark alloy 120mm 18 green/black 1size
267285-5535222	SCO Linkage bar Spark alloy 120mm 18 mt bk/gls gr 1size
267286-5910222	SCO Linkage bar Spark carbon 100mm 18 carbon gloss 1size
267286-5911222	SCO Linkage bar Spark carbon 100mm 18 carbon matt 1size
267287-5910222	SCO Linkage bar Spark carbon 120mm 18 carbon gloss 1size
267287-5911222	SCO Linkage bar Spark carbon 120mm 18 carbon matt 1size
267288-9999222	SCO Light front Blueline Dynamo 18 Wty no color 1size
267289-0001334	SCO Chainguard SKS chainblade Sub 18 black 48
267290-0001222	SCO E-bike battery inter cover Scale 18 black 1size
267290-0011222	SCO E-bike battery inter cover Scale 18 grey 1size
267292-0001222	SCO E-bike battery cover inter Sub 18 black 1size
267292-0011222	SCO E-bike battery cover inter Sub 18 grey 1size
267293-0001222	SCO E-bike battery cover Shim Spa/Gen 18 black 1size
267294-0001222	SCO E-bike charge plug cover Sub/Sca 18 black 1size
267296-9999295	SCO E-bike light front Blueline 18 Wty no color 6
267296-9999301	SCO E-bike light front Blueline 18 Wty no color 12
267427-9999222	SCO Rear shock Spark 120mm Fox nude4 18 no color 1size
267428-9999222	SCO Rear shock Spark 120mm FoxNud4Ksh 18 no color 1size
267429-9999222	SCO Rear shock Spark 100mm FoxNud4Ksh 18 no color 1size
267430-9999222	SCO Rear shock Spark 100mm Fox nude4 18 no color 1size

267431-9999372	SCO Seatpost-serv.seal kit 2.0 no color 120mm
267431-9999901	SCO Seatpost-serv.seal kit 2.0 no color 150mm
267432-9999372	SCO Seatpost-serv.seal kit 2.5 no color 120mm
267583-1045222	SCO Frameset Scale JR24 rigid V brake 18 red/orange 1size
267638-9999222	SCO Axle RWS E-Aspect AT 142x12 Plugin no color 1size
267892-0001222	SCO E-bike rack E-Aspect AT 18 black 1size
268312-0011019	SCO Frameset Metrix 30 Disc 18 Wty grey XXS47
268312-0011020	SCO Frameset Metrix 30 Disc 18 Wty grey XS49
268312-0011021	SCO Frameset Metrix 30 Disc 18 Wty grey S52
268312-0011022	SCO Frameset Metrix 30 Disc 18 Wty grey M54
268312-0011023	SCO Frameset Metrix 30 Disc 18 Wty grey L56
268312-0011024	SCO Frameset Metrix 30 Disc 18 Wty grey XL58
268312-0011025	SCO Frameset Metrix 30 Disc 18 Wty grey 2XL61
268313-1050222	SCO Fork Contessa Addict 15D 18 white/green 1size
268314-1001222	SCO Fork Contessa Addict 25D 18 black/grey 1size
268315-1244222	SCO Fork Contessa Addict 35 18 pink/white 1size
268316-1050222	SCO Fork Contessa Speedster 15D 18 white/green 1size
268317-1050222	SCO Fork Contessa Speedster 15 18 white/green 1size
268318-1244222	SCO Fork Contessa Speedster 25 18 pink/white 1size
268319-1001222	SCO Fork Contessa Speedster 35 18 black/grey 1size
268320-1001222	SCO Linkage bar Spark RC 900 Comp 18 black/grey 1size
268410-9999222	SCO Tool hub/gear ring Form 21T MTB no color 1size
268411-9999222	SCO Tool hub/gear ring Form 15T road no color 1size
268412-9999222	SCO Hub rep gear ring Form 21T MTB no color 1size
268413-9999222	SCO Hub rep gear ring Form 15T road no color 1size
268473-0001222	SCO Chainguide set Genius 18 black 1size
268626-9999222	SCO Cableguide set Addict/Metrix10MF18 no color 1size
268639-9999222	SCO rack Sub Comfort Wty 18 no color 1size
268988-9999365	SCO Syn Hixon SL IC bar Wty 18 no color 40mm
268988-9999366	SCO Syn Hixon SL IC bar Wty 18 no color 50mm
268988-9999380	SCO Syn Hixon SL IC bar Wty 18 no color 60mm
269122-1001019	SCO Frameset Speedster LTD 1/18th Wty black/grey XXS47
269122-1001020	SCO Frameset Speedster LTD 1/18th Wty black/grey XS49
269122-1001021	SCO Frameset Speedster LTD 1/18th Wty black/grey S52
269122-1001022	SCO Frameset Speedster LTD 1/18th Wty black/grey M54
269122-1001023	SCO Frameset Speedster LTD 1/18th Wty black/grey L56
269122-1001024	SCO Frameset Speedster LTD 1/18th Wty black/grey XL58
269122-1001025	SCO Frameset Speedster LTD 1/18th Wty black/grey 2XL61
269123-1001222	SCO Fork Speedster LTD 1/18th Wty black/grey 1size
269306-0001222	SCO E-bike battery Bosch Scale 18 Wty black 1size
269654-0001714	SCO Tire Maxxis Minion DHF/DHRII F+R Wty black 27.5"
269702-9999222	SCO Seatpost cable barrel PAK-5 no color 1size
270432-0012222	SCO Chain KMC X10 120 links E/SUB Wty silver 1size
270898-9999222	SCO Hub rep kit SY/Form XR2.5 R XD 18 no color 1size
270899-9999222	SCO Hub rep kit SY/Form XR2.5 R SHIM 18 no color 1size
270900-9999222	SCO Hub rep kit SY/Form XR2.0 F CL 18 no color 1size
270901-9999222	SCO Hub rep kit SY/Form XR2.0 R CL 18 no color 1size
270962-0001193	SCO Front wheel Jr 24" CNC QR black 24"
270963-0001193	SCO Rear wheel Jr 24" CNC QR MF 7S black 24"
270964-0001194	SCO Rear wheel 26" Disc QR MF 7S black 26"
271330-1040019	SCO Frameset Addict RC Pro DI2 18 Wty black/yellow XXS47
271330-1040020	SCO Frameset Addict RC Pro DI2 18 Wty black/yellow XS49
271330-1040021	SCO Frameset Addict RC Pro DI2 18 Wty black/yellow S52
271330-1040022	SCO Frameset Addict RC Pro DI2 18 Wty black/yellow M54
271330-1040023	SCO Frameset Addict RC Pro DI2 18 Wty black/yellow L56
271330-1040024	SCO Frameset Addict RC Pro DI2 18 Wty black/yellow XL58
271330-1040025	SCO Frameset Addict RC Pro DI2 18 Wty black/yellow 2XL61
271331-1040019	SCO Frameset Addict RC Pro Mech 18 Wty black/yellow XXS47
271331-1040020	SCO Frameset Addict RC Pro Mech 18 Wty black/yellow XS49
271331-1040021	SCO Frameset Addict RC Pro Mech 18 Wty black/yellow S52
271331-1040022	SCO Frameset Addict RC Pro Mech 18 Wty black/yellow M54
271331-1040023	SCO Frameset Addict RC Pro Mech 18 Wty black/yellow L56
271331-1040024	SCO Frameset Addict RC Pro Mech 18 Wty black/yellow XL58

271331-1040025	SCO Frameset Addict RC Pro Mech 18 Wty black/yellow 2XL61
273270-1040019	SCO Frameset Foil RC 18 Wty black/yellow XXS47
273270-1040020	SCO Frameset Foil RC 18 Wty black/yellow XS49
273270-1040021	SCO Frameset Foil RC 18 Wty black/yellow S52
273270-1040022	SCO Frameset Foil RC 18 Wty black/yellow M54
273270-1040023	SCO Frameset Foil RC 18 Wty black/yellow L56
273270-1040024	SCO Frameset Foil RC 18 Wty black/yellow XL58
273270-1040025	SCO Frameset Foil RC 18 Wty black/yellow 2XL61
278421-0001222	SCO E-bike Chainguard Hesling BO Sub 18 black 1size

Spare parts 2019

Article number	Description
271017-0001006	SCO Front triangle Spark RC 900 SL 19 black S
271017-0001007	SCO Front triangle Spark RC 900 SL 19 black M
271017-0001008	SCO Front triangle Spark RC 900 SL 19 black L
271017-0001009	SCO Front triangle Spark RC 900 SL 19 black XL
271018-1017006	SCO Front triangle Spark RC 900 W/C 19 yellow/black S
271018-1017007	SCO Front triangle Spark RC 900 W/C 19 yellow/black M
271018-1017008	SCO Front triangle Spark RC 900 W/C 19 yellow/black L
271018-1017009	SCO Front triangle Spark RC 900 W/C 19 yellow/black XL
271019-1042006	SCO Front triangle Spark RC 900 pro 19 black/red S
271019-1042007	SCO Front triangle Spark RC 900 pro 19 black/red M
271019-1042008	SCO Front triangle Spark RC 900 pro 19 black/red L
271019-1042009	SCO Front triangle Spark RC 900 pro 19 black/red XL
271020-1008006	SCO Front triangle Spark RC 900 team 19 orange/black S
271020-1008007	SCO Front triangle Spark RC 900 team 19 orange/black M
271020-1008008	SCO Front triangle Spark RC 900 team 19 orange/black L
271020-1008009	SCO Front triangle Spark RC 900 team 19 orange/black XL
271021-1017006	SCO Front triangle Spark RC 900 Comp 19 yellow/black S
271021-1017007	SCO Front triangle Spark RC 900 Comp 19 yellow/black M
271021-1017008	SCO Front triangle Spark RC 900 Comp 19 yellow/black L
271021-1017009	SCO Front triangle Spark RC 900 Comp 19 yellow/black XL
271022-6268006	SCO Front triangle Spark 900 Ult 19 bk/bronze S
271022-6268007	SCO Front triangle Spark 900 Ult 19 bk/bronze M
271022-6268008	SCO Front triangle Spark 900 Ult 19 bk/bronze L
271022-6268009	SCO Front triangle Spark 900 Ult 19 bk/bronze XL
271023-1049006	SCO Front triangle Spark 900 PR 19 grey/red S
271023-1049007	SCO Front triangle Spark 900 PR 19 grey/red M
271023-1049008	SCO Front triangle Spark 900 PR 19 grey/red L
271023-1049009	SCO Front triangle Spark 900 PR 19 grey/red XL
271024-6268006	SCO Front triangle Spark 910 19 bk/bronze S
271024-6268007	SCO Front triangle Spark 910 19 bk/bronze M
271024-6268008	SCO Front triangle Spark 910 19 bk/bronze L
271024-6268009	SCO Front triangle Spark 910 19 bk/bronze XL
271025-1040006	SCO Front triangle Spark 920 19 black/yellow S
271025-1040007	SCO Front triangle Spark 920 19 black/yellow M
271025-1040008	SCO Front triangle Spark 920 19 black/yellow L
271025-1040009	SCO Front triangle Spark 920 19 black/yellow XL
271026-1049006	SCO Front triangle Spark 930 19 grey/red S
271026-1049007	SCO Front triangle Spark 930 19 grey/red M
271026-1049008	SCO Front triangle Spark 930 19 grey/red L
271026-1049009	SCO Front triangle Spark 930 19 grey/red XL
271027-6268006	SCO Front triangle Genius 900 Ult 19 bk/bronze S
271027-6268007	SCO Front triangle Genius 900 Ult 19 bk/bronze M
271027-6268008	SCO Front triangle Genius 900 Ult 19 bk/bronze L
271027-6268009	SCO Front triangle Genius 900 Ult 19 bk/bronze XL
271028-1229006	SCO Front triangle Genius 900 Tuned 19 orng/grn S
271028-1229007	SCO Front triangle Genius 900 Tuned 19 orng/grn M
271028-1229008	SCO Front triangle Genius 900 Tuned 19 orng/grn L
271028-1229009	SCO Front triangle Genius 900 Tuned 19 orng/grn XL
271029-0001006	SCO Front triangle Genius 9/710 19 black S
271029-0001007	SCO Front triangle Genius 9/710 19 black M
271029-0001008	SCO Front triangle Genius 9/710 19 black L
271029-0001009	SCO Front triangle Genius 9/710 19 black XL
271030-6269006	SCO Front triangle Genius 920 19 gr/bronze S
271030-6269007	SCO Front triangle Genius 920 19 gr/bronze M

271030-6269008	SCO Front triangle Genius 920 19 gr/bronze L
271030-6269009	SCO Front triangle Genius 920 19 gr/bronze XL
271031-1229006	SCO Front triangle Genius 9/730 19 orng/grn S
271031-1229007	SCO Front triangle Genius 9/730 19 orng/grn M
271031-1229008	SCO Front triangle Genius 9/730 19 orng/grn L
271031-1229009	SCO Front triangle Genius 9/730 19 orng/grn XL
271032-1229006	SCO Front triangle Ransom 9/700 Tuned 19 orng/grn S
271032-1229007	SCO Front triangle Ransom 9/700 Tuned 19 orng/grn M
271032-1229008	SCO Front triangle Ransom 9/700 Tuned 19 orng/grn L
271032-1229009	SCO Front triangle Ransom 9/700 Tuned 19 orng/grn XL
271033-6269006	SCO Front triangle Ransom 910 19 gr/bronze S
271033-6269007	SCO Front triangle Ransom 910 19 gr/bronze M
271033-6269008	SCO Front triangle Ransom 910 19 gr/bronze L
271033-6269009	SCO Front triangle Ransom 910 19 gr/bronze XL
271034-1172006	SCO Front triangle Gambler 710 19 green/orange S
271034-1172007	SCO Front triangle Gambler 710 19 green/orange M
271034-1172008	SCO Front triangle Gambler 710 19 green/orange L
271035-1098006	SCO Front triangle Gambler 720 19 black/beige S
271035-1098007	SCO Front triangle Gambler 720 19 black/beige M
271035-1098008	SCO Front triangle Gambler 720 19 black/beige L
271036-1229006	SCO Front triangle Gambler 730 19 orng/grn S
271036-1229007	SCO Front triangle Gambler 730 19 orng/grn M
271036-1229008	SCO Front triangle Gambler 730 19 orng/grn L
271037-1459006	SCO Front triangle Cont Spark RC 900 19 green/red S
271037-1459007	SCO Front triangle Cont Spark RC 900 19 green/red M
271037-1459008	SCO Front triangle Cont Spark RC 900 19 green/red L
271038-1039006	SCO Front triangle Cont Spark 910 19 white/grey S
271038-1039007	SCO Front triangle Cont Spark 910 19 white/grey M
271038-1039008	SCO Front triangle Cont Spark 910 19 white/grey L
271039-6270006	SCO Front triangle Cont Genius 710 19 bronze/bk S
271039-6270007	SCO Front triangle Cont Genius 710 19 bronze/bk M
271039-6270008	SCO Front triangle Cont Genius 710 19 bronze/bk L

271040-1019006	SCO Front triangle Spark eRide 910 19 grey/black S
271040-1019007	SCO Front triangle Spark eRide 910 19 grey/black M
271040-1019008	SCO Front triangle Spark eRide 910 19 grey/black L
271040-1019009	SCO Front triangle Spark eRide 910 19 grey/black XL
271041-1042006	SCO Front triangle Spark eRide 920 19 black/red S
271041-1042007	SCO Front triangle Spark eRide 920 19 black/red M
271041-1042008	SCO Front triangle Spark eRide 920 19 black/red L
271041-1042009	SCO Front triangle Spark eRide 920 19 black/red XL
271042-1008006	SCO Front triangle Spark eRide 930 19 orange/black S
271042-1008007	SCO Front triangle Spark eRide 930 19 orange/black M
271042-1008008	SCO Front triangle Spark eRide 930 19 orange/black L
271042-1008009	SCO Front triangle Spark eRide 930 19 orange/black XL
271043-1089006	SCO Front triangle Strike eRide 9/710 19 green/black S
271043-1089007	SCO Front triangle Strike eRide 9/710 19 green/black M
271043-1089008	SCO Front triangle Strike eRide 9/710 19 green/black L
271043-1089009	SCO Front triangle Strike eRide 9/710 19 green/black XL
271044-6167006	SCO Front triangle Strike eRide 9/720 19 dark bronze S
271044-6167007	SCO Front triangle Strike eRide 9/720 19 dark bronze M
271044-6167008	SCO Front triangle Strike eRide 9/720 19 dark bronze L
271044-6167009	SCO Front triangle Strike eRide 9/720 19 dark bronze XL
271045-1019006	SCO Front triangle Strike eRide 9/730 19 grey/black S
271045-1019007	SCO Front triangle Strike eRide 9/730 19 grey/black M
271045-1019008	SCO Front triangle Strike eRide 9/730 19 grey/black L
271045-1019009	SCO Front triangle Strike eRide 9/730 19 grey/black XL
271046-1229006	SCO Front triangle Genius eRide 900T 19 orng/grn S
271046-1229007	SCO Front triangle Genius eRide 900T 19 orng/grn M
271046-1229008	SCO Front triangle Genius eRide 900T 19 orng/grn L
271046-1229009	SCO Front triangle Genius eRide 900T 19 orng/grn XL
271047-0011006	SCO Front triangle Genius eRide 9/710 19 grey S
271047-0011007	SCO Front triangle Genius eRide 9/710 19 grey M
271047-0011008	SCO Front triangle Genius eRide 9/710 19 grey L
271047-0011009	SCO Front triangle Genius eRide 9/710 19 grey XL

271048-2278006	SCO Front triangle Genius eRide 9/720 19 green/blue S
271048-2278007	SCO Front triangle Genius eRide 9/720 19 green/blue M
271048-2278008	SCO Front triangle Genius eRide 9/720 19 green/blue L
271048-2278009	SCO Front triangle Genius eRide 9/720 19 green/blue XL
271049-0014006	SCO Front triangle Axis eRide Evo 19 Wty bronze S
271049-0014007	SCO Front triangle Axis eRide Evo 19 Wty bronze M
271049-0014008	SCO Front triangle Axis eRide Evo 19 Wty bronze L
271049-0014009	SCO Front triangle Axis eRide Evo 19 Wty bronze XL
271050-1042006	SCO Frame Spark 940 19 Wty black/red S
271050-1042007	SCO Frame Spark 940 19 Wty black/red M
271050-1042008	SCO Frame Spark 940 19 Wty black/red L
271050-1042009	SCO Frame Spark 940 19 Wty black/red XL
271051-1008006	SCO Frame Spark 960 19 Wty orange/black S
271051-1008007	SCO Frame Spark 960 19 Wty orange/black M
271051-1008008	SCO Frame Spark 960 19 Wty orange/black L
271051-1008009	SCO Frame Spark 960 19 Wty orange/black XL
271052-1019006	SCO Frame Genius 940/750 19 Wty grey/black S
271052-1019007	SCO Frame Genius 940/750 19 Wty grey/black M
271052-1019008	SCO Frame Genius 940/750 19 Wty grey/black L
271052-1019009	SCO Frame Genius 940/750 19 Wty grey/black XL
271053-1019006	SCO Frame Ransom 9/720 19 Wty grey/black S
271053-1019007	SCO Frame Ransom 9/720 19 Wty grey/black M
271053-1019008	SCO Frame Ransom 9/720 19 Wty grey/black L
271053-1019009	SCO Frame Ransom 9/720 19 Wty grey/black XL
271054-1001006	SCO Frame Scale 900 RC SL 19 Wty black/grey S
271054-1001007	SCO Frame Scale 900 RC SL 19 Wty black/grey M
271054-1001008	SCO Frame Scale 900 RC SL 19 Wty black/grey L
271054-1001009	SCO Frame Scale 900 RC SL 19 Wty black/grey XL
271055-1040006	SCO Frame Scale 900 RC W/C 19 Wty black/yellow S
271055-1040007	SCO Frame Scale 900 RC W/C 19 Wty black/yellow M
271055-1040008	SCO Frame Scale 900 RC W/C 19 Wty black/yellow L
271055-1040009	SCO Frame Scale 900 RC W/C 19 Wty black/yellow XL

271056-1042006	SCO Frame Scale 900 RC Pro 19 Wty black/red S
271056-1042007	SCO Frame Scale 900 RC Pro 19 Wty black/red M
271056-1042008	SCO Frame Scale 900 RC Pro 19 Wty black/red L
271056-1042009	SCO Frame Scale 900 RC Pro 19 Wty black/red XL
271057-1017006	SCO Frame Scale 900 RC Team 19 Wty yellow/black S
271057-1017007	SCO Frame Scale 900 RC Team 19 Wty yellow/black M
271057-1017008	SCO Frame Scale 900 RC Team 19 Wty yellow/black L
271057-1017009	SCO Frame Scale 900 RC Team 19 Wty yellow/black XL
271058-1042006	SCO Frame Scale 910 19 Wty black/red S
271058-1042007	SCO Frame Scale 910 19 Wty black/red M
271058-1042008	SCO Frame Scale 910 19 Wty black/red L
271058-1042009	SCO Frame Scale 910 19 Wty black/red XL
271059-1001006	SCO Frame Scale 950 19 Wty black/grey S
271059-1001007	SCO Frame Scale 950 19 Wty black/grey M
271059-1001008	SCO Frame Scale 950 19 Wty black/grey L
271059-1001009	SCO Frame Scale 950 19 Wty black/grey XL
271059-1001010	SCO Frame Scale 950 19 Wty black/grey XXL
271060-1008006	SCO Frame Scale 960 19 Wty orange/black S
271060-1008007	SCO Frame Scale 960 19 Wty orange/black M
271060-1008008	SCO Frame Scale 960 19 Wty orange/black L
271060-1008009	SCO Frame Scale 960 19 Wty orange/black XL
271060-1008010	SCO Frame Scale 960 19 Wty orange/black XXL
271061-6268192	SCO Frame Voltage YZ 0.1 19 Wty bk/bronze 20"
271062-1172006	SCO Frame Aspect 900 19 Wty green/orange S
271062-1172007	SCO Frame Aspect 900 19 Wty green/orange M
271062-1172008	SCO Frame Aspect 900 19 Wty green/orange L
271062-1172009	SCO Frame Aspect 900 19 Wty green/orange XL
271062-1172010	SCO Frame Aspect 900 19 Wty green/orange XXL
271063-1001006	SCO Frame Aspect 910 19 Wty black/grey S
271063-1001007	SCO Frame Aspect 910 19 Wty black/grey M
271063-1001008	SCO Frame Aspect 910 19 Wty black/grey L
271063-1001009	SCO Frame Aspect 910 19 Wty black/grey XL

271063-1001010	SCO Frame Aspect 910 19 Wty black/grey XXL
271064-1034006	SCO Frame Aspect 730 19 Wty blue/black S
271064-1034007	SCO Frame Aspect 730 19 Wty blue/black M
271064-1034008	SCO Frame Aspect 730 19 Wty blue/black L
271064-1034009	SCO Frame Aspect 730 19 Wty blue/black XL
271065-1000006	SCO Frame Aspect 900 LTD 19 Wty black/silver S
271065-1000007	SCO Frame Aspect 900 LTD 19 Wty black/silver M
271065-1000008	SCO Frame Aspect 900 LTD 19 Wty black/silver L
271065-1000009	SCO Frame Aspect 900 LTD 19 Wty black/silver XL
271065-1000010	SCO Frame Aspect 900 LTD 19 Wty black/silver XXL
271066-1000006	SCO Frame Aspect 700 LTD 19 Wty black/silver S
271066-1000007	SCO Frame Aspect 700 LTD 19 Wty black/silver M
271066-1000008	SCO Frame Aspect 700 LTD 19 Wty black/silver L
271066-1000009	SCO Frame Aspect 700 LTD 19 Wty black/silver XL
271067-1040006	SCO Frame Cont Scale 900 RC 19 Wty black/yellow S
271067-1040007	SCO Frame Cont Scale 900 RC 19 Wty black/yellow M
271067-1040008	SCO Frame Cont Scale 900 RC 19 Wty black/yellow L
271068-0002006	SCO Frame Cont Scale 900 19 Wty white S
271068-0002007	SCO Frame Cont Scale 900 19 Wty white M
271068-0002008	SCO Frame Cont Scale 900 19 Wty white L
271069-0003879	SCO Frame Cont Scale 10 19 Wty blue S7
271069-0003881	SCO Frame Cont Scale 10 19 Wty blue M9
271069-0003882	SCO Frame Cont Scale 10 19 Wty blue L9
271069-0003888	SCO Frame Cont Scale 10 19 Wty blue XS7
271070-1039879	SCO Frame Cont Scale 20 19 Wty white/grey S7
271070-1039881	SCO Frame Cont Scale 20 19 Wty white/grey M9
271070-1039882	SCO Frame Cont Scale 20 19 Wty white/grey L9
271070-1039888	SCO Frame Cont Scale 20 19 Wty white/grey XS7
271071-1001006	SCO Frame Cont Spark 920 19 Wty black/grey S
271071-1001007	SCO Frame Cont Spark 920 19 Wty black/grey M
271071-1001008	SCO Frame Cont Spark 920 19 Wty black/grey L
271072-1042006	SCO Frame Cont Spark 930 19 Wty black/red S
271072-1042007	SCO Frame Cont Spark 930 19 Wty black/red M
271072-1042008	SCO Frame Cont Spark 930 19 Wty black/red L
271073-0003006	SCO Frame Cont Genius 720 19 Wty blue S
271073-0003007	SCO Frame Cont Genius 720 19 Wty blue M
271073-0003008	SCO Frame Cont Genius 720 19 Wty blue L
271074-1007005	SCO Frame Cont 710 19 Wty black/white XS
271074-1007006	SCO Frame Cont 710 19 Wty black/white S
271074-1007007	SCO Frame Cont 710 19 Wty black/white M
271074-1007008	SCO Frame Cont 710 19 Wty black/white L
271075-1040005	SCO Frame Scale 700 Alloy 19 Wty black/yellow XS
271075-1040006	SCO Frame Scale 700 Alloy 19 Wty black/yellow S
271075-1040007	SCO Frame Scale 700 Alloy 19 Wty black/yellow M
271076-1040006	SCO Frame Scale pro Carb 700 19 Wty black/yellow S
271077-1009005	SCO Frame Spark 700 Alloy 19 Wty black/orange XS
271077-1009006	SCO Frame Spark 700 Alloy 19 Wty black/orange S
271078-1040005	SCO Frame Spark 600 19 Wty black/yellow XS
271079-0006006	SCO Frame Cont 600 19 Wty green S
271080-0003006	SCO Frame Cont 610 19 Wty blue S
271081-1040193	SCO Frame Scale RC JR 24 D 19 Wty black/yellow 24"
271082-0001193	SCO Frame Roxter eRide 24 19 Wty black 24"
271083-0006194	SCO Frame Roxter eRide 26 19 Wty green 26"
271084-1043879	SCO Frame Aspect eRide 10 19 Wty black/green S7
271084-1043881	SCO Frame Aspect eRide 10 19 Wty black/green M9
271084-1043882	SCO Frame Aspect eRide 10 19 Wty black/green L9
271084-1043883	SCO Frame Aspect eRide 10 19 Wty black/green XL9
271086-0001879	SCO Frame Axis eRide 10 19 Wty black S7
271086-0001881	SCO Frame Axis eRide 10 19 Wty black M9
271086-0001882	SCO Frame Axis eRide 10 19 Wty black L9
271086-0001883	SCO Frame Axis eRide 10 19 Wty black XL9
271087-0014879	SCO Frame Axis eRide 20 Lady 19 WTY bronze S7
271087-0014881	SCO Frame Axis eRide 20 Lady 19 WTY bronze M9
271087-0014882	SCO Frame Axis eRide 20 Lady 19 WTY bronze L9

271088-1039006	SCO Frame Cont Spark eRide 710 19 Wty white/grey S
271088-1039007	SCO Frame Cont Spark eRide 710 19 Wty white/grey M
271088-1039008	SCO Frame Cont Spark eRide 710 19 Wty white/grey L
271089-1039006	SCO Frame Cont Strike eRide 710 19 Wty white/grey S
271089-1039007	SCO Frame Cont Strike eRide 710 19 Wty white/grey M
271089-1039008	SCO Frame Cont Strike eRide 710 19 Wty white/grey L
271090-6268006	SCO Frame Cont Genius eRide 710 19 Wty bk/bronze S
271090-6268007	SCO Frame Cont Genius eRide 710 19 Wty bk/bronze M
271090-6268008	SCO Frame Cont Genius eRide 710 19 Wty bk/bronze L
271091-1199879	SCO Frame Cont Aspect eRide 10 19 Wty grey/white S7
271091-1199881	SCO Frame Cont Aspect eRide 10 19 Wty grey/white M9
271091-1199882	SCO Frame Cont Aspect eRide 10 19 Wty grey/white L9
271092-0006193	SCO Frame Roxter 24 19 Wty green 24"
271093-0003192	SCO Frameset Scale JR 20 rigid 19 Wty blue 20"
271094-0003193	SCO Frameset Scale JR 24 rigid 19 Wty blue 24"
271095-0003192	SCO Frameset Volt-X 10 19 Wty blue 20"
271096-0002193	SCO Frameset Cont 24 Rigid 19 Wty white 24"
271097-0002193	SCO Frameset Cont 20 Rigid 19 Wty white 24"
271098-6268222	SCO Chainstays Genius 900 Ult 19 bk/bronze 1size
271099-1229222	SCO Chainstays Genius 900 Tuned 19 orng/grn 1size
271100-0001222	SCO Chainstays Genius 9/710 19 black 1size
271101-6269222	SCO Chainstays Genius 920 19 gr/bronze 1size
271102-1229222	SCO Chainstays Genius 9/730 19 orng/grn 1size
271103-1229222	SCO Chainstays Ransom 9/700 Tuned 19 orng/grn 1size
271104-6269222	SCO Chainstays Ransom 910 19 gr/bronze 1size
271105-6270222	SCO Chainstays Cont Genius 710 19 bronze/bk 1size
271106-1019222	SCO Chainstays Spark eRide 910 19 grey/black 1size
271107-1042222	SCO Chainstays Spark eRide 920 19 black/red 1size
271108-1008222	SCO Chainstays Spark eRide 930 19 orange/black 1size
271109-1089222	SCO Chainstays Strike eRide 9/710 19 green/black 1size
271110-6167222	SCO Chainstays Strike eRide 9/720 19 dark bronze 1size
271111-1019222	SCO Chainstays Strike eRide 9/730 19 grey/black 1size
271112-1229222	SCO Chainstays Genius eRide 900T 19 orng/grn 1size
271113-0011222	SCO Chainstays Genius eRide 9/710 19 grey 1size
271114-2278222	SCO Chainstays Genius eRide 9/720 19 green/blue 1size
271115-0014222	SCO Chainstays Axis eRide Evo 19 Wty bronze 1size
271116-6268222	SCO Seatstays Genius 900 Ult 19 bk/bronze 1size
271117-1229222	SCO Seatstays Genius 900 Tuned 19 orng/grn 1size
271118-0001222	SCO Seatstays Genius 9/710 19 black 1size
271119-6269222	SCO Seatstays Genius 920 19 gr/ bronze 1size
271120-1229222	SCO Seatstays Genius 9/730 19 orng/grn 1size
271121-1229222	SCO Seatstays Ransom 9/700 Tuned 19 orng/grn 1size
271122-6269222	SCO Seatstays Ransom 910 19 gr/bronze 1size
271123-1001222	SCO Seatstays Cont Genius 710 19 black/grey 1size
271124-1019222	SCO Seatstays Spark eRide 910 19 grey/black 1size
271125-1042222	SCO Seatstays Spark eRide 920 19 black/red 1size
271126-1008222	SCO Seatstays Spark eRide 930 19 orange/black 1size
271127-1089222	SCO Seatstays Strike eRide 9/710 19 green/black 1size
271128-6167222	SCO Seatstays Strike eRide 9/720 19 dark bronze 1size
271129-1019222	SCO Seatstays Strike eRide 9/730 19 grey/black 1size
271130-1229222	SCO Seatstays Genius eRide 900T 19 orng/grn 1size
271131-0011222	SCO Seatstays Genius eRide 9/710 19 grey 1size
271132-2278222	SCO Seatstays Genius eRide 9/720 19 green/blue 1size
271133-0014222	SCO Seatstays Axis eRide Evo 19 Wty bronze 1size
271134-0001222	SCO Swingarm Spark RC 900 SL 19 black 1size
271135-1017222	SCO Swingarm Spark RC W/C 19 yellow/black 1size
271136-1042222	SCO Swingarm Spark RC 900 pro 19 black/red 1size
271137-1008222	SCO Swingarm Spark RC 900 team 19 orange/black 1size
271138-1017222	SCO Swingarm Spark RC 900 Comp 19 yellow/black 1size
271139-6268222	SCO Swingarm Spark 900 Ult 19 bk/bronze 1size
271140-1049222	SCO Swingarm Spark 900 PR 19 grey/red 1size
271141-6268222	SCO Swingarm Spark 910 19 bk/ bronze 1size
271142-1040222	SCO Swingarm Spark 920 19 black/yellow 1size
271143-1049222	SCO Swingarm Spark 930 19 grey/red 1size

271144-1172222	SCO Swingarm Gambler 710 19 green/orange 1size
271145-1098222	SCO Swingarm Gambler 720 19 black/beige 1size
271146-1229222	SCO Swingarm Gambler 730 19 orng/grn 1size
271147-1459222	SCO Swingarm Cont Spark RC 900 19 green/red 1size
271148-1039222	SCO Swingarm Cont Spark 910 19 white/grey 1size
271149-1019022	SCO Frameset Plasma RC 19 Wty grey/black M54
271149-1019885	SCO Frameset Plasma RC 19 Wty grey/black S51
271149-1019886	SCO Frameset Plasma RC 19 Wty grey/black L57
271149-1019887	SCO Frameset Plasma RC 19 Wty grey/black XL60
271150-1018020	SCO Frameset Plasma 10 19 Wty red/black XS49
271150-1018022	SCO Frameset Plasma 10 19 Wty red/black M54
271150-1018885	SCO Frameset Plasma 10 19 Wty red/black S51
271150-1018886	SCO Frameset Plasma 10 19 Wty red/black L57
271150-1018887	SCO Frameset Plasma 10 19 Wty red/black XL60
271151-1019019	SCO Frameset Foil RC D 19 Wty grey/black XXS47
271151-1019020	SCO Frameset Foil RC D 19 Wty grey/black XS49
271151-1019021	SCO Frameset Foil RC D 19 Wty grey/black S52
271151-1019022	SCO Frameset Foil RC D 19 Wty grey/black M54
271151-1019023	SCO Frameset Foil RC D 19 Wty grey/black L56
271151-1019024	SCO Frameset Foil RC D 19 Wty grey/black XL58
271151-1019025	SCO Frameset Foil RC D 19 Wty grey/black 2XL61
271152-0014019	SCO Frameset Foil 10 D 19 Wty bronze XXS47
271152-0014020	SCO Frameset Foil 10 D 19 Wty bronze XS49
271152-0014021	SCO Frameset Foil 10 D 19 Wty bronze S52
271152-0014022	SCO Frameset Foil 10 D 19 Wty bronze M54
271152-0014023	SCO Frameset Foil 10 D 19 Wty bronze L56
271152-0014024	SCO Frameset Foil 10 D 19 Wty bronze XL58
271152-0014025	SCO Frameset Foil 10 D 19 Wty bronze 2XL61
271153-0014019	SCO Frameset Foil 10 19 Wty bronze XXS47
271153-0014020	SCO Frameset Foil 10 19 Wty bronze XS49
271153-0014021	SCO Frameset Foil 10 19 Wty bronze S52
271153-0014022	SCO Frameset Foil 10 19 Wty bronze M54
271153-0014023	SCO Frameset Foil 10 19 Wty bronze L56
271153-0014024	SCO Frameset Foil 10 19 Wty bronze XL58
271153-0014025	SCO Frameset Foil 10 19 Wty bronze 2XL61
271154-1019019	SCO Frameset Addict RC Pro D 19 Wty grey/black XXS47
271154-1019020	SCO Frameset Addict RC Pro D 19 Wty grey/black XS49
271154-1019021	SCO Frameset Addict RC Pro D 19 Wty grey/black S52
271154-1019022	SCO Frameset Addict RC Pro D 19 Wty grey/black M54
271154-1019023	SCO Frameset Addict RC Pro D 19 Wty grey/black L56
271154-1019024	SCO Frameset Addict RC Pro D 19 Wty grey/black XL58
271154-1019025	SCO Frameset Addict RC Pro D 19 Wty grey/black 2XL61
271155-1040019	SCO Frameset Addict RC 10 D 19 Wty black/yellow XXS47
271155-1040020	SCO Frameset Addict RC 10 D 19 Wty black/yellow XS49
271155-1040021	SCO Frameset Addict RC 10 D 19 Wty black/yellow S52
271155-1040022	SCO Frameset Addict RC 10 D 19 Wty black/yellow M54
271155-1040023	SCO Frameset Addict RC 10 D 19 Wty black/yellow L56
271155-1040024	SCO Frameset Addict RC 10 D 19 Wty black/yellow XL58
271155-1040025	SCO Frameset Addict RC 10 D 19 Wty black/yellow 2XL61
271156-1040019	SCO Frameset Addict RC 10 19 Wty black/yellow XXS47
271156-1040020	SCO Frameset Addict RC 10 19 Wty black/yellow XS49
271156-1040021	SCO Frameset Addict RC 10 19 Wty black/yellow S52
271156-1040022	SCO Frameset Addict RC 10 19 Wty black/yellow M54
271156-1040023	SCO Frameset Addict RC 10 19 Wty black/yellow L56
271156-1040024	SCO Frameset Addict RC 10 19 Wty black/yellow XL58
271156-1040025	SCO Frameset Addict RC 10 19 Wty black/yellow 2XL61
271157-1019019	SCO Frameset Addict SE D 19 Wty grey/black XXS47
271157-1019020	SCO Frameset Addict SE D 19 Wty grey/black XS49
271157-1019021	SCO Frameset Addict SE D 19 Wty grey/black S52
271157-1019022	SCO Frameset Addict SE D 19 Wty grey/black M54
271157-1019023	SCO Frameset Addict SE D 19 Wty grey/black L56
271157-1019024	SCO Frameset Addict SE D 19 Wty grey/black XL58
271157-1019025	SCO Frameset Addict SE D 19 Wty grey/black 2XL61
271158-1040019	SCO Frameset Addict 10 19 Wty black/yellow XXS47

271158-1040020	SCO Frameset Addict 10 19 Wty black/yellow XS49
271158-1040021	SCO Frameset Addict 10 19 Wty black/yellow S52
271158-1040022	SCO Frameset Addict 10 19 Wty black/yellow M54
271158-1040023	SCO Frameset Addict 10 19 Wty black/yellow L56
271158-1040024	SCO Frameset Addict 10 19 Wty black/yellow XL58
271158-1040025	SCO Frameset Addict 10 19 Wty black/yellow 2XL61
271159-1007019	SCO Frameset Addict 30 D 19 Wty black/white XXS47
271159-1007020	SCO Frameset Addict 30 D 19 Wty black/white XS49
271159-1007021	SCO Frameset Addict 30 D 19 Wty black/white S52
271159-1007022	SCO Frameset Addict 30 D 19 Wty black/white M54
271159-1007023	SCO Frameset Addict 30 D 19 Wty black/white L56
271159-1007024	SCO Frameset Addict 30 D 19 Wty black/white XL58
271159-1007025	SCO Frameset Addict 30 D 19 Wty black/white 2XL61
271160-0011019	SCO Frameset Speedster 10 19 Wty grey XXS47
271160-0011020	SCO Frameset Speedster 10 19 Wty grey XS49
271160-0011021	SCO Frameset Speedster 10 19 Wty grey S52
271160-0011022	SCO Frameset Speedster 10 19 Wty grey M54
271160-0011023	SCO Frameset Speedster 10 19 Wty grey L56
271160-0011024	SCO Frameset Speedster 10 19 Wty grey XL58
271160-0011025	SCO Frameset Speedster 10 19 Wty grey 2XL61
271161-0011019	SCO Frameset Speedster 10 D 19 Wty grey XXS47
271161-0011020	SCO Frameset Speedster 10 D 19 Wty grey XS49
271161-0011021	SCO Frameset Speedster 10 D 19 Wty grey S52
271161-0011022	SCO Frameset Speedster 10 D 19 Wty grey M54
271161-0011023	SCO Frameset Speedster 10 D 19 Wty grey L56
271161-0011024	SCO Frameset Speedster 10 D 19 Wty grey XL58
271161-0011025	SCO Frameset Speedster 10 D 19 Wty grey 2XL61
271162-0006019	SCO Frameset Metrix 30 D 19 Wty green XXS47
271162-0006020	SCO Frameset Metrix 30 D 19 Wty green XS49
271162-0006021	SCO Frameset Metrix 30 D 19 Wty green S52
271162-0006022	SCO Frameset Metrix 30 D 19 Wty green M54
271162-0006023	SCO Frameset Metrix 30 D 19 Wty green L56
271162-0006024	SCO Frameset Metrix 30 D 19 Wty green XL58
271162-0006025	SCO Frameset Metrix 30 D 19 Wty green 2XL61
271163-0006020	SCO Frameset Addict Gravel 20 19 Wty green XS49
271163-0006021	SCO Frameset Addict Gravel 20 19 Wty green S52
271163-0006022	SCO Frameset Addict Gravel 20 19 Wty green M54
271163-0006023	SCO Frameset Addict Gravel 20 19 Wty green L56
271163-0006024	SCO Frameset Addict Gravel 20 19 Wty green XL58
271164-0011019	SCO Frameset Speedster Gravel 10 19 Wty grey XXS47
271164-0011020	SCO Frameset Speedster Gravel 10 19 Wty grey XS49
271164-0011021	SCO Frameset Speedster Gravel 10 19 Wty grey S52
271164-0011022	SCO Frameset Speedster Gravel 10 19 Wty grey M54
271164-0011023	SCO Frameset Speedster Gravel 10 19 Wty grey L56
271164-0011024	SCO Frameset Speedster Gravel 10 19 Wty grey XL58
271164-0011025	SCO Frameset Speedster Gravel 10 19 Wty grey 2XL61
271165-1039019	SCO Frameset Cont Addict RC D 19 Wty white/grey XXS47
271165-1039020	SCO Frameset Cont Addict RC D 19 Wty white/grey XS49
271165-1039021	SCO Frameset Cont Addict RC D 19 Wty white/grey S52
271165-1039022	SCO Frameset Cont Addict RC D 19 Wty white/grey M54
271165-1039023	SCO Frameset Cont Addict RC D 19 Wty white/grey L56
271166-1004019	SCO Frameset Cont Addict 15 D 19 Wty black/blue XXS47
271166-1004020	SCO Frameset Cont Addict 15 D 19 Wty black/blue XS49
271166-1004021	SCO Frameset Cont Addict 15 D 19 Wty black/blue S52
271166-1004022	SCO Frameset Cont Addict 15 D 19 Wty black/blue M54
271166-1004023	SCO Frameset Cont Addict 15 D 19 Wty black/blue L56
271167-1004019	SCO Frameset Cont Speedster 15 19 Wty black/blue XXS47
271167-1004020	SCO Frameset Cont Speedster 15 19 Wty black/blue XS49
271167-1004021	SCO Frameset Cont Speedster 15 19 Wty black/blue S52
271167-1004022	SCO Frameset Cont Speedster 15 19 Wty black/blue M54
271167-1004023	SCO Frameset Cont Speedster 15 19 Wty black/blue L56
271168-1004019	SCO Frameset Cont Speedster Gravel 15 19 black/blue XXS47
271168-1004020	SCO Frameset Cont Speedster Gravel 15 19 black/blue XS49
271168-1004021	SCO Frameset Cont Speedster Gravel 15 19 black/blue S52

271168-1004022	SCO Frameset Cont Speedster Gravel 15 19 black/blue M54
271168-1004023	SCO Frameset Cont Speedster Gravel 15 19 black/blue L56
271169-0001006	SCO Frame Sub Sport eRide men 19 Wty black S
271169-0001007	SCO Frame Sub Sport eRide men 19 Wty black M
271169-0001008	SCO Frame Sub Sport eRide men 19 Wty black L
271169-0001009	SCO Frame Sub Sport eRide men 19 Wty black XL
271170-0001006	SCO Frame Sub Sport eRide lady 19 Wty black S
271170-0001007	SCO Frame Sub Sport eRide lady 19 Wty black M
271170-0001008	SCO Frame Sub Sport eRide lady 19 Wty black L
271171-0001006	SCO Frame Sub Active eRide men 19 Wty black S
271171-0001007	SCO Frame Sub Active eRide men 19 Wty black M
271171-0001008	SCO Frame Sub Active eRide men 19 Wty black L
271171-0001009	SCO Frame Sub Active eRide men 19 Wty black XL
271172-0001006	SCO Frame Sub Active eRide lady 19 Wty black S
271172-0001007	SCO Frame Sub Active eRide lady 19 Wty black M
271172-0001008	SCO Frame Sub Active eRide lady 19 Wty black L
271173-0011006	SCO Frame Sub Tour eRide 10 Uni 19 Wty grey S
271173-0011007	SCO Frame Sub Tour eRide 10 Uni 19 Wty grey M
271173-0011008	SCO Frame Sub Tour eRide 10 Uni 19 Wty grey L
271174-0011006	SCO Frame Sub Tour eRide 20 Uni 19 Wty grey S
271174-0011007	SCO Frame Sub Tour eRide 20 Uni 19 Wty grey M
271174-0011008	SCO Frame Sub Tour eRide 20 Uni 19 Wty grey L
271175-0001006	SCO Frame Sub Active eRide Uni 19 black S
271175-0001007	SCO Frame Sub Active eRide Uni 19 black M
271175-0001008	SCO Frame Sub Active eRide Uni 19 black L
271176-0001006	SCO Frame Sub Active eRide Uni rack 19 black S
271176-0001007	SCO Frame Sub Active eRide Uni rack 19 black M
271176-0001008	SCO Frame Sub Active eRide Uni rack 19 black L
271177-0011006	SCO Frame Sub Sport 10 men 19 Wty grey S
271177-0011007	SCO Frame Sub Sport 10 men 19 Wty grey M
271177-0011008	SCO Frame Sub Sport 10 men 19 Wty grey L
271177-0011009	SCO Frame Sub Sport 10 men 19 Wty grey XL
271178-0011006	SCO Frame Sub Sport 10 lady 19 Wty grey S
271178-0011007	SCO Frame Sub Sport 10 lady 19 Wty grey M
271178-0011008	SCO Frame Sub Sport 10 lady 19 Wty grey L
271179-0002006	SCO Frame Sub Comfort 10 uni 19 Wty white S
271179-0002007	SCO Frame Sub Comfort 10 uni 19 Wty white M
271179-0002008	SCO Frame Sub Comfort 10 uni 19 Wty white L
271180-0014006	SCO Frame Sub Comfort 20 men 19 wty bronze S
271180-0014007	SCO Frame Sub Comfort 20 men 19 wty bronze M
271180-0014008	SCO Frame Sub Comfort 20 men 19 wty bronze L
271181-0014006	SCO Frame Sub comfort 20 Uni 19 wty bronze S
271181-0014007	SCO Frame Sub comfort 20 Uni 19 wty bronze M
271181-0014008	SCO Frame Sub comfort 20 Uni 19 wty bronze L
271182-0011006	SCO Frame Sub cross 10 men 19 Wty grey S
271182-0011007	SCO Frame Sub cross 10 men 19 Wty grey M
271182-0011008	SCO Frame Sub cross 10 men 19 Wty grey L
271182-0011009	SCO Frame Sub cross 10 men 19 Wty grey XL
271182-0011010	SCO Frame Sub cross 10 men 19 Wty grey XXL
271183-0011006	SCO Frame Sub cross 10 lady 19 Wty grey S
271183-0011007	SCO Frame Sub cross 10 lady 19 Wty grey M
271183-0011008	SCO Frame Sub cross 10 lady 19 Wty grey L
271183-0011009	SCO Frame Sub cross 10 lady 19 Wty grey XL
271184-0011006	SCO Frame Silence eRide 10 lady 19 Wty grey S
271184-0011007	SCO Frame Silence eRide 10 lady 19 Wty grey M
271184-0011008	SCO Frame Silence eRide 10 lady 19 Wty grey L
271185-0011006	SCO Frame Silence eRide 10 men 19 Wty grey S
271185-0011007	SCO Frame Silence eRide 10 men 19 Wty grey M
271185-0011008	SCO Frame Silence eRide 10 men 19 Wty grey L
271185-0011009	SCO Frame Silence eRide 10 men 19 Wty grey XL
271186-1040022	SCO Fork Plasma PR 19 black/ yellow M54
271186-1040885	SCO Fork Plasma PR 19 black/ yellow S51
271186-1040886	SCO Fork Plasma PR 19 black/ yellow L57
271186-1040887	SCO Fork Plasma PR 19 black/ yellow XL60

271186-6167022	SCO Fork Plasma PR 19 dark bronze M54
271186-6167885	SCO Fork Plasma PR 19 dark bronze S51
271186-6167886	SCO Fork Plasma PR 19 dark bronze L57
271186-6167887	SCO Fork Plasma PR 19 dark bronze XL60
271187-1019022	SCO Fork Plasma RC 19 grey/ black M54
271187-1019885	SCO Fork Plasma RC 19 grey/ black S51
271187-1019886	SCO Fork Plasma RC 19 grey/ black L57
271187-1019887	SCO Fork Plasma RC 19 grey/ black XL60
271188-1018222	SCO Fork Plasma 10 19 red/black 1size
271189-0006222	SCO Fork Foil PR D 19 green 1size
271189-6167222	SCO Fork Foil PR D 19 dark bronze 1size
271190-1019222	SCO Fork Foil RC D 19 grey/ black 1size
271191-0014222	SCO Fork Foil 10 D 19 bronze 1size
271192-0014222	SCO Fork Foil 10 19 bronze 1size
271193-1015222	SCO Fork Foil 20 D 19 silver/ black 1size
271193-1017222	SCO Fork Foil 20 D 19 yellow/ black 1size
271194-1015222	SCO Fork Foil 20 19 silver/black 1size
271194-1017222	SCO Fork Foil 20 19 yellow/black 1size
271195-1018222	SCO Fork Foil 30 19 red/black 1size
271196-0014222	SCO Fork Addict RC PR D 19 bronze 1size
271197-1019222	SCO Fork Addict RC Pro D 19 grey/black 1size
271198-1040222	SCO Fork Addict RC 10 D 19 black/yellow 1size
271199-1040222	SCO Fork Addict RC 10 19 black/ yellow 1size
271200-0001222	SCO Fork Addict RC 15 D 19 black 1size
271201-1042222	SCO Fork Addict RC 20 D 19 black/red 1size
271202-1042222	SCO Fork Addict RC 20 19 black/red 1size
271203-1019222	SCO Fork Addict SE D 19 grey/ black 1size
271204-0014222	SCO Fork Addict 10 D 19 bronze 1size
271205-0014222	SCO Fork Addict 10 19 bronze 1size
271206-0011222	SCO Fork Addict 20 D 19 grey 1size
271207-0011222	SCO Fork Addict 20 19 grey 1size
271208-1007222	SCO Fork Addict 30 D 19 black/ white 1size
271209-1007222	SCO Fork Addict 30 19 black/ white 1size
271210-0011222	SCO Fork Speedster 10 D 19 grey 1size
271211-0011222	SCO Fork Speedster 10 19 grey 1size
271212-0001222	SCO Fork Speedster 20 D 19 black 1size
271213-0001222	SCO Fork Speedster 20 19 black 1size
271214-1040222	SCO Fork Speedster 30 19 black/yellow 1size
271215-1040222	SCO Fork Speedster 40 19 black/yellow 1size
271216-0001222	SCO Fork Speedster 50 19 black 1size
271217-0001222	SCO Fork Metrix 10 19 black 1size
271218-0001222	SCO Fork Metrix 20 19 black 1size
271219-0001222	SCO Fork Metrix 30 19 black 1size
271220-1017222	SCO Fork Addict Gravel 10 19 yellow/black 1size
271221-0006222	SCO Fork Addict Gravel 20 19 green 1size
271222-1001222	SCO Fork Addict Gravel 30 19 black/grey 1size
271223-0011222	SCO Fork Speedster Gravel 10 19 grey 1size
271224-1017222	SCO Fork Speedster Gravel 20 19 yellow/black 1size
271225-0006222	SCO Fork Speedster Gravel 30 19 green 1size
271226-1019222	SCO Fork Addict CX RC 19 grey/ black 1size
271227-1039222	SCO Fork Cont Addict RC D 19 white/grey 1size
271228-1004222	SCO Fork Cont Addict 15 D 19 black/blue 1size
271229-0001222	SCO Fork Cont Addict 35 19 black 1size
271230-1004222	SCO Fork Cont Speedster 15 19 black/blue 1size
271231-1039222	SCO Fork Cont Speedster 25 19 white/grey 1size
271232-0001222	SCO Fork Cont Speedster 35 19 black 1size
271233-1004222	SCO Fork Cont Speedster Gravel 15 19 black/blue 1size
271234-0006222	SCO Fork Cont Speedster Gravel 25 19 green 1size
271235-0003222	SCO Fork Volt-X 10 19 blue 1size
271236-0036222	SCO Fork Volt-X 20 19 orange 1size
271237-1017222	SCO Fork Gravel 24 19 yellow/ black 1size
271238-9999222	SCO Rear shock Live valve batt/ control no color 1size
271239-0006222	SCO Linkage bar Ransom alloy 19/20 green 1size
271239-0011222	SCO Linkage bar Ransom alloy 19/20 grey 1size
271239-0036222	SCO Linkage bar Ransom alloy 19/20 orange 1size
271239-0059222	SCO Linkage bar Ransom alloy 19/20 alloy 1size

271239-6167222	SCO Linkage bar Ransom alloy 19/20 dark bronze 1size
271239-6556222	SCO Linkage bar Ransom alloy 19/20 gingerbrd gd 1size
271239-6753222	SCO Linkage bar Ransom alloy 19/20 Spectrm gren 1size
271240-9999222	SCO Chainguide Ransom 19 no color 1size
271241-9999222	SCO Swingarm rep kit Ransom 19 no color 1size
271242-9999222	SCO Cableguide Trunnion blank no color 1size
271243-9999222	SCO Cableguide Trunnion Live valve no color 1size
271244-9999222	SCO Cableguide spacer Trunnion Ran 19 no color 1size
271245-9999222	SCO Cableguide set rear Ransom 19 no color 1size
271246-9999222	SCO Hub rep kit SY Merr/Cap 1.0D F no color 1size
271247-9999222	SCO Hub rep kit SY Merr/Cap 1.0D R no color 1size
271248-9999222	SCO Hub rep kit SY RR/RP2.0 Merr1.5 F 19 no color 1size
271249-9999222	SCO Hub rep kit SY RR/RP2.0 Merr1.5 R 19 no color 1size
271250-9999222	SCO Hub rep kit SY Silverton SL F19 no color 1size
271251-9999222	SCO Hub rep kit SY Silve SL Shim R 19 no color 1size
271252-9999222	SCO Hub rep kit SY Sil/Rev 1.0 CL F 19 no color 1size
271253-9999222	SCO Hub rep kit SY Sil/Rev 1.0 CL XD R19 no color 1size
271254-9999222	SCO Hub rep kit SY Revelstoke 1.5 XD R19 no color 1size
271255-9999222	SCO Hub rep kit SY Revelstoke 1.5F 19 no color 1size
271256-9999222	SCO Hub rep kit SY Silve/Reve 2.5SH R 19 no color 1size
271258-9999222	SCO Hub rep kit Form ECT-148S R 19 no color 1size
271259-9999222	SCO Hub rep kit From TXC-142A R 19 no color 1size
271260-9999222	SCO Hub rep kit Form TXC-712 F 19 no color 1size
271261-9999222	SCO Hub rep kit Form DC-19 F 19 no color 1size
271262-9999222	SCO Hub rep kit Form DHL-92 F 19 no color 1size
271263-9999222	SCO Hub rep kit Form CL2510 F 19 no color 1size
271264-9999222	SCO Hub rep kit Form CL-2641 R 19 no color 1size
271265-9999222	SCO Hub Sy/Form Boost Q/R 141x5mm no color 1size
271266-9999715	SYN Wheel Silverton SL FW 19 Wty no color 29"
271267-9999715	SYN Wheel Silverton 1.0 FW 19 Wty no color 29"
271268-9999715	SYN Wheel Revelstoke 1.0 FW 19 Wty no color 29"
271269-9999715	SYN Wheel Silverton SL RW 19 Wty no color 29"
271270-9999715	SYN Wheel Silverton 1.0 RW 19 Wty no color 29"
271271-9999715	SYN Wheel Revelstoke 1.0 RW 19 Wty no color 29"
271272-9999191	SCO Training wheels Sca/Rox/Con 19 no color 16"
271272-9999303	SCO Training wheels Sca/Rox/Con 19 no color 14
271273-9999222	SCO E-bike Swingarm rep kit all 19 no color 1size
271274-9999222	SCO E-bike H.bar Axis eRide Men/Lady 19 no color 1size
271275-9999222	SCO E-bike H.bar Axis eRide Evo 19 no color 1size
271276-9999222	SCO E-bike H.bar Silence eRide lady 19 no color 1size
271277-9999193	SCO E-bike fork Roxter 24 eRide 19 no color 24"
271278-9999714	SCO E-bike fork Suntour boost 19 no color 27.5"
271278-9999715	SCO E-bike fork Suntour boost 19 no color 29"
271279-9999193	SCO E-bike front wheel Roxter 24 19 Wty no color 24"
271280-9999222	SCO E-bike fender E-Sub Curana 19 Wty no color 1size
271282-9999714	SCO E-bike fender E-Axis 10/20 19 Wty no color 27.5"
271282-9999715	SCO E-bike fender E-Axis 10/20 19 Wty no color 29"
271283-9999222	SCO E-bike carrier E-Axis 10/20 19 Wty no color 1size
271284-9999195	SCO Rim SY Merritt 1.0 50D 24H 19 no color 700C
271285-9999195	SCO Rim SY Merritt 1.5 50 18H 19 Wty no color 700C
271286-9999195	SCO Rim SY Merritt 1.5 50 24H 19 Wty no color 700C
271287-9999195	SCO Rim SY Merritt 1.0 35D 24H 19 no color 700C
271288-9999715	SCO Rim SY Silverton 1.0 F 28H 19 no color 29"
271289-9999715	SCO Rim SY Silverton 1.0 R 28H 19 no color 29"
271290-9999715	SCO Rim SY Revelstoke 1.0 F 28H 19 no color 29"
271291-9999715	SCO Rim SY Revelstoke 1.0 R 28H 19 no color 29"
271292-9999714	SCO Rim SY Revelstoke 1.5 28H 19 Wty no color 27.5"
271292-9999715	SCO Rim SY Revelstoke 1.5 28H 19 Wty no color 29"
271293-9999714	SCO Rim SY Revelstoke 2.0 28H 19 Wty no color 27.5"
271293-9999715	SCO Rim SY Revelstoke 2.0 28H 19 Wty no color 29"
271294-9999714	SCO Rim SY Revelstoke DH 1.5 32H 19 Wty no color 27.5"
271295-9999195	SCO Rim SY/Alex race 23 24H 19 no color 700C
271296-9999195	SCO Rim SY/Alex race 23 28H 19 no color 700C
271297-9999195	SCO Rim SY/Alex race 23D 28YH 19 no color 700C

271298-9999222	SCO Stem protector JR no color 1size
271299-6267366	SCO Tire Schwalbe Energizer plus 700c skin 50mm
271300-6267331	SCO Tire Schwalbe Smart Sam 700c skin 42
271301-6267152	SCO Tire Schwalbe Citizen 700c skin 47.0
271302-9999715	SCO Rim SY Silverton 1.5 28H 19 Wty no color 29"
271303-9999715	SCO Rim SY Silverton 2.0 28H 19 Wty no color 29"
271304-9999714	SCO Rim SY Silverton 2.5 28H 19 Wty no color 27.5"
271304-9999715	SCO Rim SY Silverton 2.5 28H 19 Wty no color 29"
271350-1039222	SCO Fork Cont Addict 25 D 19 white/grey 1size
272442-9999222	SCO Rear shock Ransom Fox TR EV KSH 19 no color 1size
272443-9999222	SCO Rear shock Ransom Fox T EV 19 no color 1size
272444-9999222	SCO Rear shock Ransom X-Fusion Nude 19 no color 1size
272445-9999222	SCO Rear shock Strike eRide Fox Nude 19 no color 1size
272446-9999222	SCO Rear shock Genius Fox TR KSH 19 no color 1size
272447-9999222	SCO Rear shock Genius Fox TR 19 no color 1size
272448-9999222	SCO Rear shock Genius Fox T 19 no color 1size
272449-9999222	SCO Rideloc lever down clamp 19 no color 1size
272450-9999222	SCO Twinloc lever down clamp/ seatpost 19 no color 1size
272451-9999222	SCO Twinloc lever down clamp 19 no color 1size
272452-0036222	SCO Linkage bar Genius Carb 19 orange 1size
272452-6020222	SCO Linkage bar Genius Carb 19 anthra/green 1size
272452-6167222	SCO Linkage bar Genius Carb 19 dark bronze 1size
272452-6522222	SCO Linkage bar Genius Carb 19 fire orange 1size
272452-6754222	SCO Linkage bar Genius Carb 19 Meteor grey 1size
272453-0001222	SCO Linkage bar Genius Alloy 19 black 1size
272453-0011222	SCO Linkage bar Genius Alloy 19 grey 1size
272453-0091222	SCO Linkage bar Genius Alloy 19 dark grey 1size
272453-0288222	SCO Linkage bar Genius Alloy 19 gloss black 1size
272453-0395222	SCO Linkage bar Genius Alloy 19 ivy green 1size
272453-4712222	SCO Linkage bar Genius Alloy 19 tangeri oran 1size
272453-5167222	SCO Linkage bar Genius Alloy 19 bermuda blue 1size
272453-6167222	SCO Linkage bar Genius Alloy 19 dark bronze 1size
272453-6507222	SCO Linkage bar Genius Alloy 19 moss green 1size
272453-6546222	SCO Linkage bar Genius Alloy 19 Kelp Green 1size
272453-6556222	SCO Linkage bar Genius Alloy 19 gingerbrd gd 1size
272454-9999195	SCO Spoke rep kit SY Merr/Cap 1.0 50D no color 700C
272455-9999195	SCO Spoke Sy/Form rep kit Mer 1.5 50F 19 no color 700C
272456-9999195	SCO Spoke Sy/Form rep kit Mer 1.5 50R 19 no color 700C
272457-9999195	SCO Spoke rep kit SY Merr/Cap 1.0 35D no color 700C
272458-9999714	SCO Spoke Sy/Form rep kit Revel 2.5 19 no color 27.5"
272459-9999715	SCO Spoke Sy/Form rep kit Revel 2.0 19 no color 29"
272460-9999195	SCO Spoke Sy/Form rep kit RR2.0 R 19 no color 700C
272461-9999195	SCO Spoke Sy/Form rep kit RR2.0 F 19 no color 700C
272462-9999195	SCO Spoke Sy/Form rep kit RP2.0 R 19 no color 700C
272463-9999195	SCO Spoke Sy/Form rep kit RP2.0 F 19 no color 700C
272464-0006222	SCO E-bike Linkage strike 19/20 green 1size
272464-0011222	SCO E-bike Linkage strike 19/20 grey 1size
272464-0014222	SCO E-bike Linkage strike 19/20 bronze 1size
272464-4712222	SCO E-bike Linkage strike 19/20 tangeri oran 1size
272464-6020222	SCO E-bike Linkage strike 19/20 anthra/green 1size
272464-6546222	SCO E-bike Linkage strike 19/20 Kelp Green 1size
272464-6754222	SCO E-bike Linkage strike 19/20 Meteor grey 1size
272465-6153222	SCO E-bike batt cov inter top fix BO 19 stellar grey 1size
272465-6167222	SCO E-bike batt cov inter top fix BO 19 dark bronze 1size
272465-6350222	SCO E-bike batt cov inter top fix BO 19 injected blk 1size
272465-6351222	SCO E-bike batt cov inter top fix BO 19 ivy metal 1size
272465-6352222	SCO E-bike batt cov inter top fix BO 19 frozen white 1size
272465-6353222	SCO E-bike batt cov inter top fix BO 19 pale grey 1size
272465-6354222	SCO E-bike batt cov inter top fix BO 19 regul. white 1size
272465-6355222	SCO E-bike batt cov inter top fix BO 19 regul. black 1size
272466-0001222	SCO E-bike batt cover semi BO 19 black 1size
272467-0001222	SCO E-bike motor cover Asp/ Axis BO CX19 black 1size
272468-9999222	SCO E-bike motor cover BO Active 19 no color 1size
272469-9999222	SCO E-bike Charge port door Bosch 19 no color 1size

272470-9999222	SCO E-bike Battery plug Bosch 19 no color 1size
272471-9999715	SCO E-bike fender E-Axis 19 Wty no color 29"
272472-9999222	SCO E-bike stem plate Axis 10/ Silence 19 no color 1size
272473-9999222	SCO E-bike stem plate FL light mount no color 1size
272476-9999222	SCO E-bike fork bumper Strike 19 no color 1size
272477-9999222	SCO E-bike battery fixings strike 19 no color 1size
272478-9999222	SCO E-bike light Spanninga Axendo 19 Wty no color 1size
272479-0004715	SCO Rim DT X1675 28H 19 Wty red 29"
272479-0005715	SCO Rim DT X1675 28H 19 Wty yellow 29"
272480-9999222	SCO Fender mount rear speed/ met 19 no color 1size
272481-9999222	SCO light Spanninga Axendo DYN 19 Wty no color 1size
272482-9999222	SCO E-bike Stem Silence adj. 60mm 19 no color 1size
272540-0001914	SCO Crankset 1/2x1/8 T28 Jr14-16 19 black 89mm
273034-9999222	SCO Swingarm rep kit Genius 19 no color 1size
273035-9999222	SCO E-bike chainstay protector Strike 19 no color 1size
273036-9999222	SCO E-bike chainstay protector Aspect 19 no color 1size
273037-9999222	SCO E-bike chainguard BO Gen3 19 no color 1size
273038-9999222	SCO E-bike chainguard BO Gen2 19 no color 1size
273039-9999222	SCO E-bike Kickstand Silence17/ Sub 19 no color 1size
273040-9999714	SCO Rim SY Revelstoke 2.5 28H 19 Wty no color 27.5"
273040-9999715	SCO Rim SY Revelstoke 2.5 28H 19 Wty no color 29"
273041-9999222	SCO Fender Sub Curana 19 Wty no color 1size
273310-0011222	SCO E-bike Linkage Spark 19/20 grey 1size
273310-0288222	SCO E-bike Linkage Spark 19/20 gloss black 1size
273310-5576222	SCO E-bike Linkage Spark 19/20 matt black 1size
273310-5848222	SCO E-bike Linkage Spark 19/20 squad orange 1size
273310-6167222	SCO E-bike Linkage Spark 19/20 dark bronze 1size
273310-6754222	SCO E-bike Linkage Spark 19/20 Meteor grey 1size
273310-6755222	SCO E-bike Linkage Spark 19/20 Abyss blue 1size
273332-9999222	SCO Cable housing anti-rattle liners no color 1size
273417-9999222	SCO Dropout 135x5 DM Addict/ Foil 19 no color 1size
273561-9999222	SCO Dropout 141x5 Scale/Aspect 5-PAK no color 1size
273640-1007006	SCO Front triangle Spark RC N1NO 19 Wty black/white S
273640-1007007	SCO Front triangle Spark RC N1NO 19 Wty black/white M
273640-1007008	SCO Front triangle Spark RC N1NO 19 Wty black/white L
273640-1007009	SCO Front triangle Spark RC N1NO 19 Wty black/white XL
273641-1007222	SCO Swingarm Spark RC N1NO 19 black/white 1size
273677-0001021	SCO Frameset Foil Ultimate D 19 Wty black S52
273677-0001022	SCO Frameset Foil Ultimate D 19 Wty black M54
273677-0001023	SCO Frameset Foil Ultimate D 19 Wty black L56
273677-0001024	SCO Frameset Foil Ultimate D 19 Wty black XL58
273678-0001222	SCO Fork Foil Ultimate D 19 Wty black 1size
273679-6173192	SCO Fork Cont 20 rigid 19 Wty berry red 20"
273680-0002193	SCO Fork Cont 24 rigid 19 Wty white 24"
273681-0003193	SCO Fork Scale JR 24 rigid 19 Wty blue 24"
273682-0003192	SCO Fork Scale JR 20 rigid 19 Wty blue 20"
273683-0006193	SCO Fork Roxter 24 rigid 19 Wty green 24"
273684-3163192	SCO Fork Roxter 20 rigid 19 Wty sulphur yell 20"
273685-9999222	SCO Dropout E-sub men/lady 19 no color 1size
273686-0001222	SCO E-bike batt cov inter bottom BO 19 black 1size
273687-9999222	SCO E-bike crankset Roxter 24 155mm Wty no color 1size
273688-9999104	SCO E-bike crankset Bosch BNI 19 Wty no color 165
273688-9999897	SCO E-bike crankset Bosch BNI 19 Wty no color 172.5
274197-0001222	SCO E-bike motor cover Strike BO CX 19 black 1size
274235-9999222	SCO Axle boost QR 141x5mm (173mm) no color 1size
274236-9999222	SCO top cap assembly kit Fraser 19 no color 1size
274487-9999222	SCO Screw set Up pivots Trunnion version no color 1size
275173-9999398	SCO Rotor Ransom 930 19 Wty no color 18.0
276189-9999318	SCO Tire Kenda Slant 6 2.35 Wty no color 29
276220-9999715	SCO E-bike wheelset SY/Form MTB 19 Wty no color 29"
276836-9999896	SCO Crank RaceFace Next SL 32T Wty no color 170
276836-9999898	SCO Crank RaceFace Next SL 32T Wty no color 175
276837-9999222	SCO BB set RaceFace Next Wty no color 1size
276838-9999222	SCO Chainring RaceFace Next SL Wty no color 1size

279084-9999222	SCO E-bike Chainring spacer Bosch Gen 2

Spare parts 2020

Article number	Description
Spare parts 2020	
Article number	Description
231040-0001	SYN pump Reversible seals PACK-10 black
231041-0001	SYN pump T-head seals PACK-10 black
231043-0001	SYN Twin Head w/o hose for FP2.5 MY15 black
238620-0001222	SYN Complete AutoHead w/ hose FP2.0 2014 black 1size
238621-0001222	SYN Seal for Auto Head FP2.0 MY14 black 1size
238622-0001222	SYN Seals P/S DualHead FP3.0HV MY15 black 1size
244412-0001222	SYN Flip/Flop head MY16 1pc top cap&seal black 1size
244413-0001222	SYN Needle set box for FP2.5 MY15 black 1size
244909-0001222	SYN Compl. FlipFlop head+hose FP3.0 MY16 black 1size
250605-0001222	SYN Seal PrestaSchrader MY17 HV minipump black 1size
250606-0001222	SYN Seal Presta for MY17 HP mini pumps black 1size
263881-0001222	SYN Complete AutoHead w/ hose FP2.0 2017 black 1size
263882-0001222	SYN Seal for Auto Head FP2.0 MY17 black 1size
270245-0001222	SYN Seal Presta for Boundary HP minipump black 1size
271334-0001222	SYN Flip/Flop head MY17 alloy head core black 1size
275472-0001222	SCO Stem hardware kit Fras iC, Crest iC black 1size
275473-0001222	SCO Stem Hardware Kit Hixon iC black 1size
275474-0001222	SCO Stem Hardware Kit Hixon iC DH black 1size
275476-0001222	SYN Spindle Flat Pedals Squa-mish II 20 black 1size
275495-0001222	SYN Pump / nozzle frame brack-et black 1size
276296-1001006	SCO Front triangle Spark RC 900 SL 20 black/grey S
276296-1001007	SCO Front triangle Spark RC 900 SL 20 black/grey M
276296-1001008	SCO Front triangle Spark RC 900 SL 20 black/grey L
276296-1001009	SCO Front triangle Spark RC 900 SL 20 black/grey XL
276297-1040006	SCO Front triangle Spark RC 900 W/C 20 black/yellow S
276297-1040007	SCO Front triangle Spark RC 900 W/C 20 black/yellow M
276297-1040008	SCO Front triangle Spark RC 900 W/C 20 black/yellow L
276297-1040009	SCO Front triangle Spark RC 900 W/C 20 black/yellow XL
276298-1001006	SCO Front triangle Spark RC 900 Pro 20 black/grey S
276298-1001007	SCO Front triangle Spark RC 900 Pro 20 black/grey M
276298-1001008	SCO Front triangle Spark RC 900 Pro 20 black/grey L
276298-1001009	SCO Front triangle Spark RC 900 Pro 20 black/grey XL
276299-0001006	SCO Front triangle Spark RC 900 team 20 black S
276299-0001007	SCO Front triangle Spark RC 900 team 20 black M
276299-0001008	SCO Front triangle Spark RC 900 team 20 black L
276299-0001009	SCO Front triangle Spark RC 900 team 20 black XL
276299-1042006	SCO Front triangle Spark RC 900 team 20 black/red S
276299-1042007	SCO Front triangle Spark RC 900 team 20 black/red M
276299-1042008	SCO Front triangle Spark RC 900 team 20 black/red L
276299-1042009	SCO Front triangle Spark RC 900 team 20 black/red XL
276300-1094006	SCO Front triangle Spark RC 900 T.I 20 black/purple S
276300-1094007	SCO Front triangle Spark RC 900 T.I 20 black/purple M
276300-1094008	SCO Front triangle Spark RC 900 T.I 20 black/purple L
276300-1094009	SCO Front triangle Spark RC 900 T.I 20 black/purple XL
276301-1040006	SCO Front triangle Spark RC 900 Comp 20 black/yellow S
276301-1040007	SCO Front triangle Spark RC 900 Comp 20 black/yellow M
276301-1040008	SCO Front triangle Spark RC 900 Comp 20 black/yellow L
276301-1040009	SCO Front triangle Spark RC 900 Comp 20 black/yellow XL
276302-0001006	SCO Front triangle Spark 900 Ultimate 20 black S
276302-0001007	SCO Front triangle Spark 900 Ultimate 20 black M
276302-0001008	SCO Front triangle Spark 900 Ultimate 20 black L
276302-0001009	SCO Front triangle Spark 900 Ultimate 20 black XL
276303-1442006	SCO Front triangle Spark 900 20 green/beige S
276303-1442007	SCO Front triangle Spark 900 20 green/beige M
276303-1442008	SCO Front triangle Spark 900 20 green/beige L
276303-1442009	SCO Front triangle Spark 900 20 green/beige XL
276304-1043006	SCO Front triangle Spark 910 20 black/green S
276304-1043007	SCO Front triangle Spark 910 20 black/green M
276304-1043008	SCO Front triangle Spark 910 20 black/green L
276304-1043009	SCO Front triangle Spark 910 20 black/green XL

276305-1009006	SCO Front triangle Spark 920 20 black/orange S
276305-1009007	SCO Front triangle Spark 920 20 black/orange M
276305-1009008	SCO Front triangle Spark 920 20 black/orange L
276305-1009009	SCO Front triangle Spark 920 20 black/orange XL
276306-4244006	SCO Front triangle Spark 930 20 dark grey/re S
276306-4244007	SCO Front triangle Spark 930 20 dark grey/re M
276306-4244008	SCO Front triangle Spark 930 20 dark grey/re L
276306-4244009	SCO Front triangle Spark 930 20 dark grey/re XL
276307-1043006	SCO Front triangle Genius 900 UL 20 black/green S
276307-1043007	SCO Front triangle Genius 900 UL 20 black/green M
276307-1043008	SCO Front triangle Genius 900 UL 20 black/green L
276307-1043009	SCO Front triangle Genius 900 UL 20 black/green XL
276308-6605006	SCO Front triangle Genius 900 TND 20 gry antc/org S
276308-6605007	SCO Front triangle Genius 900 TND 20 gry antc/org M
276308-6605008	SCO Front triangle Genius 900 TND 20 gry antc/org L
276308-6605009	SCO Front triangle Genius 900 TND 20 gry antc/org XL
276309-1442006	SCO Front triangle Genius 910 20 green/beige S
276309-1442007	SCO Front triangle Genius 910 20 green/beige M
276309-1442008	SCO Front triangle Genius 910 20 green/beige L
276309-1442009	SCO Front triangle Genius 910 20 green/beige XL
276310-1004006	SCO Front triangle Genius 920 20 black/blue S
276310-1004007	SCO Front triangle Genius 920 20 black/blue M
276310-1004008	SCO Front triangle Genius 920 20 black/blue L
276310-1004009	SCO Front triangle Genius 920 20 black/blue XL
276311-1449006	SCO Front triangle Genius 930 20 black/brown S
276311-1449007	SCO Front triangle Genius 930 20 black/brown M
276311-1449008	SCO Front triangle Genius 930 20 black/brown L
276311-1449009	SCO Front triangle Genius 930 20 black/brown XL
276312-6605006	SCO Front triangle Ransom 900 TND 20 gry antc/org S
276312-6605007	SCO Front triangle Ransom 900 TND 20 gry antc/org M
276312-6605008	SCO Front triangle Ransom 900 TND 20 gry antc/org L
276312-6605009	SCO Front triangle Ransom 900 TND 20 gry antc/org XL
276313-1089006	SCO Front triangle Ransom 910 20 green/black S
276313-1089007	SCO Front triangle Ransom 910 20 green/black M
276313-1089008	SCO Front triangle Ransom 910 20 green/black L
276313-1089009	SCO Front triangle Ransom 910 20 green/black XL
276314-6605006	SCO Front triangle Gambler TND 20 gry antc/org S
276314-6605007	SCO Front triangle Gambler TND 20 gry antc/org M
276314-6605008	SCO Front triangle Gambler TND 20 gry antc/org L
276314-6605009	SCO Front triangle Gambler TND 20 gry antc/org XL
276315-0003006	SCO Front triangle Gambler 10 20 blue S
276315-0003007	SCO Front triangle Gambler 10 20 blue M
276315-0003008	SCO Front triangle Gambler 10 20 blue L
276315-0003009	SCO Front triangle Gambler 10 20 blue XL
276316-1019006	SCO Front triangle Gambler 20 20 grey/black S
276316-1019007	SCO Front triangle Gambler 20 20 grey/black M
276316-1019008	SCO Front triangle Gambler 20 20 grey/black L
276316-1019009	SCO Front triangle Gambler 20 20 grey/black XL
276317-1420006	SCO Front triangle Gambler 30 20 brown/black S
276317-1420007	SCO Front triangle Gambler 30 20 brown/black M
276317-1420008	SCO Front triangle Gambler 30 20 brown/black L
276317-1420009	SCO Front triangle Gambler 30 20 brown/black XL
276318-6608006	SCO Front triangle Cont Spark RC 900 20 pink berry S
276318-6608007	SCO Front triangle Cont Spark RC 900 20 pink berry M
276318-6608008	SCO Front triangle Cont Spark RC 900 20 pink berry L
276319-6534006	SCO Front triangle Cont Spark 910 20 pink matt S
276319-6534007	SCO Front triangle Cont Spark 910 20 pink matt M
276319-6534008	SCO Front triangle Cont Spark 910 20 pink matt L
276320-6606006	SCO Front triangle Cont Genius 910 20 green/gold S
276320-6606007	SCO Front triangle Cont Genius 910 20 green/gold M
276320-6606008	SCO Front triangle Cont Genius 910 20 green/gold L
276321-6534006	SCO Front triangle Cont Ransom 910 20 pink matt S
276321-6534007	SCO Front triangle Cont Ransom 910 20 pink matt M
276321-6534008	SCO Front triangle Cont Ransom 910 20 pink matt L

276322-1040006	SCO Front Triangle Spark Pro 700 20 black/yellow S
276323-1089006	SCO Front triangle Axis eRide Evo 20 green/black S
276323-1089007	SCO Front triangle Axis eRide Evo 20 green/black M
276323-1089008	SCO Front triangle Axis eRide Evo 20 green/black L
276323-1089009	SCO Front triangle Axis eRide Evo 20 green/black XL
276324-6605006	SCO Front triangle Genius eRide TND 20 gry antc/org S
276324-6605007	SCO Front triangle Genius eRide TND 20 gry antc/org M
276324-6605008	SCO Front triangle Genius eRide TND 20 gry antc/org L
276324-6605009	SCO Front triangle Genius eRide TND 20 gry antc/org XL
276325-6605006	SCO Front triangle Strike eRide PR 20 gry antc/org S
276325-6605007	SCO Front triangle Strike eRide PR 20 gry antc/org M
276325-6605008	SCO Front triangle Strike eRide PR 20 gry antc/org L
276325-6605009	SCO Front triangle Strike eRide PR 20 gry antc/org XL
276326-4243006	SCO Frame Spark 940 20 Wty dk grey/oran S
276326-4243007	SCO Frame Spark 940 20 Wty dk grey/oran M
276326-4243008	SCO Frame Spark 940 20 Wty dk grey/oran L
276326-4243009	SCO Frame Spark 940 20 Wty dk grey/oran XL
276327-1454006	SCO Frame Spark 960 20 Wty blue/orange S
276327-1454007	SCO Frame Spark 960 20 Wty blue/orange M
276327-1454008	SCO Frame Spark 960 20 Wty blue/orange L
276327-1454009	SCO Frame Spark 960 20 Wty blue/orange XL
276328-1040006	SCO Frame Scale RC 900 W/C 20 Wty black/yellow S
276328-1040007	SCO Frame Scale RC 900 W/C 20 Wty black/yellow M
276328-1040008	SCO Frame Scale RC 900 W/C 20 Wty black/yellow L
276328-1040009	SCO Frame Scale RC 900 W/C 20 Wty black/yellow XL
276329-2006006	SCO Frame Scale RC 900 Pro 20 Wty dk grey/blck S
276329-2006007	SCO Frame Scale RC 900 Pro 20 Wty dk grey/blck M
276329-2006008	SCO Frame Scale RC 900 Pro 20 Wty dk grey/blck L
276329-2006009	SCO Frame Scale RC 900 Pro 20 Wty dk grey/blck XL
276330-1042006	SCO Frame Scale RC 900 Team 20 Wty black/red S
276330-1042007	SCO Frame Scale RC 900 Team 20 Wty black/red M
276330-1042008	SCO Frame Scale RC 900 Team 20 Wty black/red L
276330-1042009	SCO Frame Scale RC 900 Team 20 Wty black/red XL
276331-4244006	SCO Frame Scale 910 20 Wty dark grey/re S
276331-4244007	SCO Frame Scale 910 20 Wty dark grey/re M
276331-4244008	SCO Frame Scale 910 20 Wty dark grey/re L
276331-4244009	SCO Frame Scale 910 20 Wty dark grey/re XL
276332-1105006	SCO Frame Scale 950 20 Wty blue/red S
276332-1105007	SCO Frame Scale 950 20 Wty blue/red M
276332-1105008	SCO Frame Scale 950 20 Wty blue/red L
276332-1105009	SCO Frame Scale 950 20 Wty blue/red XL
276332-1105010	SCO Frame Scale 950 20 Wty blue/red XXL
276333-1009006	SCO Frame Scale 960 20 Wty black/orange S
276333-1009007	SCO Frame Scale 960 20 Wty black/orange M
276333-1009008	SCO Frame Scale 960 20 Wty black/orange L
276333-1009009	SCO Frame Scale 960 20 Wty black/orange XL
276333-1009010	SCO Frame Scale 960 20 Wty black/orange XXL
276334-1035006	SCO Frame Ransom 920 20 Wty white/black S
276334-1035007	SCO Frame Ransom 920 20 Wty white/black M
276334-1035008	SCO Frame Ransom 920 20 Wty white/black L
276334-1035009	SCO Frame Ransom 920 20 Wty white/black XL
276334-1035010	SCO Frame Ransom 920 20 Wty white/black XXL
276335-1049005	SCO Frame Aspect 930 20 Wty grey/red XS
276335-1049006	SCO Frame Aspect 930 20 Wty grey/red S
276335-1049007	SCO Frame Aspect 930 20 Wty grey/red M
276335-1049008	SCO Frame Aspect 930 20 Wty grey/red L
276335-1049009	SCO Frame Aspect 930 20 Wty grey/red XL
276335-1049010	SCO Frame Aspect 930 20 Wty grey/red XXL
276335-1412005	SCO Frame Aspect 930 20 Wty green/yellow XS
276335-1412006	SCO Frame Aspect 930 20 Wty green/yellow S
276335-1412007	SCO Frame Aspect 930 20 Wty green/yellow M
276335-1412008	SCO Frame Aspect 930 20 Wty green/yellow L
276335-1412009	SCO Frame Aspect 930 20 Wty green/yellow XL
276335-1412010	SCO Frame Aspect 930 20 Wty green/yellow XXL

276336-0091005	SCO Frame Aspect 910 20 Wty dark grey XS
276336-0091006	SCO Frame Aspect 910 20 Wty dark grey S
276336-0091007	SCO Frame Aspect 910 20 Wty dark grey M
276336-0091008	SCO Frame Aspect 910 20 Wty dark grey L
276336-0091009	SCO Frame Aspect 910 20 Wty dark grey XL
276336-0091010	SCO Frame Aspect 910 20 Wty dark grey XXL
276337-0006005	SCO Frame Aspect 730 20 Wty green XS
276337-0006006	SCO Frame Aspect 730 20 Wty green S
276337-0006007	SCO Frame Aspect 730 20 Wty green M
276337-0006008	SCO Frame Aspect 730 20 Wty green L
276337-0011005	SCO Frame Aspect 730 20 Wty grey XS
276337-0011006	SCO Frame Aspect 730 20 Wty grey S
276337-0011007	SCO Frame Aspect 730 20 Wty grey M
276337-0011008	SCO Frame Aspect 730 20 Wty grey L
276338-1089006	SCO Frame Genius 940 20 Wty green/black S
276338-1089007	SCO Frame Genius 940 20 Wty green/black M
276338-1089008	SCO Frame Genius 940 20 Wty green/black L
276338-1089009	SCO Frame Genius 940 20 Wty green/black XL
276339-1025006	SCO Frame Cont Scale 910 20 Wty white/silver S
276339-1025007	SCO Frame Cont Scale 910 20 Wty white/silver M
276339-1025008	SCO Frame Cont Scale 910 20 Wty white/silver L
276340-0114879	SCO Frame Cont Active 10 20 Wty dark blue S7
276340-0114881	SCO Frame Cont Active 10 20 Wty dark blue M9
276340-0114882	SCO Frame Cont Active 10 20 Wty dark blue L9
276340-0114888	SCO Frame Cont Active 10 20 Wty dark blue XS7
276341-6604879	SCO Frame Cont Active 20 20 Wty ca pur/bl mt S7
276341-6604881	SCO Frame Cont Active 20 20 Wty ca pur/bl mt M9
276341-6604882	SCO Frame Cont Active 20 20 Wty ca pur/bl mt L9
276341-6604888	SCO Frame Cont Active 20 20 Wty ca pur/bl mt XS7
276345-6607006	SCO Frame Aspect eRide 910 20 Wty oran/drk gry S
276345-6607007	SCO Frame Aspect eRide 910 20 Wty oran/drk gry M
276345-6607008	SCO Frame Aspect eRide 910 20 Wty oran/drk gry L
276345-6607009	SCO Frame Aspect eRide 910 20 Wty oran/drk gry XL
276346-1412006	SCO Frame Aspect eRide 930 20 Wty green/yellow S
276346-1412007	SCO Frame Aspect eRide 930 20 Wty green/yellow M
276346-1412008	SCO Frame Aspect eRide 930 20 Wty green/yellow L
276346-1412009	SCO Frame Aspect eRide 930 20 Wty green/yellow XL
276347-1019222	SCO Frame Roxter eRide 26 20 Wty grey/black 1size
276348-1089222	SCO Frame Roxter eRide 24 20 Wty green/black 1size
276349-1017005	SCO Frame Scale 700 20 Wty yellow/black XS
276349-1017006	SCO Frame Scale 700 20 Wty yellow/black S
276350-1040005	SCO Frame Scale 26 20 Wty black/yellow XS
276351-1019222	SCO Frameset Scale RC 24 Rigid 20 wty grey/black 1size
276352-1019222	SCO Frameset Scale RC 20 Rigid 20 wty grey/black 1size
276353-0006222	SCO Frameset Scale 24 Rigid 20 Wty green 1size
276354-1043222	SCO Chainstays Genius 900 UL 20 black/green 1size
276355-6605222	SCO Chainstays Genius 900 TND 20 gry antc/org 1size
276356-1442222	SCO Chainstays Genius 910 20 green/beige 1size
276357-1004222	SCO Chainstays Genius 920 20 black/blue 1size
276358-1449222	SCO Chainstays Genius 930 20 black/brown 1size
276359-6605222	SCO Chainstays Ransom 900 TND 20 gry antc/org 1size
276360-1089222	SCO Chainstays Ransom 910 20 green/black 1size
276361-6605222	SCO Chainstays Gambler TND 20 gry antc/org 1size
276362-0003222	SCO Chainstays Gambler 10 20 blue 1size
276363-1019222	SCO Chainstays Gambler 20 20 grey/black 1size
276364-1420222	SCO Chainstays Gambler 30 20 brown/black 1size
276365-6606222	SCO Chainstays Cont Genius 910 20 green/gold 1size
276366-6534222	SCO Chainstays Cont Ransom 910 20 pink matt 1size
276367-1089222	SCO Chainstays Axis eRide Evo 20 green/black 1size
276368-6605222	SCO Chainstays Genius eRide TND 20 gry antc/org 1size
276369-6605222	SCO Chainstays Strike eRide PR 20 gry antc/org 1size
276370-1043222	SCO Seatstays Genius 900 UL 20 black/green 1size
276371-6605222	SCO Seatstays Genius 900 TND 20 gry antc/org 1size
276372-1442222	SCO Seatstays Genius 910 20 green/beige 1size

276373-1004222	SCO Seatstays Genius 920 20 black/blue 1size
276374-1449222	SCO Seatstays Genius 930 20 black/brown 1size
276375-6605222	SCO Seatstays Ransom 900 TND 20 gry antc/org 1size
276376-1089222	SCO Seatstays Ransom 910 20 green/black 1size
276377-6605222	SCO Seatstays Gambler TND 20 gry antc/org 1size
276378-0003222	SCO Seatstays Gambler 10 20 blue 1size
276379-1019222	SCO Seatstays Gambler 20 20 grey/black 1size
276380-1420222	SCO Seatstays Gambler 30 20 brown/black 1size
276381-6606222	SCO Seatstays Cont Genius 910 20 green/gold 1size
276382-6534222	SCO Seatstays Cont Ransom 910 20 pink matt 1size
276383-1089222	SCO Seatstays Axis eRide Evo 20 green/black 1size
276384-6605222	SCO Seatstays Genius eRide TND 20 gry antc/org 1size
276385-6605222	SCO Seatstays Strike eRide PR 20 gry antc/org 1size
276386-1001222	SCO Swingarm Spark RC 900 SL 20 black/grey 1size
276387-1040222	SCO Swingarm Spark RC 900 W/C 20 black/yellow 1size
276388-1001222	SCO Swingarm Spark RC 900 Pro 20 black/grey 1size
276389-0001222	SCO Swingarm Spark RC 900 team 20 black 1size
276389-1042222	SCO Swingarm Spark RC 900 team 20 black/red 1size
276390-1094222	SCO Swingarm Spark RC 900 T.I 20 black/purple 1size
276391-1040222	SCO Swingarm Spark RC 900 Comp 20 black/yellow 1size
276392-0001222	SCO Swingarm Spark 900 Ultimate 20 black 1size
276393-1442222	SCO Swingarm Spark 900 20 green/beige 1size
276394-1043222	SCO Swingarm Spark 910 20 black/green 1size
276395-1009222	SCO Swingarm Spark 920 20 black/orange 1size
276396-4244222	SCO Swingarm Spark 930 20 dark grey/re 1size
276397-6608222	SCO Swingarm Cont Spark RC 900 20 pink berry 1size
276398-6534222	SCO Swingarm Cont Spark 910 20 pink matt 1size
276399-1040222	SCO Swingarm Spark Pro 700 20 black/yellow 1size
276400-1040020	SCO Frameset Plasma 10 20 Wty black/yellow XS49
276400-1040022	SCO Frameset Plasma 10 20 Wty black/yellow M54
276400-1040885	SCO Frameset Plasma 10 20 Wty black/yellow S51
276400-1040886	SCO Frameset Plasma 10 20 Wty black/yellow L57
276400-1040887	SCO Frameset Plasma 10 20 Wty black/yellow XL60
276401-6603019	SCO Frameset Foil PR D 20 Wty pur/blck mtt XXS47
276401-6603020	SCO Frameset Foil PR D 20 Wty pur/blck mtt XS49
276401-6603021	SCO Frameset Foil PR D 20 Wty pur/blck mtt S52
276401-6603022	SCO Frameset Foil PR D 20 Wty pur/blck mtt M54
276401-6603023	SCO Frameset Foil PR D 20 Wty pur/blck mtt L56
276401-6603024	SCO Frameset Foil PR D 20 Wty pur/blck mtt XL58
276401-6603025	SCO Frameset Foil PR D 20 Wty pur/blck mtt 2XL61
276402-1442019	SCO Frameset Foil 10 D 20 Wty green/beige XXS47
276402-1442020	SCO Frameset Foil 10 D 20 Wty green/beige XS49
276402-1442021	SCO Frameset Foil 10 D 20 Wty green/beige S52
276402-1442022	SCO Frameset Foil 10 D 20 Wty green/beige M54
276402-1442023	SCO Frameset Foil 10 D 20 Wty green/beige L56
276402-1442024	SCO Frameset Foil 10 D 20 Wty green/beige XL58
276402-1442025	SCO Frameset Foil 10 D 20 Wty green/beige 2XL61
276403-1236019	SCO Frameset Speedster 10 D 20 Wty black/gold XXS47
276403-1236020	SCO Frameset Speedster 10 D 20 Wty black/gold XS49
276403-1236021	SCO Frameset Speedster 10 D 20 Wty black/gold S52
276403-1236022	SCO Frameset Speedster 10 D 20 Wty black/gold M54
276403-1236023	SCO Frameset Speedster 10 D 20 Wty black/gold L56
276403-1236024	SCO Frameset Speedster 10 D 20 Wty black/gold XL58
276403-1236025	SCO Frameset Speedster 10 D 20 Wty black/gold 2XL61
276404-1236019	SCO Frameset Speedster 10 20 Wty black/gold XXS47
276404-1236020	SCO Frameset Speedster 10 20 Wty black/gold XS49
276404-1236021	SCO Frameset Speedster 10 20 Wty black/gold S52
276404-1236022	SCO Frameset Speedster 10 20 Wty black/gold M54
276404-1236023	SCO Frameset Speedster 10 20 Wty black/gold L56
276404-1236024	SCO Frameset Speedster 10 20 Wty black/gold XL58
276404-1236025	SCO Frameset Speedster 10 20 Wty black/gold 2XL61
276405-6603020	SCO Frameset Addict Gravel 10 20 Wty pur/blck mtt XS49
276405-6603021	SCO Frameset Addict Gravel 10 20 Wty pur/blck mtt S52
276405-6603022	SCO Frameset Addict Gravel 10 20 Wty pur/blck mtt M54

276405-6603023	SCO Frameset Addict Gravel 10 20 Wty pur/blck mtt L56
276405-6603024	SCO Frameset Addict Gravel 10 20 Wty pur/blck mtt XL58
276406-2006019	SCO Frameset Speedster Gravel 10 20 Wty dk grey/blck XXS47
276406-2006020	SCO Frameset Speedster Gravel 10 20 Wty dk grey/blck XS49
276406-2006021	SCO Frameset Speedster Gravel 10 20 Wty dk grey/blck S52
276406-2006022	SCO Frameset Speedster Gravel 10 20 Wty dk grey/blck M54
276406-2006023	SCO Frameset Speedster Gravel 10 20 Wty dk grey/blck L56
276406-2006024	SCO Frameset Speedster Gravel 10 20 Wty dk grey/blck XL58
276406-2006025	SCO Frameset Speedster Gravel 10 20 Wty dk grey/blck 2XL61
276407-6606019	SCO Frameset Cont Addict 15 D 20 Wty green/gold XXS47
276407-6606020	SCO Frameset Cont Addict 15 D 20 Wty green/gold XS49
276407-6606021	SCO Frameset Cont Addict 15 D 20 Wty green/gold S52
276407-6606022	SCO Frameset Cont Addict 15 D 20 Wty green/gold M54
276407-6606023	SCO Frameset Cont Addict 15 D 20 Wty green/gold L56
276408-6604019	SCO Frameset Cont Speedster 15 20 Wty ca pur/bl mt XXS47
276408-6604020	SCO Frameset Cont Speedster 15 20 Wty ca pur/bl mt XS49
276408-6604021	SCO Frameset Cont Speedster 15 20 Wty ca pur/bl mt S52
276408-6604022	SCO Frameset Cont Speedster 15 20 Wty ca pur/bl mt M54
276408-6604023	SCO Frameset Cont Speedster 15 20 Wty ca pur/bl mt L56
276409-6604020	SCO Frameset Cont Addict Gra 15 20 Wty ca pur/bl mt XS49
276409-6604021	SCO Frameset Cont Addict Gra 15 20 Wty ca pur/bl mt S52
276409-6604022	SCO Frameset Cont Addict Gra 15 20 Wty ca pur/bl mt M54
276409-6604023	SCO Frameset Cont Addict Gra 15 20 Wty ca pur/bl mt L56
276410-6606019	SCO Frameset Cont Speedster Gra 15 20Wty green/gold XXS47
276410-6606020	SCO Frameset Cont Speedster Gra 15 20Wty green/gold XS49
276410-6606021	SCO Frameset Cont Speedster Gra 15 20Wty green/gold S52
276410-6606022	SCO Frameset Cont Speedster Gra 15 20Wty green/gold M54
276410-6606023	SCO Frameset Cont Speedster Gra 15 20Wty green/gold L56
276411-0001019	SCO Frameset Addict RC Ultimate D 20 Wty black XXS47
276411-0001020	SCO Frameset Addict RC Ultimate D 20 Wty black XS49
276411-0001021	SCO Frameset Addict RC Ultimate D 20 Wty black S52
276411-0001022	SCO Frameset Addict RC Ultimate D 20 Wty black M54
276411-0001023	SCO Frameset Addict RC Ultimate D 20 Wty black L56
276411-0001024	SCO Frameset Addict RC Ultimate D 20 Wty black XL58
276411-0001025	SCO Frameset Addict RC Ultimate D 20 Wty black 2XL61
276412-0004019	SCO Frameset Addict RC 10 D 20 Wty red XXS47
276412-0004020	SCO Frameset Addict RC 10 D 20 Wty red XS49
276412-0004021	SCO Frameset Addict RC 10 D 20 Wty red S52
276412-0004022	SCO Frameset Addict RC 10 D 20 Wty red M54
276412-0004023	SCO Frameset Addict RC 10 D 20 Wty red L56
276412-0004024	SCO Frameset Addict RC 10 D 20 Wty red XL58
276412-0004025	SCO Frameset Addict RC 10 D 20 Wty red 2XL61
276412-0011019	SCO Frameset Addict RC 10 D 20 Wty grey XXS47
276412-0011020	SCO Frameset Addict RC 10 D 20 Wty grey XS49
276412-0011021	SCO Frameset Addict RC 10 D 20 Wty grey S52
276412-0011022	SCO Frameset Addict RC 10 D 20 Wty grey M54
276412-0011023	SCO Frameset Addict RC 10 D 20 Wty grey L56
276412-0011024	SCO Frameset Addict RC 10 D 20 Wty grey XL58
276412-0011025	SCO Frameset Addict RC 10 D 20 Wty grey 2XL61
276413-1659019	SCO Frameset Addict SE D 20 Wty blck/dk grey XXS47
276413-1659020	SCO Frameset Addict SE D 20 Wty blck/dk grey XS49
276413-1659021	SCO Frameset Addict SE D 20 Wty blck/dk grey S52
276413-1659022	SCO Frameset Addict SE D 20 Wty blck/dk grey M54
276413-1659023	SCO Frameset Addict SE D 20 Wty blck/dk grey L56
276413-1659024	SCO Frameset Addict SE D 20 Wty blck/dk grey XL58
276413-1659025	SCO Frameset Addict SE D 20 Wty blck/dk grey 2XL61
276414-0011019	SCO Frameset Addict 10 20 Wty grey XXS47
276414-0011020	SCO Frameset Addict 10 20 Wty grey XS49
276414-0011021	SCO Frameset Addict 10 20 Wty grey S52
276414-0011022	SCO Frameset Addict 10 20 Wty grey M54
276414-0011023	SCO Frameset Addict 10 20 Wty grey L56
276414-0011024	SCO Frameset Addict 10 20 Wty grey XL58
276414-0011025	SCO Frameset Addict 10 20 Wty grey 2XL61
276415-1040020	SCO Fork Plasma 10 20 Wty black/yellow XS49

276415-1040022	SCO Fork Plasma 10 20 Wty black/yellow M54
276415-1040222	SCO Fork Plasma 10 20 Wty black/yellow 1size
276415-1040885	SCO Fork Plasma 10 20 Wty black/yellow S51
276415-1040886	SCO Fork Plasma 10 20 Wty black/yellow L57
276415-1040887	SCO Fork Plasma 10 20 Wty black/yellow XL60
276416-6603222	SCO Fork Foil PR D 20 Wty pur/blck mtt 1size
276417-1442222	SCO Fork Foil 10 D 20 Wty green/beige 1size
276418-0001222	SCO Fork Foil 20 D 20 Wty black 1size
276419-0001222	SCO Fork Addict RC Ultimate D 20 Wty black 1size
276420-1442222	SCO Fork Addict RC Premium D 20 Wty green/beige 1size
276421-0004222	SCO Fork Addict RC 10 D 20 Wty red 1size
276421-0011222	SCO Fork Addict RC 10 D 20 Wty grey 1size
276422-4984222	SCO Fork Addict RC Pro D 20 Wty purple/yello 1size
276423-0004222	SCO Fork Addict RC 15 D 20 Wty red 1size
276423-0011222	SCO Fork Addict RC 15 D 20 Wty grey 1size
276424-1442222	SCO Fork Addict RC 20 D 20 Wty green/beige 1size
276425-4311222	SCO Fork Addict RC 30 D 20 Wty yel/blk matt 1size
276425-6601222	SCO Fork Addict RC 30 D 20 Wty blue/beige 1size
276426-0001222	SCO Fork Addict SE D 20 Wty black 1size
276427-0011222	SCO Fork Addict 10 D 20 Wty grey 1size
276427-1442222	SCO Fork Addict 10 D 20 Wty green/beige 1size
276428-0011222	SCO Fork Addict 10 20 Wty grey 1size
276429-0012222	SCO Fork Addict 20 D 20 Wty silver 1size
276429-6601222	SCO Fork Addict 20 D 20 Wty blue/beige 1size
276430-0012222	SCO Fork Addict 20 20 Wty silver 1size
276431-0004222	SCO Fork Addict 30 D 20 Wty red 1size
276432-0004222	SCO Fork Addict 30 20 Wty red 1size
276433-1236222	SCO Fork Speedster 10 D 20 Wty black/gold 1size
276434-1236222	SCO Fork Speedster 10 20 Wty black/gold 1size
276435-6601222	SCO Fork Speedster 20 D 20 Wty blue/beige 1size
276436-6601222	SCO Fork Speedster 20 20 Wty blue/beige 1size
276437-1018222	SCO Fork Speedster 30 20 Wty red/black 1size
276438-1001222	SCO Fork Speedster 40 20 Wty black/grey 1size
276439-2006222	SCO Fork Speedster 50 20 Wty dk grey/blck 1size
276440-6602222	SCO Fork Metrix 10 20 Wty brow/drk blu 1size
276441-1089222	SCO Fork Metrix 20 20 Wty green/black 1size
276442-0011222	SCO Fork Metrix 30 EQ 20 Wty grey 1size
276443-6603222	SCO Fork Addict Gravel 10 20 Wty pur/blck mtt 1size
276444-6602222	SCO Fork Addict Gravel 20 20 Wty brow/drk blu 1size
276445-1089222	SCO Fork Addict Gravel 30 20 Wty green/black 1size
276446-2006222	SCO Fork Speedster Gravel 10 20 Wty dk grey/blck 1size
276447-1437222	SCO Fork Speedster Gravel 20 20 Wty brown/blue 1size
276448-0006222	SCO Fork Speedster Gravel 30 20 Wty green 1size
276449-4984222	SCO Fork Addict CX RC 20 Wty purple/yello 1size
276450-6606222	SCO Fork Cont Addict 15 D 20 Wty green/gold 1size
276451-6603222	SCO Fork Cont Addict 25 D 20 Wty pur/blck mtt 1size
276452-6534222	SCO Fork Cont Addict 35 D 20 Wty pink matt 1size
276453-6604222	SCO Fork Cont Speedster 15 20 Wty ca pur/bl mt 1size
276454-6534222	SCO Fork Cont Speedster 25 20 Wty pink matt 1size
276455-0003222	SCO Fork Cont Speedster 35 20 Wty blue 1size
276456-6604222	SCO Fork Cont Addict Gravel 15 20 Wty ca pur/bl mt 1size
276457-6606222	SCO Fork Cont Speedster Gravel 15 20 Wty green/gold 1size
276458-6534222	SCO Fork Cont Speedster Gravel 25 20 Wty pink matt 1size
276459-1019222	SCO Fork Scale RC 24 rigid 20 wty grey/black 1size
276460-1019222	SCO Fork Scale RC 20 rigid 20 wty grey/black 1size
276461-0003222	SCO Fork Cont 24 rigid 20 Wty blue 1size
276462-0006222	SCO Fork Scale 20 rigid 20 Wty green 1size
276463-0003222	SCO Fork Cont 20 rigid 20 Wty blue 1size
276464-0006222	SCO Fork Scale 24 rigid 20 Wty green 1size
276465-0011222	SCO Fork Speedster Gravel 24 20 Wty grey 1size
276466-0004222	SCO Fork Speedster Gravel 24 FB 20 Wty red 1size
276467-0005222	SCO Fork Roxter 24 20 Wty yellow 1size
276468-1008222	SCO Fork Roxter 20 20 Wty orange/black 1size
276469-9999222	SCO Shock mount bolt kit Gambler 20 no color 1size

276470-9999222	SCO Shock mount bush set Fox Gambler 20 no color 1size
276471-0003222	SCO Linkage bar Gambler alloy 20 blue 1size
276471-0012222	SCO Linkage bar Gambler alloy 20 silver 1size
276471-0013222	SCO Linkage bar Gambler alloy 20 gold 1size
276472-0036222	SCO Linkage bar Gambler Carbon 20 orange 1size
276477-9999222	SCO Bashguard mounting rubber Gambler 20 no color 1size
276478-9999222	SCO Swingarm rep kit Gambler 20 no color 1size
276479-9999222	SCO Screwset Gambler 20 no color 1size
276480-9999222	SCO Cableguide kit Gambler 20 no color 1size
276481-9999222	SCO Axle rear Gambler 20 no color 1size
276482-9999222	SCO Dropout and Geo chip Gambler 20 no color 1size
276483-9999937	SCO brake mount rear Gambler 20 no color 200mm
276484-9999222	SCO E-bike CS prote Gen/Strike/Axis-E 20 no color 1size
276497-0009317	SCO Tire Schwalbe Lugano 2 700c Wty beige 28
276497-0009321	SCO Tire Schwalbe Lugano 2 700c Wty beige 32
276498-0009317	SCO Tire Schwalbe ONE 700c Wty beige 28
276498-0009319	SCO Tire Schwalbe ONE 700c Wty beige 30
276498-0011317	SCO Tire Schwalbe ONE 700c Wty grey 28
276498-0011319	SCO Tire Schwalbe ONE 700c Wty grey 30
276499-0009314	SCO Tire Schwalbe Pro ONE 700c Wty beige 25
276499-0009317	SCO Tire Schwalbe Pro ONE 700c Wty beige 28
276499-0011314	SCO Tire Schwalbe Pro ONE 700c Wty grey 25
276499-0011317	SCO Tire Schwalbe Pro ONE 700c Wty grey 28
276568-1034006	SCO Front triangle Genius eRide 10 20Wty blue/black S
276568-1034007	SCO Front triangle Genius eRide 10 20Wty blue/black M
276568-1034008	SCO Front triangle Genius eRide 10 20Wty blue/black L
276568-1034009	SCO Front triangle Genius eRide 10 20Wty blue/black XL
276569-1089006	SCO Front triangle Genius eRide 20 20Wty green/black S
276569-1089007	SCO Front triangle Genius eRide 20 20Wty green/black M
276569-1089008	SCO Front triangle Genius eRide 20 20Wty green/black L
276569-1089009	SCO Front triangle Genius eRide 20 20Wty green/black XL
276570-1454006	SCO Front triangle Genius eRide 30 20Wty blue/orange S
276570-1454007	SCO Front triangle Genius eRide 30 20Wty blue/orange M
276570-1454008	SCO Front triangle Genius eRide 30 20Wty blue/orange L
276570-1454009	SCO Front triangle Genius eRide 30 20Wty blue/orange XL
276571-1001006	SCO Front triangle Spark eRide 10 20 Wty black/grey S
276571-1001007	SCO Front triangle Spark eRide 10 20 Wty black/grey M
276571-1001008	SCO Front triangle Spark eRide 10 20 Wty black/grey L
276571-1001009	SCO Front triangle Spark eRide 10 20 Wty black/grey XL
276572-1454006	SCO Front triangle Spark eRide 20 20 Wty blue/orange S
276572-1454007	SCO Front triangle Spark eRide 20 20 Wty blue/orange M
276572-1454008	SCO Front triangle Spark eRide 20 20 Wty blue/orange L
276572-1454009	SCO Front triangle Spark eRide 20 20 Wty blue/orange XL
276573-1442006	SCO Front triangle Strike eRide 10 20Wty green/beige S
276573-1442007	SCO Front triangle Strike eRide 10 20Wty green/beige M
276573-1442008	SCO Front triangle Strike eRide 10 20Wty green/beige L
276573-1442009	SCO Front triangle Strike eRide 10 20Wty green/beige XL
276574-0036006	SCO Front triangle Strike eRide 20 20Wty orange S
276574-0036007	SCO Front triangle Strike eRide 20 20Wty orange M
276574-0036008	SCO Front triangle Strike eRide 20 20Wty orange L
276574-0036009	SCO Front triangle Strike eRide 20 20Wty orange XL
276575-1019006	SCO Front triangle Strike eRide 30 20Wty grey/black S
276575-1019007	SCO Front triangle Strike eRide 30 20Wty grey/black M
276575-1019008	SCO Front triangle Strike eRide 30 20Wty grey/black L
276575-1019009	SCO Front triangle Strike eRide 30 20Wty grey/black XL
276576-0036006	SCO Front triangle Strike eRide 40 20Wty orange S
276576-0036007	SCO Front triangle Strike eRide 40 20Wty orange M
276576-0036008	SCO Front triangle Strike eRide 40 20Wty orange L
276576-0036009	SCO Front triangle Strike eRide 40 20Wty orange XL
276576-1412006	SCO Front triangle Strike eRide 40 20Wty green/yellow S
276576-1412007	SCO Front triangle Strike eRide 40 20Wty green/yellow M
276576-1412008	SCO Front triangle Strike eRide 40 20Wty green/yellow L
276576-1412009	SCO Front triangle Strike eRide 40 20Wty green/yellow XL
276577-1034222	SCO Chainstays Genius eRide 10 20 Wty blue/black 1size

276578-1089222	SCO Chainstays Genius eRide 20 20 Wty green/black 1size
276579-1454222	SCO Chainstays Genius eRide 30 20 Wty blue/orange 1size
276580-1001222	SCO Chainstays Spark eRide 10 20 Wty black/grey 1size
276581-1454222	SCO Chainstays Spark eRide 20 20 Wty blue/orange 1size
276582-1442222	SCO Chainstays Strike eRide 10 20 Wty green/beige 1size
276583-0036222	SCO Chainstays Strike eRide 20 20 Wty orange 1size
276584-1019222	SCO Chainstays Strike eRide 30 20 Wty grey/black 1size
276585-0036222	SCO Chainstays Strike eRide 40 20 Wty orange 1size
276585-1412222	SCO Chainstays Strike eRide 40 20 Wty green/yellow 1size
276586-1034222	SCO Seatstays Genius eRide 10 20 Wty blue/black 1size
276587-1089222	SCO Seatstays Genius eRide 20 20 Wty green/black 1size
276588-1454222	SCO Seatstays Genius eRide 30 20 Wty blue/orange 1size
276589-1001222	SCO Seatstays Spark eRide 10 20 Wty black/grey 1size
276590-1454222	SCO Seatstays Spark eRide 20 20 Wty blue/orange 1size
276591-1442222	SCO Seatstays Strike eRide 10 20 Wty green/beige 1size
276592-0036222	SCO Seatstays Strike eRide 20 20 Wty orange 1size
276593-1019222	SCO Seatstays Strike eRide 30 20 Wty grey/black 1size
276594-0036222	SCO Seatstays Strike eRide 40 20 Wty orange 1size
276594-1412222	SCO Seatstays Strike eRide 40 20 Wty green/yellow 1size
276992-0012222	SCO Frame Voltage YZ 0.1 20 Wty silver 1size
276993-0006222	SCO Frameset Volt-X 10 20 Wty green 1size
276996-0025022	SCO Frameset Plasma 5 20 Wty purple M54
276996-0025885	SCO Frameset Plasma 5 20 Wty purple S51
276996-0025886	SCO Frameset Plasma 5 20 Wty purple L57
276996-0025887	SCO Frameset Plasma 5 20 Wty purple XL60
276997-0006019	SCO Frameset Addict RC PRE D 20 Wty green XXS47
276997-0006020	SCO Frameset Addict RC PRE D 20 Wty green XS49
276997-0006021	SCO Frameset Addict RC PRE D 20 Wty green S52
276997-0006022	SCO Frameset Addict RC PRE D 20 Wty green M54
276997-0006023	SCO Frameset Addict RC PRE D 20 Wty green L56
276997-0006024	SCO Frameset Addict RC PRE D 20 Wty green XL58
276997-0006025	SCO Frameset Addict RC PRE D 20 Wty green 2XL61

276998-1089006	SCO Frame Axis eRide 10 men 20 Wty green/black S
276998-1089007	SCO Frame Axis eRide 10 men 20 Wty green/black M
276998-1089008	SCO Frame Axis eRide 10 men 20 Wty green/black L
276998-1089009	SCO Frame Axis eRide 10 men 20 Wty green/black XL
276999-1089006	SCO Frame Axis eRide 30 men 20 Wty green/black S
276999-1089007	SCO Frame Axis eRide 30 men 20 Wty green/black M
276999-1089008	SCO Frame Axis eRide 30 men 20 Wty green/black L
276999-1089009	SCO Frame Axis eRide 30 men 20 Wty green/black XL
277000-1019006	SCO Frame Silence eRide 10 men 20 Wty grey/black S
277000-1019007	SCO Frame Silence eRide 10 men 20 Wty grey/black M
277000-1019008	SCO Frame Silence eRide 10 men 20 Wty grey/black L
277000-1019009	SCO Frame Silence eRide 10 men 20 Wty grey/black XL
277001-0003006	SCO Frame Silence eRide 10 lady 20 Wty blue S
277001-0003007	SCO Frame Silence eRide 10 lady 20 Wty blue M
277001-0003008	SCO Frame Silence eRide 10 lady 20 Wty blue L
277002-1018005	SCO Frame Sub Active eRide 10 rack 20Wty red/black XS
277002-1018006	SCO Frame Sub Active eRide 10 rack 20Wty red/black S
277002-1018007	SCO Frame Sub Active eRide 10 rack 20Wty red/black M
277002-1018008	SCO Frame Sub Active eRide 10 rack 20Wty red/black L
277003-0380005	SCO Frame Sub Tour eRide 10 USX 20 Wty blue/gold XS
277003-0380006	SCO Frame Sub Tour eRide 10 USX 20 Wty blue/gold S
277003-0380007	SCO Frame Sub Tour eRide 10 USX 20 Wty blue/gold M
277003-0380008	SCO Frame Sub Tour eRide 10 USX 20 Wty blue/gold L
277004-1019006	SCO Frame Sub Sport eRide 10 lady 20 Wty grey/black S
277004-1019007	SCO Frame Sub Sport eRide 10 lady 20 Wty grey/black M
277004-1019008	SCO Frame Sub Sport eRide 10 lady 20 Wty grey/black L
277005-0380006	SCO Frame Sub Tour eRide 10 lady 20 Wty blue/gold S
277005-0380007	SCO Frame Sub Tour eRide 10 lady 20 Wty blue/gold M
277005-0380008	SCO Frame Sub Tour eRide 10 lady 20 Wty blue/gold L
277006-1019006	SCO Frame Sub Sport eRide 10 men 20 Wty grey/black S
277006-1019007	SCO Frame Sub Sport eRide 10 men 20 Wty grey/black M
277006-1019008	SCO Frame Sub Sport eRide 10 men 20 Wty grey/black L

277006-1019009	SCO Frame Sub Sport eRide 10 men 20 Wty grey/black XL
277007-0380006	SCO Frame Sub Tour eRide 10 men 20 Wty blue/gold S
277007-0380007	SCO Frame Sub Tour eRide 10 men 20 Wty blue/gold M
277007-0380008	SCO Frame Sub Tour eRide 10 men 20 Wty blue/gold L
277007-0380009	SCO Frame Sub Tour eRide 10 men 20 Wty blue/gold XL
277010-2506006	SCO Frame Sub Sport 10 men 20 Wty green matt S
277010-2506007	SCO Frame Sub Sport 10 men 20 Wty green matt M
277010-2506008	SCO Frame Sub Sport 10 men 20 Wty green matt L
277010-2506009	SCO Frame Sub Sport 10 men 20 Wty green matt XL
277011-0013006	SCO Frame Sub Sport 10 lady 20 Wty gold S
277011-0013007	SCO Frame Sub Sport 10 lady 20 Wty gold M
277011-0013008	SCO Frame Sub Sport 10 lady 20 Wty gold L
277012-0328006	SCO Frame Sub Comfort 20 men 20 Wty blue matt S
277012-0328007	SCO Frame Sub Comfort 20 men 20 Wty blue matt M
277012-0328008	SCO Frame Sub Comfort 20 men 20 Wty blue matt L
277012-0328009	SCO Frame Sub Comfort 20 men 20 Wty blue matt XL
277013-6604006	SCO Frame Sub Comfort 10 USX 20 Wty ca pur/bl mt S
277013-6604007	SCO Frame Sub Comfort 10 USX 20 Wty ca pur/bl mt M
277013-6604008	SCO Frame Sub Comfort 10 USX 20 Wty ca pur/bl mt L
277014-0328006	SCO Frame Sub Sport 40 lady 20 Wty blue matt S
277014-0328007	SCO Frame Sub Sport 40 lady 20 Wty blue matt M
277014-0328008	SCO Frame Sub Sport 40 lady 20 Wty blue matt L
277015-0328006	SCO Frame Sub Cross 10 men 20 Wty blue matt S
277015-0328007	SCO Frame Sub Cross 10 men 20 Wty blue matt M
277015-0328008	SCO Frame Sub Cross 10 men 20 Wty blue matt L
277015-0328009	SCO Frame Sub Cross 10 men 20 Wty blue matt XL
277016-0013006	SCO Frame Sub Cross 10 lady 20 Wty gold S
277016-0013007	SCO Frame Sub Cross 10 lady 20 Wty gold M
277016-0013008	SCO Frame Sub Cross 10 lady 20 Wty gold L
277019-0025022	SCO Fork Plasma 5 20 Wty purple M54
277019-0025885	SCO Fork Plasma 5 20 Wty purple S51
277019-0025886	SCO Fork Plasma 5 20 Wty purple L57
277019-0025887	SCO Fork Plasma 5 20 Wty purple XL60
277020-0006222	SCO Fork Volt-X 10 20 Wty green 1size
277021-1009222	SCO Fork Volt-X 20 20 Wty black/orange 1size
277022-0036222	SCO Fork Silence eRide Evo 20 Wty oramge 1size
277023-9999222	SCO Rear shock Gambler X-Fusion 20 Wty no color 1size
277024-9999222	SCO Shock mount bush set X/F Gambler 20 no color 1size
277025-9999222	SCO Cableguide kit Addict RC D 20 no color 1size
277026-9999806	SCO Cable anti-rattle liner 90cm 20 no color 90 cm
277027-0001222	SCO Brake mount cover front Addict RC 20 black 1size
277027-0003222	SCO Brake mount cover front Addict RC 20 blue 1size
277027-0004222	SCO Brake mount cover front Addict RC 20 red 1size
277027-0005222	SCO Brake mount cover front Addict RC 20 yellow 1size
277027-0006222	SCO Brake mount cover front Addict RC 20 green 1size
277027-0011222	SCO Brake mount cover front Addict RC 20 grey 1size
277027-0025222	SCO Brake mount cover front Addict RC 20 purple 1size
277027-6756222	SCO Brake mount cover front Addict RC 20 candy blue 1size
277028-9999222	SCO Axle front Addict RC/Plasma 6 TP 20 no color 1size
277029-9999222	SCO Axle rear Addict RC/Plasma 6 TP 20 no color 1size
277030-9999222	SCO Axle rear Addict RC/Plasma 6 20 no color 1size
277031-9999222	SCO Axle front Addict RC/Plasma 6 20 no color 1size
277032-9999222	SCO Axle RWS rear 148x12 boost plug T30 no color 1size
277033-9999222	SCO Axle RWS rear 148x12 boost plug T25 no color 1size
277036-9999222	SCO Hub rep kit Form CL-2241 Shim R 20 no color 1size
277041-0003222	SCO eRIDE Linkage Genius 20 blue 1size
277041-0006222	SCO eRIDE Linkage Genius 20 green 1size
277041-0036222	SCO eRIDE Linkage Genius 20 orange 1size
277041-5167222	SCO eRIDE Linkage Genius 20 bermuda blue 1size
277042-0001367	SCO Stem top cover SY RR iC black 100mm
277042-0001368	SCO Stem top cover SY RR iC black 90mm
277042-0001372	SCO Stem top cover SY RR iC black 120mm
277042-0001379	SCO Stem top cover SY RR iC black 110mm
277042-0001394	SCO Stem top cover SY RR iC black 130mm

277042-0001395	SCO Stem top cover SY RR iC black 140mm
277043-9999222	SCO tire Kenda Booster 20x2.4 Wty no color 1size
277044-9999222	SCO tire Kenda Booster 24x2.4 Wty no color 1size
277045-9999222	SCO tire Kenda Booster 26x2.4 Wty no color 1size
277046-9999222	SCO tire Kenda Booster 27.5x2.4 Wty no color 1size
277047-9999222	SCO tire Kenda Booster 29x2.2 Wty no color 1size
277048-9999222	SCO tire Kenda Booster 29x2.4 Wty no color 1size
277049-9999222	SCO tire Kenda Booster 29x2.6 Wty no color 1size
277050-9999222	SCO tire Kenda Booster 700x45c Wty no color 1size
277538-0135714	SCO Fork Zoom 565 V-brake Wty black matt 27.5"
277538-0135715	SCO Fork Zoom 565 V-brake Wty black matt 29"
277541-0036006	SCO Frame Silence eRide Evo 20 Wty orange S
277541-0036007	SCO Frame Silence eRide Evo 20 Wty orange M
277541-0036008	SCO Frame Silence eRide Evo 20 Wty orange L
277541-0036009	SCO Frame Silence eRide Evo 20 Wty orange XL
277542-0006019	SCO Frameset Metrix 20 20 Wty green XXS47
277542-0006020	SCO Frameset Metrix 20 20 Wty green XS49
277542-0006021	SCO Frameset Metrix 20 20 Wty green S52
277542-0006022	SCO Frameset Metrix 20 20 Wty green M54
277542-0006023	SCO Frameset Metrix 20 20 Wty green L56
277542-0006024	SCO Frameset Metrix 20 20 Wty green XL58
277542-0006025	SCO Frameset Metrix 20 20 Wty green 2XL61
277543-9999222	SCO Seatclamp Addict RC 20 no color 1size
277544-9999222	SCO Dropout Addict RC 20 no color 1size
277545-9999222	SCO Dropout Addict RC direct mount 20 no color 1size
277546-0001940	SCO Stem spacer kit SY Hixon iC DH black 5mm
277546-0001941	SCO Stem spacer kit SY Hixon iC DH black 10mm
277547-0001222	SCO Stem spacer kit SY Crest iC black 1size
277548-0001222	SCO Stem spacer kit SY RR iC black 1size
277549-0001222	SCO Stem steerer cap SY RR iC black 1size
277550-0001222	SCO Stem steerer cap SY Crest iC black 1size
278319-0012006	SCO Front triangle Spark N1NO 20 Wty silver S
278319-0012007	SCO Front triangle Spark N1NO 20 Wty silver M
278319-0012008	SCO Front triangle Spark N1NO 20 Wty silver L
278319-0012009	SCO Front triangle Spark N1NO 20 Wty silver XL
278320-0004006	SCO Front triangle Spark N1NO LTD 20 Wty red S
278320-0004007	SCO Front triangle Spark N1NO LTD 20 Wty red M
278320-0004008	SCO Front triangle Spark N1NO LTD 20 Wty red L
278320-0004009	SCO Front triangle Spark N1NO LTD 20 Wty red XL
278321-0012006	SCO Front triangle Genius LTD 20 Wty silver S
278321-0012007	SCO Front triangle Genius LTD 20 Wty silver M
278321-0012008	SCO Front triangle Genius LTD 20 Wty silver L
278321-0012009	SCO Front triangle Genius LTD 20 Wty silver XL
278322-1007006	SCO Front triangle Ransom LTD 20 Wty black/white S
278322-1007007	SCO Front triangle Ransom LTD 20 Wty black/white M
278322-1007008	SCO Front triangle Ransom LTD 20 Wty black/white L
278322-1007009	SCO Front triangle Ransom LTD 20 Wty black/white XL
278323-1607006	SCO Frame Scale 920 20 Wty silvr/yellow S
278323-1607007	SCO Frame Scale 920 20 Wty silvr/yellow M
278323-1607008	SCO Frame Scale 920 20 Wty silvr/yellow L
278323-1607009	SCO Frame Scale 920 20 Wty silvr/yellow XL
278324-0001005	SCO Frame Aspect 780 V-Brake 20 Wty black XS
278324-0001006	SCO Frame Aspect 780 V-Brake 20 Wty black S
278324-0001007	SCO Frame Aspect 780 V-Brake 20 Wty black M
278324-0001008	SCO Frame Aspect 780 V-Brake 20 Wty black L
278325-0001005	SCO Frame Aspect 980 V-Brake 20 Wty black XS
278325-0001006	SCO Frame Aspect 980 V-Brake 20 Wty black S
278325-0001007	SCO Frame Aspect 980 V-Brake 20 Wty black M
278325-0001008	SCO Frame Aspect 980 V-Brake 20 Wty black L
278325-0001009	SCO Frame Aspect 980 V-Brake 20 Wty black XL
278325-0001010	SCO Frame Aspect 980 V-Brake 20 Wty black XXL
278326-0001006	SCO Frame Genius 950 20 Wty black S
278326-0001007	SCO Frame Genius 950 20 Wty black M
278326-0001008	SCO Frame Genius 950 20 Wty black L

278326-0001009	SCO Frame Genius 950 20 Wty black XL
278327-1018222	SCO Frame Scale 24 20 Wty red/black 1size
278328-1009222	SCO Frame Scale 20 20 Wty black/orange 1size
278329-0006222	SCO Frame Contessa 24 20 Wty green 1size
278330-0011005	SCO Frame Spark 700 20 Wty grey XS
278330-0011006	SCO Frame Spark 700 20 Wty grey S
278331-0006222	SCO Frameset Roxter 24 20 Wty green 1size
278332-0012222	SCO Chainstays Genius LTD 20 Wty silver 1size
278333-1007222	SCO Chainstays Ransom LTD 20 Wty black/white 1size
278334-0012222	SCO Seatstays Genius LTD 20 Wty silver 1size
278335-1007222	SCO Seatstays Ransom LTD 20 Wty black/white 1size
278336-0012222	SCO Swingarm Spark N1NO 20 Wty silver 1size
278337-0004222	SCO Swingarm Spark N1NO LTD 20 Wty red 1size
278338-0004019	SCO Frameset Speedster 30 20 Wty red XXS47
278338-0004020	SCO Frameset Speedster 30 20 Wty red XS49
278338-0004021	SCO Frameset Speedster 30 20 Wty red S52
278338-0004022	SCO Frameset Speedster 30 20 Wty red M54
278338-0004023	SCO Frameset Speedster 30 20 Wty red L56
278338-0004024	SCO Frameset Speedster 30 20 Wty red XL58
278338-0004025	SCO Frameset Speedster 30 20 Wty red 2XL61
278339-0012019	SCO Frameset Metrix 30 20 Wty silver XXS47
278339-0012020	SCO Frameset Metrix 30 20 Wty silver XS49
278339-0012021	SCO Frameset Metrix 30 20 Wty silver S52
278339-0012022	SCO Frameset Metrix 30 20 Wty silver M54
278339-0012023	SCO Frameset Metrix 30 20 Wty silver L56
278339-0012024	SCO Frameset Metrix 30 20 Wty silver XL58
278339-0012025	SCO Frameset Metrix 30 20 Wty silver 2XL61
278340-0006006	SCO Frameset Sub Cross 50 men 20 Wty green S
278340-0006007	SCO Frameset Sub Cross 50 men 20 Wty green M
278340-0006008	SCO Frameset Sub Cross 50 men 20 Wty green L
278340-0006009	SCO Frameset Sub Cross 50 men 20 Wty green XL
278340-0006010	SCO Frameset Sub Cross 50 men 20 Wty green XXL
278341-0002006	SCO Frameset Sub Cross 50 lady 20 Wty white S
278341-0002007	SCO Frameset Sub Cross 50 lady 20 Wty white M
278341-0002008	SCO Frameset Sub Cross 50 lady 20 Wty white L
278341-0002009	SCO Frameset Sub Cross 50 lady 20 Wty white XL
278342-0001006	SCO Frame Silence eRide 20 men 20 Wty black S
278342-0001007	SCO Frame Silence eRide 20 men 20 Wty black M
278342-0001008	SCO Frame Silence eRide 20 men 20 Wty black L
278342-0001009	SCO Frame Silence eRide 20 men 20 Wty black XL
278343-0001006	SCO Frame Silence eRide 20 lady 20 Wty black S
278343-0001007	SCO Frame Silence eRide 20 lady 20 Wty black M
278343-0001008	SCO Frame Silence eRide 20 lady 20 Wty black L
278344-6756222	SCO Fork Addict RC ULT T.I D 20 Wty candy blue 1size
278345-0006222	SCO Fork Sub Cross 50 men 20 Wty green 1size
278346-0002222	SCO Fork Sub Cross 50 lady 20 Wty white 1size
278347-9999222	SCO Rear shock Spark 100mm RS RLC3 Wty no color 1size
278348-9999222	SCO Shock mount bush set R/S Spark 20 no color 1size
278349-6522222	SCO Linkage bar Ransom Carbon 20 fire orange 1size
278349-6758222	SCO Linkage bar Ransom Carbon 20 shrk gry/whi 1size
278350-9999222	SCO Cableguide BB Aspect 30/80 20 no color 1size
278351-0004222	SCO Brake N1NO Sram level ULT 20 Wty red 1size
278352-9999222	SCO Chainguard Sub SKS C-Blade 20 Wty no color 1size
278353-9999222	SCO Hub rep kit Form SCT-2010 XD R 20 no color 1size
278354-9999222	SCO Hub rep kit Form SCT-2012 M/S R 20 no color 1size
278355-9999222	SCO Hub rep kit SY Silve 2.5 M/S 6B R 20 no color 1size
278356-9999222	SCO Hub rep kit SY Silve 1.5 M/S CL R 20 no color 1size
278357-9999222	SCO Hub rep kit SY Silve 1.5 M/S 6B R 20 no color 1size
278358-9999222	SCO eRIDE Bat mount up Gen/Str/Ax-E 20 no color 1size
278359-9999222	SCO eRIDE Range booster plugs Gen/Asp 20 no color 1size
278360-9999222	SCO eRIDE Bat mount Silence 20 no color 1size
278361-9999222	SCO eRIDE Bat mount Asp/Ax/Sub 20 no color 1size
278362-9999222	SCO eRIDE Dropout set Silence belt 20 no color 1size
278363-9999222	SCO eRIDE Dropout set Silence gear 20 no color 1size

278364-9999222	SCO eRIDE D/T fork bump Gen/Str/Axis-E20 no color 1size
278365-9999222	SCO eRIDE Cableguide set Gen/Str/Ax-E 20 no color 1size
278366-9999222	SCO eRIDE Cableguide set Silence 20 no color 1size
278367-9999222	SCO eRIDE Cableguide set Genius CB 20 no color 1size
278368-0001222	SCO eRIDE Bat cover Gen/Str/Ax-E 20 black 1size
278369-0001222	SCO eRIDE Bat cover Asp/Ax/Sub 20 black 1size
278370-0012222	SCO eRIDE Bat cover Silence 20 silver 1size
278370-4712222	SCO eRIDE Bat cover Silence 20 tangeri oran 1size
278370-5800222	SCO eRIDE Bat cover Silence 20 petrol blue 1size
278370-6757222	SCO eRIDE Bat cover Silence 20 sparkle blac 1size
278371-0001222	SCO eRIDE Motor cov Gen/Str/Ax-E 20 black 1size
278372-0001222	SCO eRIDE Motor cov Silence 20 black 1size
278373-0001222	SCO eRIDE Motor cov Asp/Ax/Sub Gen3 20 black 1size
278374-0001222	SCO eRIDE Motor cov Asp/Ax/Sub Gen4 20 black 1size
278375-0001222	SCO eRIDE Charge port BO 20 black 1size
278376-0001222	SCO eRIDE Chainguard Silence 20 black 1size
278377-9999192	SCO eRIDE Rim Roxter 20 Wty no color 20"
278377-9999193	SCO eRIDE Rim Roxter 20 Wty no color 24"
278378-9999715	SCO eRIDE Rim Axis 20 Wty no color 29"
278379-9999716	SCO eRIDE Rim Silence 20 Wty no color 700C
278380-9999222	SCO E-bike Light Sub Lezyne E70 20 Wty no color 1size
278381-9999222	SCO E-bike Light Silence 10/20 20 Wty no color 1size
278382-0001222	SCO eRIDE Fender Axis 10/20/30 20 Wty black 1size
278383-0001222	SCO eRIDE Fender Slience 10/20 20 Wty black 1size
278384-0001222	SCO eRIDE Fender Silence Evo 20 Wty black 1size
278385-9999222	SCO eRIDE Chainguard sub active USX 20 no color 1size
278386-9999222	SCO eRIDE Kickstand Sub 20 Wty no color 1size
278387-0001222	SCO E-bike Seat clamp Silence 20 Wty black 1size
278388-9999222	SCO eRIDE Rack Silence 20 Wty no color 1size
278389-9999104	SCO eRIDE crank arms FSA745 Gen4 20 Wty no color 165
278389-9999896	SCO eRIDE crank arms FSA745 Gen4 20 Wty no color 170
278389-9999898	SCO eRIDE crank arms FSA745 Gen4 20 Wty no color 175
278390-9999716	SCO Rim SY Capital 1.0 X40D 24H 20 no color 700C
278391-9999716	SCO Rim SY Capital 1.0 35D 24H 20 no color 700C
278392-9999716	SCO Rim SY Capital 1.0 50D 24H 20 no color 700C
278393-9999715	SCO Rim SY Revelstoke 1.5 DH 20 no color 29"
278394-0004368	SCO Bar N1NO Fraiser IC 20 Wty red 90mm
278394-0004375	SCO Bar N1NO Fraiser IC 20 Wty red 80mm
278394-0004894	SCO Bar N1NO Fraiser IC 20 Wty red 60
278394-0004911	SCO Bar N1NO Fraiser IC 20 Wty red 70mm
278394-0012368	SCO Bar N1NO Fraiser IC 20 Wty silver 90mm
278394-0012375	SCO Bar N1NO Fraiser IC 20 Wty silver 80mm
278394-0012894	SCO Bar N1NO Fraiser IC 20 Wty silver 60
278394-0012911	SCO Bar N1NO Fraiser IC 20 Wty silver 70mm
278395-0002365	SCO Bar Gen/Ran LTD Hixon 20 Wty white 40mm
278395-0002366	SCO Bar Gen/Ran LTD Hixon 20 Wty white 50mm
278395-0012365	SCO Bar Gen/Ran LTD Hixon 20 Wty silver 40mm
278395-0012366	SCO Bar Gen/Ran LTD Hixon 20 Wty silver 50mm
278396-9999081	SCO Seatpost-Serv Air cartkit Duncan 2.5 no color 125
278396-9999091	SCO Seatpost-Serv Air cartkit Duncan 2.5 no color 150
278396-9999367	SCO Seatpost-Serv Air cartkit Duncan 2.5 no color 100mm
278397-9999081	SCO Seatpost-Serv Air cartkit Duncan 2.0 no color 125
278398-9999222	SCO Seatpost-Serv.seal kit Duncan 2.5 no color 1size
278399-9999222	SCO Seatpost-Serv.seal kit Duncan 2.0 no color 1size
278400-0001375	SCO Seatpost SY drop Dunc no lever Wty black 80mm
278401-0004941	SCO Seatpost N1NO Spark/Scale 20 Wty red 10mm
278401-0012941	SCO Seatpost N1NO Spark/Scale 20 Wty silver 10mm
278402-0004896	SCO Crankset N1NO Sram XX1 20 Wty red 170
278402-0004898	SCO Crankset N1NO Sram XX1 20 Wty red 175
278402-0012896	SCO Crankset N1NO Sram XX1 20 Wty silver 170
278402-0012898	SCO Crankset N1NO Sram XX1 20 Wty silver 175
278481-9999716	SYN Wheel Capital 1.0 35 FW 20 no color 700C
278482-9999716	SYN Wheel Capital 1.0 50 FW 20 no color 700C
278483-9999716	SYN Wheel Capital 1.0 X40 FW 20 no color 700C

278484-9999716	SYN Wheel Capital 1.0 35 RW 20 no color 700C
278485-9999716	SYN Wheel Capital 1.0 50 RW 20 no color 700C
278486-9999716	SYN Wheel Capital 1.0 X40 RW 20 no color 700C
278724-9999222	SCO Cableguide noodle Trunnion R/S 20 no color 1size
278725-0001222	SCO Cableguide rubber Trunnion R/S 20 black 1size
278726-9999222	SCO Tool hub/gear ring Form 39T MTB no color 1size
278727-9999222	SCO Hub rep gear ring Form 39T MTB no color 1size
278728-0001222	SCO eRIDE Bat cover Sub UNI 20 black 1size
278728-0003222	SCO eRIDE Bat cover Sub UNI 20 blue 1size
278728-0011222	SCO eRIDE Bat cover Sub UNI 20 grey 1size
278729-9999367	SCO Seatpost-Serv Air cartkit Duncan no color 100mm
278729-9999372	SCO Seatpost-Serv Air cartkit Duncan no color 120mm
278729-9999375	SCO Seatpost-Serv Air cartkit Duncan no color 80mm
278730-9999375	SCO Seatpost-Serv Air cartkit Dunc 40kg no color 80mm
278731-9999222	SCO Tire Kenda Small block 8 24x1.5 Wty no color 1size
278870-9999222	SCO Hub rep kit SY Rev DH 1.5 6B F 20 no color 1size
278873-9999368	SCO Bar SY Creston IC SL 20 Wty no color 90mm
278873-9999372	SCO Bar SY Creston IC SL 20 Wty no color 120mm
278873-9999379	SCO Bar SY Creston IC SL 20 Wty no color 110mm
279065-9999222	SCO Hub rep kit Form SCT-2102 Shim R 20 no color 1size
279066-9999193	SCO Wheel 24" disc/V brake F no color 24"
279067-9999192	SCO Wheel 20" disc brake F no color 20"
279068-9999192	SCO Wheel 20" V brake F no color 20"
279069-9999193	SCO Wheel 24" Cassette disc/V brake R no color 24"
279070-9999192	SCO Wheel 20" Cassette disc brake R no color 20"
279071-9999192	SCO Wheel 20" MF V brake R no color 20"
279072-9999716	SCO eRIDE Rim Revelstoke-E 1.5 20 Wty no color 700C
279073-0001222	SCO eRIDE Front axle Silence Evo 20 Wty black 1size
279074-0001715	SCO Wheelset Scale 920 20 Wty black 29"
279075-0001715	SCO Wheelset Scale 950 20 Wty black 29"
279125-9999222	SCO Rear shock 185x50mm X-Fusion 20 Wty no color 1size
279126-9999222	SCO eRIDE Kickstand Silence 20 Wty no color 1size
279127-0001222	SYN Floor pump head Vernon 3.0 black 1size
279131-9999222	SCO XD Freehub FH-522 Wty no color 1size
279132-9999222	SCO Shimano Freehub FH-528 Wty no color 1size
279192-0001192	SCO Rim Alex C-1000 32h 20" black 20"
279747-0001222	SCO eRIDE Headset forkstop alloy 20 black 1size
279748-0001222	SCO eRIDE Headset forkstop carbon 20 black 1size
279749-0001222	SCO eRIDE Headset Strike alloy 20 black 1size
279750-0001222	SCO eRIDE Stem Spacer forkstop alloy 20 black 1size
279751-0001222	SCO eRIDE Stem Spacer forkstop carb 20 black 1size
280148-0012006	SCO Frame Scale RC 900 WC N1NO HMX Wty silver S
280148-0012007	SCO Frame Scale RC 900 WC N1NO HMX Wty silver M
280148-0012008	SCO Frame Scale RC 900 WC N1NO HMX Wty silver L
280148-0012009	SCO Frame Scale RC 900 WC N1NO HMX Wty silver XL
280155-0001060	SCO eRIDE Stem ER1.5 forkstop 20 black 50mm
280155-0001380	SCO eRIDE Stem ER1.5 forkstop 20 black 60mm
280155-0001911	SCO eRIDE Stem ER1.5 forkstop 20 black 70mm
280184-9999562	SCO Axle RWS Syncros lever only 20 no color T30
280184-9999945	SCO Axle RWS Syncros lever only 20 no color T25
281130-0001222	SCO Stem spacer kit SY Fraser iC 20 black 1size
281308-0001222	SCO eRIDE Bat cover Gen/strike carbon 20 black 1size
281309-0001222	SCO eRIDE Motor cov Gen/strike carbon 20 black 1size
281309-0036222	SCO eRIDE Motor cov Gen/strike carbon 20 orange 1size
281518-0012006	SCO Frame Scale RC 900 SL 20 Wty silver S
281518-0012007	SCO Frame Scale RC 900 SL 20 Wty silver M
281518-0012008	SCO Frame Scale RC 900 SL 20 Wty silver L
281518-0012009	SCO Frame Scale RC 900 SL 20 Wty silver XL

Spare parts 2021	
Article number	**Description**
282361-6973006	SCO Front triangle Spark RC 900 SL 21 Pris grn prp S
282361-6973007	SCO Front triangle Spark RC 900 SL 21 Pris grn prp M
282361-6973008	SCO Front triangle Spark RC 900 SL 21 Pris grn prp L
282361-6973009	SCO Front triangle Spark RC 900 SL 21 Pris grn prp XL
282362-6519006	SCO Front triangle Spark RC 900 W/C 21 radiu yellow S
282362-6519007	SCO Front triangle Spark RC 900 W/C 21 radiu yellow M
282362-6519008	SCO Front triangle Spark RC 900 W/C 21 radiu yellow L
282362-6519009	SCO Front triangle Spark RC 900 W/C 21 radiu yellow XL
282363-2101006	SCO Front triangle Spark RC 900 Pro 21 pearl white S
282363-2101007	SCO Front triangle Spark RC 900 Pro 21 pearl white M
282363-2101008	SCO Front triangle Spark RC 900 Pro 21 pearl white L
282363-2101009	SCO Front triangle Spark RC 900 Pro 21 pearl white XL
282364-6973006	SCO Front triangle Spark RC 900 T.I 21 Pris grn prp S
282364-6973007	SCO Front triangle Spark RC 900 T.I 21 Pris grn prp M
282364-6973008	SCO Front triangle Spark RC 900 T.I 21 Pris grn prp L
282364-6973009	SCO Front triangle Spark RC 900 T.I 21 Pris grn prp XL
282364-6993006	SCO Front triangle Spark RC 900 T.I 21 raw carbon S
282364-6993007	SCO Front triangle Spark RC 900 T.I 21 raw carbon M
282364-6993008	SCO Front triangle Spark RC 900 T.I 21 raw carbon L
282364-6993009	SCO Front triangle Spark RC 900 T.I 21 raw carbon XL
282365-6922006	SCO Front triangle Spark RC 900 Team 21 granit black S
282365-6922007	SCO Front triangle Spark RC 900 Team 21 granit black M
282365-6922008	SCO Front triangle Spark RC 900 Team 21 granit black L
282365-6922009	SCO Front triangle Spark RC 900 Team 21 granit black XL
282366-0091006	SCO Front triangle Spark RC 900 Comp 21 dark grey S
282366-0091007	SCO Front triangle Spark RC 900 Comp 21 dark grey M
282366-0091008	SCO Front triangle Spark RC 900 Comp 21 dark grey L
282366-0091009	SCO Front triangle Spark RC 900 Comp 21 dark grey XL
282366-6909006	SCO Front triangle Spark RC 900 Comp 21 florida red S
282366-6909007	SCO Front triangle Spark RC 900 Comp 21 florida red M
282366-6909008	SCO Front triangle Spark RC 900 Comp 21 florida red L
282366-6909009	SCO Front triangle Spark RC 900 Comp 21 florida red XL
282367-6919006	SCO Front triangle Cont Spark RC W/C 21 nitro purple S
282367-6919007	SCO Front triangle Cont Spark RC W/C 21 nitro purple M
282367-6919008	SCO Front triangle Cont Spark RC W/C 21 nitro purple L
282368-3095006	SCO Front triangle Cont Spark RC Comp 21 teal green S
282368-3095007	SCO Front triangle Cont Spark RC Comp 21 teal green M
282368-3095008	SCO Front triangle Cont Spark RC Comp 21 teal green L
282369-6834006	SCO Front triangle Cont Spark 910 21 brick red S
282369-6834007	SCO Front triangle Cont Spark 910 21 brick red M
282369-6834008	SCO Front triangle Cont Spark 910 21 brick red L
282370-6910006	SCO Front triangle Cont Spark 920 21 suf spra blu S
282370-6910007	SCO Front triangle Cont Spark 920 21 suf spra blu M
282370-6910008	SCO Front triangle Cont Spark 920 21 suf spra blu L
282371-6993006	SCO Front triangle Spark 900 Ultimate 21 raw carbon S
282371-6993007	SCO Front triangle Spark 900 Ultimate 21 raw carbon M
282371-6993008	SCO Front triangle Spark 900 Ultimate 21 raw carbon L
282371-6993009	SCO Front triangle Spark 900 Ultimate 21 raw carbon XL
282372-6921006	SCO Front triangle Spark 900 21 snow white S
282372-6921007	SCO Front triangle Spark 900 21 snow white M
282372-6921008	SCO Front triangle Spark 900 21 snow white L
282372-6921009	SCO Front triangle Spark 900 21 snow white XL
282373-0001006	SCO Front triangle Spark 910 21 black S
282373-0001007	SCO Front triangle Spark 910 21 black M
282373-0001008	SCO Front triangle Spark 910 21 black L
282373-0001009	SCO Front triangle Spark 910 21 black XL
282374-0114006	SCO Front triangle Spark 920 21 dark blue S
282374-0114007	SCO Front triangle Spark 920 21 dark blue M
282374-0114008	SCO Front triangle Spark 920 21 dark blue L
282374-0114009	SCO Front triangle Spark 920 21 dark blue XL
282375-6753006	SCO Front triangle Spark 930 21 Spectrm gren S
282375-6753007	SCO Front triangle Spark 930 21 Spectrm gren M
282375-6753008	SCO Front triangle Spark 930 21 Spectrm gren L

282375-6753009	SCO Front triangle Spark 930 21 Spectrm gren XL
282376-6921006	SCO Front triangle Genius 900 Tuned 21 snow white S
282376-6921007	SCO Front triangle Genius 900 Tuned 21 snow white M
282376-6921008	SCO Front triangle Genius 900 Tuned 21 snow white L
282376-6921009	SCO Front triangle Genius 900 Tuned 21 snow white XL
282377-0001006	SCO Front triangle Genius 910 21 black S
282377-0001007	SCO Front triangle Genius 910 21 black M
282377-0001008	SCO Front triangle Genius 910 21 black L
282377-0001009	SCO Front triangle Genius 910 21 black XL
282378-0011006	SCO Front triangle Genius 920 21 grey S
282378-0011007	SCO Front triangle Genius 920 21 grey M
282378-0011008	SCO Front triangle Genius 920 21 grey L
282378-0011009	SCO Front triangle Genius 920 21 grey XL
282379-2879006	SCO Front triangle Genius 930 21 rusty red S
282379-2879007	SCO Front triangle Genius 930 21 rusty red M
282379-2879008	SCO Front triangle Genius 930 21 rusty red L
282379-2879009	SCO Front triangle Genius 930 21 rusty red XL
282380-6911006	SCO Front triangle Genius 940 21 land green S
282380-6911007	SCO Front triangle Genius 940 21 land green M
282380-6911008	SCO Front triangle Genius 940 21 land green L
282380-6911009	SCO Front triangle Genius 940 21 land green XL
282381-6921006	SCO Front triangle Ransom 900 Tuned 21 snow white S
282381-6921007	SCO Front triangle Ransom 900 Tuned 21 snow white M
282381-6921008	SCO Front triangle Ransom 900 Tuned 21 snow white L
282381-6921009	SCO Front triangle Ransom 900 Tuned 21 snow white XL
282382-6911006	SCO Front triangle Ransom 910 21 land green S
282382-6911007	SCO Front triangle Ransom 910 21 land green M
282382-6911008	SCO Front triangle Ransom 910 21 land green L
282382-6911009	SCO Front triangle Ransom 910 21 land green XL
282383-6921006	SCO Front triangle Gambler 900 Tuned 21 snow white S
282383-6921007	SCO Front triangle Gambler 900 Tuned 21 snow white M
282383-6921008	SCO Front triangle Gambler 900 Tuned 21 snow white L
282383-6921009	SCO Front triangle Gambler 900 Tuned 21 snow white XL
282384-6911006	SCO Front triangle Gambler 910 21 land green S
282384-6911007	SCO Front triangle Gambler 910 21 land green M
282384-6911008	SCO Front triangle Gambler 910 21 land green L
282384-6911009	SCO Front triangle Gambler 910 21 land green XL
282385-6974006	SCO Front triangle Gambler 920 21 raw all smok S
282385-6974007	SCO Front triangle Gambler 920 21 raw all smok M
282385-6974008	SCO Front triangle Gambler 920 21 raw all smok L
282385-6974009	SCO Front triangle Gambler 920 21 raw all smok XL
282386-5576006	SCO Front triangle Gambler 930 21 matt black S
282386-5576007	SCO Front triangle Gambler 930 21 matt black M
282386-5576008	SCO Front triangle Gambler 930 21 matt black L
282386-5576009	SCO Front triangle Gambler 930 21 matt black XL
282387-6980006	SCO Front triangle Cont Genius 910 21 Red cinnabar S
282387-6980007	SCO Front triangle Cont Genius 910 21 Red cinnabar M
282387-6980008	SCO Front triangle Cont Genius 910 21 Red cinnabar L
282388-0001006	SCO Front triangle Ransom eRIDE 910 21 black S
282388-0001007	SCO Front triangle Ransom eRIDE 910 21 black M
282388-0001008	SCO Front triangle Ransom eRIDE 910 21 black L
282388-0001009	SCO Front triangle Ransom eRIDE 910 21 black XL
282389-6911006	SCO Front triangle Ransom eRIDE 920 21 land green S
282389-6911007	SCO Front triangle Ransom eRIDE 920 21 land green M
282389-6911008	SCO Front triangle Ransom eRIDE 920 21 land green L
282389-6911009	SCO Front triangle Ransom eRIDE 920 21 land green XL
282390-6921006	SCO Front triangle Genius eRIDE TND 21 snow white S
282390-6921007	SCO Front triangle Genius eRIDE TND 21 snow white M
282390-6921008	SCO Front triangle Genius eRIDE TND 21 snow white L
282390-6921009	SCO Front triangle Genius eRIDE TND 21 snow white XL
282391-6993006	SCO Front triangle Genius eRIDE 900 21 raw carbon S
282391-6993007	SCO Front triangle Genius eRIDE 900 21 raw carbon M
282391-6993008	SCO Front triangle Genius eRIDE 900 21 raw carbon L
282391-6993009	SCO Front triangle Genius eRIDE 900 21 raw carbon XL

282392-6981006	SCO Front triangle Genius eRIDE 910 21 prim kom grn S
282392-6981007	SCO Front triangle Genius eRIDE 910 21 prim kom grn M
282392-6981008	SCO Front triangle Genius eRIDE 910 21 prim kom grn L
282392-6981009	SCO Front triangle Genius eRIDE 910 21 prim kom grn XL
282393-6984006	SCO Front triangle Genius eRIDE 920 21 Juniper blue S
282393-6984007	SCO Front triangle Genius eRIDE 920 21 Juniper blue M
282393-6984008	SCO Front triangle Genius eRIDE 920 21 Juniper blue L
282393-6984009	SCO Front triangle Genius eRIDE 920 21 Juniper blue XL
282394-6522006	SCO Front triangle Genius eRIDE 930 21 fire orange S
282394-6522007	SCO Front triangle Genius eRIDE 930 21 fire orange M
282394-6522008	SCO Front triangle Genius eRIDE 930 21 fire orange L
282394-6522009	SCO Front triangle Genius eRIDE 930 21 fire orange XL
282395-6993006	SCO Front triangle Strike eRIDE PRE 21 raw carbon S
282395-6993007	SCO Front triangle Strike eRIDE PRE 21 raw carbon M
282395-6993008	SCO Front triangle Strike eRIDE PRE 21 raw carbon L
282395-6993009	SCO Front triangle Strike eRIDE PRE 21 raw carbon XL
282396-6982006	SCO Front triangle Strike eRIDE 900 21 Pris gry grn S
282396-6982007	SCO Front triangle Strike eRIDE 900 21 Pris gry grn M
282396-6982008	SCO Front triangle Strike eRIDE 900 21 Pris gry grn L
282396-6982009	SCO Front triangle Strike eRIDE 900 21 Pris gry grn XL
282397-6983006	SCO Front triangle Strike eRIDE 910 21 Stellar blue S
282397-6983007	SCO Front triangle Strike eRIDE 910 21 Stellar blue M
282397-6983008	SCO Front triangle Strike eRIDE 910 21 Stellar blue L
282397-6983009	SCO Front triangle Strike eRIDE 910 21 Stellar blue XL
282398-6974006	SCO Front triangle Strike eRIDE 920 21 raw all smok S
282398-6974007	SCO Front triangle Strike eRIDE 920 21 raw all smok M
282398-6974008	SCO Front triangle Strike eRIDE 920 21 raw all smok L
282398-6974009	SCO Front triangle Strike eRIDE 920 21 raw all smok XL
282399-6922006	SCO Front triangle Strike eRIDE 930 21 granit black S
282399-6922007	SCO Front triangle Strike eRIDE 930 21 granit black M
282399-6922008	SCO Front triangle Strike eRIDE 930 21 granit black L
282399-6922009	SCO Front triangle Strike eRIDE 930 21 granit black XL
282399-6984006	SCO Front triangle Strike eRIDE 930 21 Juniper blue S
282399-6984007	SCO Front triangle Strike eRIDE 930 21 Juniper blue M
282399-6984008	SCO Front triangle Strike eRIDE 930 21 Juniper blue L
282399-6984009	SCO Front triangle Strike eRIDE 930 21 Juniper blue XL
282400-2101006	SCO Front triangle Strike eRIDE 940 21 pearl white S
282400-2101007	SCO Front triangle Strike eRIDE 940 21 pearl white M
282400-2101008	SCO Front triangle Strike eRIDE 940 21 pearl white L
282400-2101009	SCO Front triangle Strike eRIDE 940 21 pearl white XL
282401-6973006	SCO Front triangle Axis eRIDE Evo 45K 21 Pris grn prp S
282401-6973007	SCO Front triangle Axis eRIDE Evo 45K 21 Pris grn prp M
282401-6973008	SCO Front triangle Axis eRIDE Evo 45K 21 Pris grn prp L
282401-6973009	SCO Front triangle Axis eRIDE Evo 45K 21 Pris grn prp XL
282402-6984006	SCO Front triangle Axis eRIDE Evo 21 Juniper blue S
282402-6984007	SCO Front triangle Axis eRIDE Evo 21 Juniper blue M
282402-6984008	SCO Front triangle Axis eRIDE Evo 21 Juniper blue L
282402-6984009	SCO Front triangle Axis eRIDE Evo 21 Juniper blue XL
282403-6519006	SCO Frame Scale RC 900 W/C 21 Wty radiu yellow S
282403-6519007	SCO Frame Scale RC 900 W/C 21 Wty radiu yellow M
282403-6519008	SCO Frame Scale RC 900 W/C 21 Wty radiu yellow L
282403-6519009	SCO Frame Scale RC 900 W/C 21 Wty radiu yellow XL
282404-6973006	SCO Frame Scale RC 900 T.I 21 Wty Pris grn prp S
282404-6973007	SCO Frame Scale RC 900 T.I 21 Wty Pris grn prp M
282404-6973008	SCO Frame Scale RC 900 T.I 21 Wty Pris grn prp L
282404-6973009	SCO Frame Scale RC 900 T.I 21 Wty Pris grn prp XL
282405-6921006	SCO Frame Scale RC 900 Team 21 Wty snow white S
282405-6921007	SCO Frame Scale RC 900 Team 21 Wty snow white M
282405-6921008	SCO Frame Scale RC 900 Team 21 Wty snow white L
282405-6921009	SCO Frame Scale RC 900 Team 21 Wty snow white XL
282406-6982006	SCO Frame Scale 910 21 Wty Pris gry grn S
282406-6982007	SCO Frame Scale 910 21 Wty Pris gry grn M
282406-6982008	SCO Frame Scale 910 21 Wty Pris gry grn L
282406-6982009	SCO Frame Scale 910 21 Wty Pris gry grn XL

282407-6922006	SCO Frame Scale 950 21 Wty granit black S
282407-6922007	SCO Frame Scale 950 21 Wty granit black M
282407-6922008	SCO Frame Scale 950 21 Wty granit black L
282407-6922009	SCO Frame Scale 950 21 Wty granit black XL
282407-6922010	SCO Frame Scale 950 21 Wty granit black XXL
282408-0091006	SCO Frame Scale 970 21 Wty dark grey S
282408-0091007	SCO Frame Scale 970 21 Wty dark grey M
282408-0091008	SCO Frame Scale 970 21 Wty dark grey L
282408-0091009	SCO Frame Scale 970 21 Wty dark grey XL
282408-0091010	SCO Frame Scale 970 21 Wty dark grey XXL
282408-6540006	SCO Frame Scale 970 21 Wty spicy red S
282408-6540007	SCO Frame Scale 970 21 Wty spicy red M
282408-6540008	SCO Frame Scale 970 21 Wty spicy red L
282408-6540009	SCO Frame Scale 970 21 Wty spicy red XL
282408-6540010	SCO Frame Scale 970 21 Wty spicy red XXL
282409-3095006	SCO Frame Cont Scale 910 21 Wty teal green S
282409-3095007	SCO Frame Cont Scale 910 21 Wty teal green M
282409-3095008	SCO Frame Cont Scale 910 21 Wty teal green L
282410-6974006	SCO Frame Spark 950 21 Wty raw all smok S
282410-6974007	SCO Frame Spark 950 21 Wty raw all smok M
282410-6974008	SCO Frame Spark 950 21 Wty raw all smok L
282410-6974009	SCO Frame Spark 950 21 Wty raw all smok XL
282411-0001006	SCO Frame Spark 970 21 Wty black S
282411-0001007	SCO Frame Spark 970 21 Wty black M
282411-0001008	SCO Frame Spark 970 21 Wty black L
282411-0001009	SCO Frame Spark 970 21 Wty black XL
282412-6974006	SCO Frame Genius 950 21 Wty raw all smok S
282412-6974007	SCO Frame Genius 950 21 Wty raw all smok M
282412-6974008	SCO Frame Genius 950 21 Wty raw all smok L
282412-6974009	SCO Frame Genius 950 21 Wty raw all smok XL
282413-6974006	SCO Frame Ransom 920 21 Wty raw all smok S
282413-6974007	SCO Frame Ransom 920 21 Wty raw all smok M
282413-6974008	SCO Frame Ransom 920 21 Wty raw all smok L
282413-6974009	SCO Frame Ransom 920 21 Wty raw all smok XL
282414-6984005	SCO Frame Aspect 910 21 Wty Juniper blue XS
282414-6984006	SCO Frame Aspect 910 21 Wty Juniper blue S
282414-6984007	SCO Frame Aspect 910 21 Wty Juniper blue M
282414-6984008	SCO Frame Aspect 910 21 Wty Juniper blue L
282414-6984009	SCO Frame Aspect 910 21 Wty Juniper blue XL
282414-6984010	SCO Frame Aspect 910 21 Wty Juniper blue XXL
282415-2101005	SCO Frame Aspect 930 21 Wty pearl white XS
282415-2101006	SCO Frame Aspect 930 21 Wty pearl white S
282415-2101007	SCO Frame Aspect 930 21 Wty pearl white M
282415-2101008	SCO Frame Aspect 930 21 Wty pearl white L
282415-2101009	SCO Frame Aspect 930 21 Wty pearl white XL
282415-2101010	SCO Frame Aspect 930 21 Wty pearl white XXL
282416-6985005	SCO Frame Aspect 950 21 Wty Slate grey XS
282416-6985006	SCO Frame Aspect 950 21 Wty Slate grey S
282416-6985007	SCO Frame Aspect 950 21 Wty Slate grey M
282416-6985008	SCO Frame Aspect 950 21 Wty Slate grey L
282416-6985009	SCO Frame Aspect 950 21 Wty Slate grey XL
282416-6985010	SCO Frame Aspect 950 21 Wty Slate grey XXL
282417-6922005	SCO Frame Aspect 740 21 Wty granit black XS
282417-6922006	SCO Frame Aspect 740 21 Wty granit black S
282417-6922007	SCO Frame Aspect 740 21 Wty granit black M
282417-6922008	SCO Frame Aspect 740 21 Wty granit black L
282418-6985005	SCO Frame Aspect 750 21 Wty Slate grey XS
282418-6985006	SCO Frame Aspect 750 21 Wty Slate grey S
282418-6985007	SCO Frame Aspect 750 21 Wty Slate grey M
282418-6985008	SCO Frame Aspect 750 21 Wty Slate grey L
282419-6980006	SCO Frame Cont Scale 940 21 Wty Red cinnabar S
282419-6980007	SCO Frame Cont Scale 940 21 Wty Red cinnabar M
282419-6980008	SCO Frame Cont Scale 940 21 Wty Red cinnabar L
282420-6910006	SCO Frame Cont Scale 950 21 Wty suf spra blu S

282420-6910007	SCO Frame Cont Scale 950 21 Wty suf spra blu M
282420-6910008	SCO Frame Cont Scale 950 21 Wty suf spra blu L
282421-6039006	SCO Frame Cont Spark 930 21 Wty laven purp S
282421-6039007	SCO Frame Cont Spark 930 21 Wty laven purp M
282421-6039008	SCO Frame Cont Spark 930 21 Wty laven purp L
282422-3095879	SCO Frame Cont Active 10 21 Wty teal green S7
282422-3095881	SCO Frame Cont Active 10 21 Wty teal green M9
282422-3095882	SCO Frame Cont Active 10 21 Wty teal green L9
282422-3095888	SCO Frame Cont Active 10 21 Wty teal green XS7
282423-6977879	SCO Frame Cont Active 20 21 Wty Clay purple S7
282423-6977881	SCO Frame Cont Active 20 21 Wty Clay purple M9
282423-6977882	SCO Frame Cont Active 20 21 Wty Clay purple L9
282423-6977888	SCO Frame Cont Active 20 21 Wty Clay purple XS7
282424-3095006	SCO Frame Cont Genius 920 21 Wty teal green S
282424-3095007	SCO Frame Cont Genius 920 21 Wty teal green M
282424-3095008	SCO Frame Cont Genius 920 21 Wty teal green L
282425-6987006	SCO Frame Aspect eRIDE 910 21 Wty silver white S
282425-6987007	SCO Frame Aspect eRIDE 910 21 Wty silver white M
282425-6987008	SCO Frame Aspect eRIDE 910 21 Wty silver white L
282425-6987009	SCO Frame Aspect eRIDE 910 21 Wty silver white XL
282426-6979006	SCO Frame Aspect eRIDE 930 21 Wty Gry petr blu S
282426-6979007	SCO Frame Aspect eRIDE 930 21 Wty Gry petr blu M
282426-6979008	SCO Frame Aspect eRIDE 930 21 Wty Gry petr blu L
282426-6979009	SCO Frame Aspect eRIDE 930 21 Wty Gry petr blu XL
282427-6987006	SCO Frame Aspect eRIDE 950 21 Wty silver white S
282427-6987007	SCO Frame Aspect eRIDE 950 21 Wty silver white M
282427-6987008	SCO Frame Aspect eRIDE 950 21 Wty silver white L
282427-6987009	SCO Frame Aspect eRIDE 950 21 Wty silver white XL
282428-0001006	SCO Frame Axis eRIDE 10 men 21 Wty black S
282428-0001007	SCO Frame Axis eRIDE 10 men 21 Wty black M
282428-0001008	SCO Frame Axis eRIDE 10 men 21 Wty black L
282428-0001009	SCO Frame Axis eRIDE 10 men 21 Wty black XL
282429-0002006	SCO Frame Axis eRIDE 10 Lady 21 Wry white S
282429-0002007	SCO Frame Axis eRIDE 10 Lady 21 Wry white M
282429-0002008	SCO Frame Axis eRIDE 10 Lady 21 Wry white L
282430-6911222	SCO Frame Ranson Future Pro 21 Wty land green 1size
282431-6353194	SCO Frameset Scale RC 600 Future Pro 21 pale grey 26"
282432-6353193	SCO Frameset Scale RC 400 Future Pro 21 pale grey 24"
282433-6930193	SCO Frameset Scale 24 rigid 21 Wty smith green 24"
282434-6522192	SCO Frameset Scale 20 rigid 21 Wty fire orange 20"
282435-6974193	SCO Framset Roxter 24 rigid 21 Wty raw all smok 24"
282436-6974192	SCO Framset Roxter 20 rigid 21 Wty raw all smok 20"
282437-2101222	SCO Chainstays Genius 900 Tuned 21 pearl white 1size
282438-6922222	SCO Chainstays Genius 910 21 granit black 1size
282439-6986222	SCO Chainstays Genius 920 21 Wolf grey 1size
282440-2879222	SCO Chainstays Genius 930 21 rusty red 1size
282441-6911222	SCO Chainstays Genius 940 21 land green 1size
282442-2101222	SCO Chainstays Ransom 900 Tuned 21 pearl white 1size
282443-6911222	SCO Chainstays Ransom 910 21 land green 1size
282444-2101222	SCO Chainstays Gambler 900 Tuned 21 pearl white 1size
282445-6911222	SCO Chainstays Gambler 910 21 land green 1size
282446-6974222	SCO Chainstays Gambler 920 21 raw all smok 1size
282447-5576222	SCO Chainstays Gambler 930 21 matt black 1size
282448-6980222	SCO Chainstays Cont Genius 910 21 Red cinnabar 1size
282449-0001222	SCO Chainstays Ransom eRIDE 910 21 black 1size
282450-6911222	SCO Chainstays Ransom eRIDE 920 21 land green 1size
282451-2101222	SCO Chainstays Genius eRIDE TND 21 pearl white 1size
282452-6993222	SCO Chainstays Genius eRIDE 900 21 raw carbon 1size
282453-6981222	SCO Chainstays Genius eRIDE 910 21 prim kom grn 1size
282454-6984222	SCO Chainstays Genius eRIDE 920 21 Juniper blue 1size
282455-6522222	SCO Chainstays Genius eRIDE 930 21 fire orange 1size
282456-6993222	SCO Chainstays Strike eRIDE PRE 21 raw carbon 1size
282457-6982222	SCO Chainstays Strike eRIDE 900 21 Pris gry grn 1size
282458-6983222	SCO Chainstays Strike eRIDE 910 21 Stellar blue 1size

282459-6974222	SCO Chainstays Strike eRIDE 920 21 raw all smok 1size
282460-6922222	SCO Chainstays Strike eRIDE 930 21 granit black 1size
282460-6984222	SCO Chainstays Strike eRIDE 930 21 Juniper blue 1size
282461-2101222	SCO Chainstays Strike eRIDE 940 21 pearl white 1size
282462-6973222	SCO Chainstays Axis eRIDE Evo 45KM 21 Pris grn prp 1size
282463-6984222	SCO Chainstays Axis eRIDE Evo 21 Juniper blue 1size
282464-2101222	SCO Seatstays Genius 900 Tuned 21 pearl white 1size
282465-6922222	SCO Seatstays Genius 910 21 granit black 1size
282466-6986222	SCO Seatstays Genius 920 21 Wolf grey 1size
282467-2879222	SCO Seatstays Genius 930 21 rusty red 1size
282468-6911222	SCO Seatstays Genius 940 21 land green 1size
282469-2101222	SCO Seatstays Ransom 900 Tuned 21 pearl white 1size
282470-6911222	SCO Seatstays Ransom 910 21 land green 1size
282471-2101222	SCO Seatstays Gambler 900 Tuned 21 pearl white 1size
282472-6911222	SCO Seatstays Gambler 910 21 land green 1size
282473-6974222	SCO Seatstays Gambler 920 21 raw all smok 1size
282474-0001222	SCO Seatstays Gambler 930 21 black 1size
282475-6980222	SCO Seatstays Cont Genius 910 21 Red cinnabar 1size
282476-0001222	SCO Seatstays Ransom eRIDE 910 21 black 1size
282477-6911222	SCO Seatstays Ransom eRIDE 920 21 land green 1size
282478-2101222	SCO Seatstays Genius eRIDE TND 21 pearl white 1size
282479-6993222	SCO Seatstays Genius eRIDE 900 21 raw carbon 1size
282480-6981222	SCO Seatstays Genius eRIDE 910 21 prim kom grn 1size
282481-6984222	SCO Seatstays Genius eRIDE 920 21 Juniper blue 1size
282482-6522222	SCO Seatstays Genius eRIDE 930 21 fire orange 1size
282483-6993222	SCO Seatstays Strike eRIDE PRE 21 raw carbon 1size
282484-6982222	SCO Seatstays Strike eRIDE 900 21 Pris gry grn 1size
282485-6983222	SCO Seatstays Strike eRIDE 910 21 Stellar blue 1size
282486-6974222	SCO Seatstays Strike eRIDE 920 21 raw all smok 1size
282487-6922222	SCO Seatstays Strike eRIDE 930 21 granit black 1size
282487-6984222	SCO Seatstays Strike eRIDE 930 21 Juniper blue 1size
282488-2101222	SCO Seatstays Strike eRIDE 940 21 pearl white 1size
282489-6973222	SCO Seatstays Axis eRIDE Evo 45Km 21 Pris grn prp 1size
282490-6984222	SCO Seatstays Axis eRIDE Evo 21 Juniper blue 1size
282491-6973222	SCO Swingarm Spark RC 900 SL 21 Pris grn prp 1size
282492-6519222	SCO Swingarm Spark RC 900 W/C 21 radiu yellow 1size
282493-2101222	SCO Swingarm Spark RC 900 Pro 21 pearl white 1size
282494-6973222	SCO Swingarm Spark RC 900 T.I 21 Pris grn prp 1size
282494-6993222	SCO Swingarm Spark RC 900 T.I 21 raw carbon 1size
282495-6922222	SCO Swingarm Spark RC 900 Team 21 granit black 1size
282496-0091222	SCO Swingarm Spark RC 900 Comp 21 dark grey 1size
282496-6909222	SCO Swingarm Spark RC 900 Comp 21 florida red 1size
282497-6919222	SCO Swingarm Cont Spark RC W/C 21 nitro purple 1size
282498-3095222	SCO Swingarm Cont Spark RC Comp 21 teal green 1size
282499-6834222	SCO Swingarm Cont Spark 910 21 brick red 1size
282500-6910222	SCO Swingarm Cont Spark 920 21 suf spra blu 1size
282501-6993222	SCO Swingarm Spark 900 Ulti-mate 21 raw carbon 1size
282502-2101222	SCO Swingarm Spark 900 21 pearl white 1size
282503-6988222	SCO Swingarm Spark 910 21 Lazer black 1size
282504-6983222	SCO Swingarm Spark 920 21 Stellar blue 1size
282505-6753222	SCO Swingarm Spark 930 21 Spectrm gren 1size
282506-6973020	SCO Frameset Plasma PR 21 Wty Pris grn prp XS49
282506-6973021	SCO Frameset Plasma PR 21 Wty Pris grn prp S52
282506-6973022	SCO Frameset Plasma PR 21 Wty Pris grn prp M54
282506-6973023	SCO Frameset Plasma PR 21 Wty Pris grn prp L56
282506-6973024	SCO Frameset Plasma PR 21 Wty Pris grn prp XL58
282507-6981020	SCO Frameset Plasma RC 21 Wty prim kom grn XS49
282507-6981021	SCO Frameset Plasma RC 21 Wty prim kom grn S52
282507-6981022	SCO Frameset Plasma RC 21 Wty prim kom grn M54
282507-6981023	SCO Frameset Plasma RC 21 Wty prim kom grn L56
282507-6981024	SCO Frameset Plasma RC 21 Wty prim kom grn XL58
282508-6993019	SCO Frameset Foil Pro 21 Wty raw carbon XXS47
282508-6993020	SCO Frameset Foil Pro 21 Wty raw carbon XS49
282508-6993021	SCO Frameset Foil Pro 21 Wty raw carbon S52

282508-6993022	SCO Frameset Foil Pro 21 Wty raw carbon M54
282508-6993023	SCO Frameset Foil Pro 21 Wty raw carbon L56
282508-6993024	SCO Frameset Foil Pro 21 Wty raw carbon XL58
282508-6993025	SCO Frameset Foil Pro 21 Wty raw carbon 2XL61
282509-6973019	SCO Frameset Foil 10 21 Wty Pris grn prp XXS47
282509-6973020	SCO Frameset Foil 10 21 Wty Pris grn prp XS49
282509-6973021	SCO Frameset Foil 10 21 Wty Pris grn prp S52
282509-6973022	SCO Frameset Foil 10 21 Wty Pris grn prp M54
282509-6973023	SCO Frameset Foil 10 21 Wty Pris grn prp L56
282509-6973024	SCO Frameset Foil 10 21 Wty Pris grn prp XL58
282509-6973025	SCO Frameset Foil 10 21 Wty Pris grn prp 2XL61
282510-6993019	SCO Frameset Addict RC Ultimate D 21 Wty raw carbon XXS47
282510-6993020	SCO Frameset Addict RC Ultimate D 21 Wty raw carbon XS49
282510-6993021	SCO Frameset Addict RC Ultimate D 21 Wty raw carbon S52
282510-6993022	SCO Frameset Addict RC Ultimate D 21 Wty raw carbon M54
282510-6993023	SCO Frameset Addict RC Ultimate D 21 Wty raw carbon L56
282510-6993024	SCO Frameset Addict RC Ultimate D 21 Wty raw carbon XL58
282510-6993025	SCO Frameset Addict RC Ultimate D 21 Wty raw carbon 2XL61
282511-6973019	SCO Frameset Addict RC Pro D 21 Wty Pris grn prp XXS47
282511-6973020	SCO Frameset Addict RC Pro D 21 Wty Pris grn prp XS49
282511-6973021	SCO Frameset Addict RC Pro D 21 Wty Pris grn prp S52
282511-6973022	SCO Frameset Addict RC Pro D 21 Wty Pris grn prp M54
282511-6973023	SCO Frameset Addict RC Pro D 21 Wty Pris grn prp L56
282511-6973024	SCO Frameset Addict RC Pro D 21 Wty Pris grn prp XL58
282511-6973025	SCO Frameset Addict RC Pro D 21 Wty Pris grn prp 2XL61
282512-6976019	SCO Frameset Addict SE D 21 Wty Chamelen grn XXS47
282512-6976020	SCO Frameset Addict SE D 21 Wty Chamelen grn XS49
282512-6976021	SCO Frameset Addict SE D 21 Wty Chamelen grn S52
282512-6976022	SCO Frameset Addict SE D 21 Wty Chamelen grn M54
282512-6976023	SCO Frameset Addict SE D 21 Wty Chamelen grn L56
282512-6976024	SCO Frameset Addict SE D 21 Wty Chamelen grn XL58
282512-6976025	SCO Frameset Addict SE D 21 Wty Chamelen grn 2XL61
282513-6519019	SCO Frameset Addict 30 21 Wty radiu yellow XXS47
282513-6519020	SCO Frameset Addict 30 21 Wty radiu yellow XS49
282513-6519021	SCO Frameset Addict 30 21 Wty radiu yellow S52
282513-6519022	SCO Frameset Addict 30 21 Wty radiu yellow M54
282513-6519023	SCO Frameset Addict 30 21 Wty radiu yellow L56
282513-6519024	SCO Frameset Addict 30 21 Wty radiu yellow XL58
282513-6519025	SCO Frameset Addict 30 21 Wty radiu yellow 2XL61
282514-6989019	SCO Frameset Metrix 10 21 Wty Onyx black XXS47
282514-6989020	SCO Frameset Metrix 10 21 Wty Onyx black XS49
282514-6989021	SCO Frameset Metrix 10 21 Wty Onyx black S52
282514-6989022	SCO Frameset Metrix 10 21 Wty Onyx black M54
282514-6989023	SCO Frameset Metrix 10 21 Wty Onyx black L56
282514-6989024	SCO Frameset Metrix 10 21 Wty Onyx black XL58
282514-6989025	SCO Frameset Metrix 10 21 Wty Onyx black 2XL61
282515-6990019	SCO Frameset Metrix 20 21 Wty Starry blue XXS47
282515-6990020	SCO Frameset Metrix 20 21 Wty Starry blue XS49
282515-6990021	SCO Frameset Metrix 20 21 Wty Starry blue S52
282515-6990022	SCO Frameset Metrix 20 21 Wty Starry blue M54
282515-6990023	SCO Frameset Metrix 20 21 Wty Starry blue L56
282515-6990024	SCO Frameset Metrix 20 21 Wty Starry blue XL58
282515-6990025	SCO Frameset Metrix 20 21 Wty Starry blue 2XL61
282516-6985019	SCO Frameset Metrix 30 21 Wty Slate grey XXS47
282516-6985020	SCO Frameset Metrix 30 21 Wty Slate grey XS49
282516-6985021	SCO Frameset Metrix 30 21 Wty Slate grey S52
282516-6985022	SCO Frameset Metrix 30 21 Wty Slate grey M54
282516-6985023	SCO Frameset Metrix 30 21 Wty Slate grey L56
282516-6985024	SCO Frameset Metrix 30 21 Wty Slate grey XL58
282516-6985025	SCO Frameset Metrix 30 21 Wty Slate grey 2XL61
282517-2878020	SCO Frameset Addict Gravel 10 21 Wty mint green XS49
282517-2878021	SCO Frameset Addict Gravel 10 21 Wty mint green S52
282517-2878022	SCO Frameset Addict Gravel 10 21 Wty mint green M54
282517-2878023	SCO Frameset Addict Gravel 10 21 Wty mint green L56

282517-2878024	SCO Frameset Addict Gravel 10 21 Wty mint green XL58
282518-6919019	SCO Frameset Cont Addict RC 15 21 Wty nitro purple XXS47
282518-6919020	SCO Frameset Cont Addict RC 15 21 Wty nitro purple XS49
282518-6919021	SCO Frameset Cont Addict RC 15 21 Wty nitro purple S52
282518-6919022	SCO Frameset Cont Addict RC 15 21 Wty nitro purple M54
282518-6919023	SCO Frameset Cont Addict RC 15 21 Wty nitro purple L56
282519-6910019	SCO Frameset Cont Addict 15 D 21 Wty suf spra blu XXS47
282519-6910020	SCO Frameset Cont Addict 15 D 21 Wty suf spra blu XS49
282519-6910021	SCO Frameset Cont Addict 15 D 21 Wty suf spra blu S52
282519-6910022	SCO Frameset Cont Addict 15 D 21 Wty suf spra blu M54
282519-6910023	SCO Frameset Cont Addict 15 D 21 Wty suf spra blu L56
282520-6919020	SCO Frameset Cont Addict Gra 15 21 Wty nitro purple XS49
282520-6919021	SCO Frameset Cont Addict Gra 15 21 Wty nitro purple S52
282520-6919022	SCO Frameset Cont Addict Gra 15 21 Wty nitro purple M54
282520-6919023	SCO Frameset Cont Addict Gra 15 21 Wty nitro purple L56
282521-6993005	SCO Frameset Addict eRIDE PR 21 Wty raw carbon XS
282521-6993006	SCO Frameset Addict eRIDE PR 21 Wty raw carbon S
282521-6993007	SCO Frameset Addict eRIDE PR 21 Wty raw carbon M
282521-6993008	SCO Frameset Addict eRIDE PR 21 Wty raw carbon L
282521-6993009	SCO Frameset Addict eRIDE PR 21 Wty raw carbon XL
282522-6985019	SCO Frameset Speedster 10 D 21 Wty Slate grey XXS47
282522-6985020	SCO Frameset Speedster 10 D 21 Wty Slate grey XS49
282522-6985021	SCO Frameset Speedster 10 D 21 Wty Slate grey S52
282522-6985022	SCO Frameset Speedster 10 D 21 Wty Slate grey M54
282522-6985023	SCO Frameset Speedster 10 D 21 Wty Slate grey L56
282522-6985024	SCO Frameset Speedster 10 D 21 Wty Slate grey XL58
282522-6985025	SCO Frameset Speedster 10 D 21 Wty Slate grey 2XL61
282523-0114019	SCO Frameset Speedster 10 21 Wty dark blue XXS47
282523-0114020	SCO Frameset Speedster 10 21 Wty dark blue XS49
282523-0114021	SCO Frameset Speedster 10 21 Wty dark blue S52
282523-0114022	SCO Frameset Speedster 10 21 Wty dark blue M54
282523-0114023	SCO Frameset Speedster 10 21 Wty dark blue L56
282523-0114024	SCO Frameset Speedster 10 21 Wty dark blue XL58
282523-0114025	SCO Frameset Speedster 10 21 Wty dark blue 2XL61
282524-6992019	SCO Frameset Speedster Gravel 10 21 Wty Pastel beige XXS47
282524-6992020	SCO Frameset Speedster Gravel 10 21 Wty Pastel beige XS49
282524-6992021	SCO Frameset Speedster Gravel 10 21 Wty Pastel beige S52
282524-6992022	SCO Frameset Speedster Gravel 10 21 Wty Pastel beige M54
282524-6992023	SCO Frameset Speedster Gravel 10 21 Wty Pastel beige L56
282524-6992024	SCO Frameset Speedster Gravel 10 21 Wty Pastel beige XL58
282524-6992025	SCO Frameset Speedster Gravel 10 21 Wty Pastel beige 2XL61
282525-6167006	SCO Frameset Sub Cross 50 Men 21 Wty dark bronze S
282525-6167007	SCO Frameset Sub Cross 50 Men 21 Wty dark bronze M
282525-6167008	SCO Frameset Sub Cross 50 Men 21 Wty dark bronze L
282525-6167009	SCO Frameset Sub Cross 50 Men 21 Wty dark bronze XL
282525-6167010	SCO Frameset Sub Cross 50 Men 21 Wty dark bronze XXL
282526-2101006	SCO Frameset Sub Cross 50 Lady 21 Wty pearl white S
282526-2101007	SCO Frameset Sub Cross 50 Lady 21 Wty pearl white M
282526-2101008	SCO Frameset Sub Cross 50 Lady 21 Wty pearl white L
282526-2101009	SCO Frameset Sub Cross 50 Lady 21 Wty pearl white XL
282527-2436006	SCO Frame Silence eRIDE 30 Men 21 dark brown S
282527-2436007	SCO Frame Silence eRIDE 30 Men 21 dark brown M
282527-2436008	SCO Frame Silence eRIDE 30 Men 21 dark brown L
282527-2436009	SCO Frame Silence eRIDE 30 Men 21 dark brown XL
282528-3095006	SCO Frame Silence eRIDE 30 Lady 21 teal green S
282528-3095007	SCO Frame Silence eRIDE 30 Lady 21 teal green M
282528-3095008	SCO Frame Silence eRIDE 30 Lady 21 teal green L
282529-6987006	SCO Frame Sub Sport eRIDE 10 Men 21 Wty silver white S
282529-6987007	SCO Frame Sub Sport eRIDE 10 Men 21 Wty silver white M
282529-6987008	SCO Frame Sub Sport eRIDE 10 Men 21 Wty silver white L
282529-6987009	SCO Frame Sub Sport eRIDE 10 Men 21 Wty silver white XL
282530-6987006	SCO Frame Sub Sport eRIDE 10 Lady 21 Wty silver white S
282530-6987007	SCO Frame Sub Sport eRIDE 10 Lady 21 Wty silver white M
282530-6987008	SCO Frame Sub Sport eRIDE 10 Lady 21 Wty silver white L

282531-6987005	SCO Frame Sub Sport eRIDE 10 USX 21 Wty silver white XS
282531-6987006	SCO Frame Sub Sport eRIDE 10 USX 21 Wty silver white S
282531-6987007	SCO Frame Sub Sport eRIDE 10 USX 21 Wty silver white M
282531-6987008	SCO Frame Sub Sport eRIDE 10 USX 21 Wty silver white L
282532-0001005	SCO Frame Sub Active eRIDE 10 USX rac 21 black XS
282532-0001006	SCO Frame Sub Active eRIDE 10 USX rac 21 black S
282532-0001007	SCO Frame Sub Active eRIDE 10 USX rac 21 black M
282532-0001008	SCO Frame Sub Active eRIDE 10 USX rac 21 black L
282533-6987006	SCO Frame Sub Sport 10 Men 21 Wty silver white S
282533-6987007	SCO Frame Sub Sport 10 Men 21 Wty silver white M
282533-6987008	SCO Frame Sub Sport 10 Men 21 Wty silver white L
282533-6987009	SCO Frame Sub Sport 10 Men 21 Wty silver white XL
282534-6987006	SCO Frame Sub Sport 10 Lady 21 Wty silver white S
282534-6987007	SCO Frame Sub Sport 10 Lady 21 Wty silver white M
282534-6987008	SCO Frame Sub Sport 10 Lady 21 Wty silver white L
282535-0044006	SCO Frame Sub Comfort 10 USX 21 Wty mossgreen S
282535-0044007	SCO Frame Sub Comfort 10 USX 21 Wty mossgreen M
282535-0044008	SCO Frame Sub Comfort 10 USX 21 Wty mossgreen L
282536-0086006	SCO Frame Sub Sport 40 Men 21 Wty dark green S
282536-0086007	SCO Frame Sub Sport 40 Men 21 Wty dark green M
282536-0086008	SCO Frame Sub Sport 40 Men 21 Wty dark green L
282536-0086009	SCO Frame Sub Sport 40 Men 21 Wty dark green XL
282537-6985006	SCO Frame Sub Cross 10 Men 21 Wty Slate grey S
282537-6985007	SCO Frame Sub Cross 10 Men 21 Wty Slate grey M
282537-6985008	SCO Frame Sub Cross 10 Men 21 Wty Slate grey L
282537-6985009	SCO Frame Sub Cross 10 Men 21 Wty Slate grey XL
282538-3095006	SCO Frame Sub Cross 10 Lady 21 Wty teal green S
282538-3095007	SCO Frame Sub Cross 10 Lady 21 Wty teal green M
282538-3095008	SCO Frame Sub Cross 10 Lady 21 Wty teal green L
282603-6353194	SCO Fork Scale RC 600 Future Pro 21 Wty pale grey 26"
282604-6353193	SCO Fork Scale RC 400 Future Pro 21 Wty pale grey 24"
282605-6930193	SCO Fork Scale 24 rigid 21 Wty smith green 24"
282606-6522192	SCO Fork Scale 20 rigid 21 Wty fire orange 20"
282607-6910192	SCO Fork Contessa 24 rigid 21 Wty suf spra blu 20"
282608-6910192	SCO Fork Contessa 20 rigid 21 Wty suf spra blu 20"
282609-5509193	SCO Fork Roxter 24 rigid 21 Wty teal blue 24"
282609-6974193	SCO Fork Roxter 24 rigid 21 Wty raw all smok 24"
282610-5509192	SCO Fork Roxter 20 rigid 21 Wty teal blue 20"
282610-6974192	SCO Fork Roxter 20 rigid 21 Wty raw all smok 20"
282611-6973716	SCO Fork Plasma Premium 21 Wty Pris grn prp 700C
282612-6981716	SCO Fork Plasma RC 21 Wty prim kom grn 700C
282613-6993716	SCO Fork Addict RC Ultimate 21 Wty raw carbon 700C
282614-0025716	SCO Fork Addict RC S-Sonic Ed 21 Wty purple 700C
282615-6973716	SCO Fork Addict RC Pro 21 Wty Pris grn prp 700C
282616-0025716	SCO Fork Foil S-Sonic Ed purple 700C
282617-6973716	SCO Fork Foil 10 21 Wty Pris grn prp 700C
282618-6989716	SCO Fork Foil 20 21 Wty Onyx black 700C
282619-6973716	SCO Fork Foil 30 21 Wty Pris grn prp 700C
282620-6993716	SCO Fork Foil Pro 21 Wty raw carbon 700C
282621-2101716	SCO Fork Addict RC 10 21 Wty pearl white 700C
282621-6982716	SCO Fork Addict RC 10 21 Wty Pris gry grn 700C
282622-6981716	SCO Fork Addict RC 15 21 Wty prim kom grn 700C
282622-6989716	SCO Fork Addict RC 15 21 Wty Onyx black 700C
282623-6994716	SCO Fork Addict RC 20 21 Wty Ult mare ble 700C
282624-6519716	SCO Fork Addict RC 30 21 Wty radiu yellow 700C
282624-6973716	SCO Fork Addict RC 30 21 Wty Pris grn prp 700C
282625-6976716	SCO Fork Addict SE D 21 Wty Chamelen grn 700C
282626-6989716	SCO Fork Addict 10 D 21 Wty Onyx black 700C
282626-6994716	SCO Fork Addict 10 D 21 Wty Ult mare ble 700C
282627-0114716	SCO Fork Addict 20 D 21 Wty dark blue 700C
282627-2101716	SCO Fork Addict 20 D 21 Wty pearl white 700C
282628-6995716	SCO Fork Addict 30 D 21 Wty Mat indin rd 700C
282629-6519716	SCO Fork Addict 30 21 Wty radiu yellow 700C
282630-6989716	SCO Fork Metrix 10 21 Wty Onyx black 700C

282631-6990716	SCO Fork Metrix 20 21 Wty Starry blue 700C
282632-6985716	SCO Fork Metrix 30 21 Wty Slate grey 700C
282633-6985716	SCO Fork Speedster 10 D 21 Wty Slate grey 700C
282634-0114716	SCO Fork Speedster 20 D 21 Wty dark blue 700C
282635-0114716	SCO Fork Speedster 10 21 Wty dark blue 700C
282636-2101716	SCO Fork Speedster 20 21 Wty pearl white 700C
282637-0001716	SCO Fork Speedster 30 21 Wty black 700C
282638-0114716	SCO Fork Speedster 40 21 Wty dark blue 700C
282639-0001716	SCO Fork Speedster 50 21 Wty black 700C
282640-6992716	SCO Fork Speedster Gravel 10 21 Wty Pastel beige 700C
282641-6996716	SCO Fork Speedster Gravel 20 21 Wty Mint blue 700C
282642-6997716	SCO Fork Speedster Gravel 30 21 Wty Wakame green 700C
282643-6989716	SCO Fork Speedster Gravel 40 21 Wty Onyx black 700C
282644-2878716	SCO Fork Addict Gravel 10 21 Wty mint green 700C
282645-1561716	SCO Fork Addict Gravel 20 21 Wty pearl grey 700C
282646-6919716	SCO Fork Cont Addict RC 15 21 Wty nitro purple 700C
282647-6910716	SCO Fork Cont Addict 15 D 21 Wty suf spra blu 700C
282648-6039716	SCO Fork Cont Addict 25 D 21 Wty laven purp 700C
282649-6977716	SCO Fork Cont Addict 35 D 21 Wty Clay purple 700C
282650-6910716	SCO Fork Cont Speedster 15 D 21 Wty suf spra blu 700C
282651-6039716	SCO Fork Cont Speedster 15 21 Wty laven purp 700C
282652-6977716	SCO Fork Cont Speedster 25 21 Wty Clay purple 700C
282653-6919716	SCO Fork Cont Addict Gravel 15 21 Wty nitro purple 700C
282654-6980716	SCO Fork Cont Speedster Gravel 15 21 Wty Red cinnabar 700C
282655-3095716	SCO Fork Cont Speedster Gravel 25 21 Wty teal green 700C
282656-6167716	SCO Fork Sub Cross 50 Men 21 Wty dark bronze 700C
282657-2101716	SCO Fork Sub Cross 50 Lady 21 Wty pearl white 700C
282658-6998716	SCO Fork Cont Addict eRIDE 10 21 Wty Prism nitro 700C
282659-6993716	SCO Fork Addict eRIDE PR 21 Wty raw carbon 700C
282660-6973716	SCO Fork Addict eRIDE 10 21 Wty Pris grn prp 700C
282661-6505716	SCO Fork Addict eRIDE 20 21 Wty vogue silver 700C
282701-9999222	SCO Rear shock Spark 100mm Fox EV KSH 21 no color 1size

282702-0001222	SCO Linkage bar Gambler alloy 21 black 1size
282702-6911222	SCO Linkage bar Gambler alloy 21 land green 1size
282702-6974222	SCO Linkage bar Gambler alloy 21 raw all smok 1size
282703-2101222	SCO Linkage bar Gambler Carbon 21 pearl white 1size
282704-2101222	SCO Linkage bar Ransom alloy 21 pearl white 1size
282704-6911222	SCO Linkage bar Ransom alloy 21 land green 1size
282704-6974222	SCO Linkage bar Ransom alloy 21 raw all smok 1size
282704-6984222	SCO Linkage bar Ransom alloy 21 Juniper blue 1size
282706-2879222	SCO Linkage bar Genius alloy 21 rusty red 1size
282706-6911222	SCO Linkage bar Genius alloy 21 land green 1size
282706-6922222	SCO Linkage bar Genius alloy 21 granit black 1size
282706-6974222	SCO Linkage bar Genius alloy 21 raw all smok 1size
282706-6984222	SCO Linkage bar Genius alloy 21 Juniper blue 1size
282706-6986222	SCO Linkage bar Genius alloy 21 Wolf grey 1size
282707-2101222	SCO Linkage bar Genius carbon 21 pearl white 1size
282708-0091222	SCO Linkage bar Spark alloy 100mm 21 dark grey 1size
282708-2101222	SCO Linkage bar Spark alloy 100mm 21 pearl white 1size
282708-6909222	SCO Linkage bar Spark alloy 100mm 21 florida red 1size
282708-6922222	SCO Linkage bar Spark alloy 100mm 21 granit black 1size
282708-6973222	SCO Linkage bar Spark alloy 100mm 21 Pris grn prp 1size
282708-6993222	SCO Linkage bar Spark alloy 100mm 21 raw carbon 1size
282709-6519222	SCO Linkage bar Spark carbon 100mm 21 radiu yellow 1size
282709-6918222	SCO Linkage bar Spark carbon 100mm 21 bla/drift pu 1size
282709-6973222	SCO Linkage bar Spark carbon 100mm 21 Pris grn prp 1size
282710-0091222	SCO Linkage bar Spark alloy 120mm 21 dark grey 1size
282710-0114222	SCO Linkage bar Spark alloy 120mm 21 dark blue 1size
282710-2101222	SCO Linkage bar Spark alloy 120mm 21 pearl white 1size
282710-6753222	SCO Linkage bar Spark alloy 120mm 21 Spectrm gren 1size
282710-6909222	SCO Linkage bar Spark alloy 120mm 21 florida red 1size
282710-6922222	SCO Linkage bar Spark alloy 120mm 21 granit black 1size
282710-6930222	SCO Linkage bar Spark alloy 120mm 21 smith green 1size
282710-6974222	SCO Linkage bar Spark alloy 120mm 21 raw all smok 1size

282710-6978222	SCO Linkage bar Spark alloy 120mm 21 Crystal blak 1size
282710-6988222	SCO Linkage bar Spark alloy 120mm 21 Lazer black 1size
282711-6993222	SCO Linkage bar Spark carbon 120mm 21 raw carbon 1size
282712-9999222	SCO Cableguide kit Plasma 6 21 no color 1size
282713-9999222	SCO Dropout Plasma 6 21 no color 1size
282714-9999222	SCO Dropout Plasma 6 direct mount 21 no color 1size
282715-6973222	SCO Brake mount cover front Plasma 6 21 Pris grn prp 1size
282715-6981222	SCO Brake mount cover front Plasma 6 21 prim kom grn 1size
282716-0025222	SCO Brake mount cover front Addict RC 21 purple 1size
282716-2101222	SCO Brake mount cover front Addict RC 21 pearl white 1size
282716-6519222	SCO Brake mount cover front Addict RC 21 radiu yellow 1size
282716-6973222	SCO Brake mount cover front Addict RC 21 Pris grn prp 1size
282716-6981222	SCO Brake mount cover front Addict RC 21 prim kom grn 1size
282716-6982222	SCO Brake mount cover front Addict RC 21 Pris gry grn 1size
282716-6989222	SCO Brake mount cover front Addict RC 21 Onyx black 1size
282716-6993222	SCO Brake mount cover front Addict RC 21 raw carbon 1size
282716-6994222	SCO Brake mount cover front Addict RC 21 Ult mare ble 1size
282717-9999100	SCO Brake mount rear Plasma 6 20 no color 160
282718-9999222	SCO FD-mount and blank Plasma 6 21 no color 1size
282719-9999222	SCO Hub rep kit SCT-2106 Shim R 21 no color 1size
282720-9999222	SCO Hub rep kit SCT-2105 F 21 no color 1size
282721-9999222	SCO Hub rep kit SCT-2103 F 21 no color 1size
282722-9999222	SCO Hub rep kit SCT-1426 R XDR 21 no color 1size
282723-9999222	SCO Hub rep kit EMSL-148S R M/S 21 no color 1size
282724-9999222	SCO Hub rep kit SCT-2108 R Shim 21 no color 1size
282725-9999222	SCO Hub rep kit CL-3248 R Shim 21 no color 1size
282726-9999222	SCO Hub rep kit CL-148M R M/S 21 no color 1size
282727-9999222	SCO Hub rep kit TD-148M R M/S 21 no color 1size
282728-9999222	SCO eRIDE Mahle Addict inter battery 21 no color 1size
282729-9999222	SCO eRIDE Mahle Addict charger 21 no color 1size
282730-9999222	SCO eRIDE Mahle Addict charge plug EU 21 no color 1size
282731-9999222	SCO eRIDE Mahle Addict charge plug GB 21 no color 1size
282732-9999222	SCO eRIDE Mahle Addict charge plug US 21 no color 1size
282733-9999222	SCO eRIDE Mahle Addict charge port 21 no color 1size
282735-9999222	SCO eRIDE Mahle Addict one remote 21 no color 1size
282736-9999222	SCO eRIDE Mahle Addict hub nut kit 21 no color 1size
282737-9999222	SCO eRIDE Mahle Addict magnet ring 21 no color 1size
282738-9999222	SCO eRIDE Mahle Addict PAS sensor 21 no color 1size
282739-9999222	SCO eRIDE Mahle Addict motor unit EU 21 no color 1size
282740-9999222	SCO eRIDE Mahle Addict motor unit US 21 no color 1size
282741-9999222	SCO eRIDE Mahle Addict freehub 21 no color 1size
282742-9999222	SCO eRIDE Mahle Tool Peak kit connect 21 no color 1size
282743-9999222	SCO eRIDE Mahle Tool GCU kit connect 21 no color 1size
282744-9999222	SCO eRIDE Mahle Tool hub spanner kit 21 no color 1size
282745-9999222	SCO eRIDE Mahle Addict Dropout DM 21 no color 1size
282746-0012222	SCO eRIDE Mahle Addict charge cover 21 silver 1size
282746-6973222	SCO eRIDE Mahle Addict charge cover 21 Pris grn prp 1size
282746-6993222	SCO eRIDE Mahle Addict charge cover 21 raw carbon 1size
282747-9999222	SCO eRIDE Mahle Addict bat/ wire mount 21 no color 1size
282748-9999222	SCO eRIDE Chainstay protector Axis -E 21 no color 1size
282749-9999716	SCO eRIDE Mahle R-Wheel CARB EU 21 Wty no color 700C
282750-9999716	SCO eRIDE Mahle R-Wheel CARB US 21 Wty no color 700C
282751-9999716	SCO eRIDE Mahle R-Wheel ALLOY EU 21 Wty no color 700C
282752-9999716	SCO eRIDE Mahle R-Wheel ALLOY US 21 Wty no color 700C
282753-2436222	SCO eRIDE Bat cover Silence 21 dark brown 1size
282753-3095222	SCO eRIDE Bat cover Silence 21 teal green 1size
282754-2101222	SCO eRIDE linkage Genius 21 pearl white 1size
282754-6522222	SCO eRIDE linkage Genius 21 fire orange 1size
282754-6981222	SCO eRIDE linkage Genius 21 prim kom grn 1size
282754-6984222	SCO eRIDE linkage Genius 21 Juniper blue 1size
282754-6993222	SCO eRIDE linkage Genius 21 raw carbon 1size
282755-0114222	SCO eRIDE linkage Strike 21 dark blue 1size
282755-2101222	SCO eRIDE linkage Strike 21 pearl white 1size
282755-6922222	SCO eRIDE linkage Strike 21 granit black 1size

282755-6974222	SCO eRIDE linkage Strike 21 raw all smok 1size
282755-6982222	SCO eRIDE linkage Strike 21 Pris gry grn 1size
282755-6984222	SCO eRIDE linkage Strike 21 Juniper blue 1size
282755-6993222	SCO eRIDE linkage Strike 21 raw carbon 1size
282756-0001222	SCO eRIDE linkage Ransom 21 black 1size
282756-6911222	SCO eRIDE linkage Ransom 21 land green 1size
282757-0001716	SCO Rim Cross X-17 D 32H 21 black 700C
282758-9999716	SCO Rim SY/Alex Race 24 V 24H 21 no color 700C
282759-9999716	SCO Rim SY/Alex Race 24 V 28H 21 no color 700C
282760-9999193	SCO Rim SY/Alex DP-30 21 no color 24"
282760-9999194	SCO Rim SY/Alex DP-30 21 no color 26"
282761-9999222	SCO Stem spacer kit Crest IC Foil 1" 21 no color 1size
282762-9999222	SCO Seatclamp Plasma 6 21 no color 1size
282814-9999222	SCO eRIDE Mahle Addict exter bat cage 21 no color 1size
283333-6918006	SCO Front triangle Spark RC S-Sonic 21 bla/drift pu S
283333-6918007	SCO Front triangle Spark RC S-Sonic 21 bla/drift pu M
283333-6918008	SCO Front triangle Spark RC S-Sonic 21 bla/drift pu L
283333-6918009	SCO Front triangle Spark RC S-Sonic 21 bla/drift pu XL
283335-6918222	SCO Swingarm Spark RC S-Sonic 21 bla/drift pu 1size
283336-6980019	SCO Frameset Cont Speed Gra 15 21 Wty Red cinnabar XXS47
283336-6980020	SCO Frameset Cont Speed Gra 15 21 Wty Red cinnabar XS49
283336-6980021	SCO Frameset Cont Speed Gra 15 21 Wty Red cinnabar S52
283336-6980022	SCO Frameset Cont Speed Gra 15 21 Wty Red cinnabar M54
283336-6980023	SCO Frameset Cont Speed Gra 15 21 Wty Red cinnabar L56
283338-9999222	SCO Service Cart R/S RLC3 Scott SID 21 no color 1size
283339-9999222	SCO Service Cart R/S RL3 Scott SID 21 no color 1size
283340-9999222	SCO Axle Foil/Addict/Speedster D R 21 no color 1size
283341-9999222	SCO Axle Foil/Addict/Speedster D F 21 no color 1size
283342-9999222	SCO Spoke SY/Form rep kit Cap X40e R no color 1size
283343-9999222	SCO Spoke SY/Form rep kit Cap X40e F no color 1size
283344-9999222	SCO Spoke SY/Form rep kit Cap X25e R no color 1size
283345-9999222	SCO Spoke SY/Form rep kit Cap X25e F no color 1size
283346-9999222	SCO eRIDE Mahle Addict FD mount 21 no color 1size
283347-0001222	SCO eRIDE Bat cover Sub UNI 21 black 1size
283348-0001222	SCO eRIDE Motor Cov Gen3 Sub UNI 21 black 1size
283349-0001222	SCO eRIDE Motor Cov Gen4 Sub UNI 21 black 1size
283350-0001716	SCO Rim SY Capital 1.0 X40e 24H 21 black 700C
283351-0001716	SCO Rim SY Capital 1.0 X40e 32H 21 black 700C
283352-0001716	SCO Rim SY Capital 2.0 X25e 28H 21 black 700C
283353-0001716	SCO Rim SY Capital 2.0 X25e 32H 21 black 700C
283354-2101365	SCO Bar SY Hixon iC 1.0 rise Wty 21 pearl white 40mm
283354-2101366	SCO Bar SY Hixon iC 1.0 rise Wty 21 pearl white 50mm
283355-2101368	SCO Bar SY Hixon IC SL Wty 21 pearl white 90mm
283355-2101375	SCO Bar SY Hixon IC SL Wty 21 pearl white 80mm
283355-2101380	SCO Bar SY Hixon IC SL Wty 21 pearl white 60mm
283355-2101911	SCO Bar SY Hixon IC SL Wty 21 pearl white 70mm
283356-0025368	SCO Bar SY Fraser IC SL Wty 21 purple 90mm
283356-0025375	SCO Bar SY Fraser IC SL Wty 21 purple 80mm
283356-0025380	SCO Bar SY Fraser IC SL Wty 21 purple 60mm
283356-0025911	SCO Bar SY Fraser IC SL Wty 21 purple 70mm
283356-6519368	SCO Bar SY Fraser IC SL Wty 21 radiu yellow 90mm
283356-6519375	SCO Bar SY Fraser IC SL Wty 21 radiu yellow 80mm
283356-6519380	SCO Bar SY Fraser IC SL Wty 21 radiu yellow 60mm
283356-6519911	SCO Bar SY Fraser IC SL Wty 21 radiu yellow 70mm
283357-9999222	SCO Stem steerer cap Crest IC Foil 1" 21 no color 1size
283358-6918222	SCO Brake S-sonic Sram level ULT 21 Wty bla/drift pu 1size
283359-9999222	SCO Seatpost Remote Syncros I-Spec 2 21 no color 1size
283360-0001896	SCO Crankset S-sonic Sram XX1 21 Wty black 170
283360-0001898	SCO Crankset S-sonic Sram XX1 21 Wty black 175
283361-0001857	SCO Crankset Prowheel Ran F-Pro 32T 21 black 140mm
283361-0001939	SCO Crankset Prowheel Ran F-Pro 32T 21 black 127
283362-0001857	SCO Crankset Prowheel Sca F-pro 32T 21 black 140mm
283362-0001858	SCO Crankset Prowheel Sca F-pro 32T 21 black 152mm
283362-0001939	SCO Crankset Prowheel Sca F-pro 32T 21 black 127

283365-6974222	SCO Frame Voltage YZ 0.1 21 Wty raw all smok 1size
285497-9999222	SCO eRIDE Swingarm Rep kit Ransom 21 no color 1size
285498-0001222	SCO eRIDE Fender Axis 10/20 21 Wty black 1size
285786-0001006	SCO Front triangle Spark 940 21 black S
285786-0001007	SCO Front triangle Spark 940 21 black M
285786-0001008	SCO Front triangle Spark 940 21 black L
285786-0001009	SCO Front triangle Spark 940 21 black XL
285787-6919006	SCO Front triangle Cont Ransom 910 21 nitro purple S
285787-6919007	SCO Front triangle Cont Ransom 910 21 nitro purple M
285787-6919008	SCO Front triangle Cont Ransom 910 21 nitro purple L
285788-6039879	SCO Frame Cont Active 40 21 Wty laven purp S7
285788-6039881	SCO Frame Cont Active 40 21 Wty laven purp M9
285788-6039882	SCO Frame Cont Active 40 21 Wty laven purp L9
285788-6039888	SCO Frame Cont Active 40 21 Wty laven purp XS7
285789-0006006	SCO Frame Spark 600 F-Pro 21 Wty green S
285790-6519005	SCO Frame Spark 700 F-Pro 21 Wty radiu yellow XS
285790-6519006	SCO Frame Spark 700 F-Pro 21 Wty radiu yellow S
285791-6919222	SCO Chainstays Cont Ransom 910 21 nitro purple 1size
285792-6919222	SCO Seatstays Cont Ransom 910 21 nitro purple 1size
285793-0001222	SCO Swingarm Spark 940 21 black 1size
285794-2101019	SCO Frameset Addict RC 10D 21 Wty pearl white XXS47
285794-2101020	SCO Frameset Addict RC 10D 21 Wty pearl white XS49
285794-2101021	SCO Frameset Addict RC 10D 21 Wty pearl white S52
285794-2101022	SCO Frameset Addict RC 10D 21 Wty pearl white M54
285794-2101023	SCO Frameset Addict RC 10D 21 Wty pearl white L56
285794-2101024	SCO Frameset Addict RC 10D 21 Wty pearl white XL58
285794-2101025	SCO Frameset Addict RC 10D 21 Wty pearl white 2XL61
285795-6910019	SCO Frameset Cont Speedster 15 D 21 Wty suf spra blu XXS47
285795-6910020	SCO Frameset Cont Speedster 15 D 21 Wty suf spra blu XS49
285795-6910021	SCO Frameset Cont Speedster 15 D 21 Wty suf spra blu S52
285795-6910022	SCO Frameset Cont Speedster 15 D 21 Wty suf spra blu M54
285795-6910023	SCO Frameset Cont Speedster 15 D 21 Wty suf spra blu L56
285796-4712006	SCO Frame Silence eRIDE Evo 45KM 21 Wty tangeri oran S
285796-4712007	SCO Frame Silence eRIDE Evo 45KM 21 Wty tangeri oran M
285796-4712008	SCO Frame Silence eRIDE Evo 45KM 21 Wty tangeri oran L
285796-4712009	SCO Frame Silence eRIDE Evo 45KM 21 Wty tangeri oran XL
285797-0012006	SCO Frame Silence eRIDE 10 Men 45KM 21 silver S
285797-0012007	SCO Frame Silence eRIDE 10 Men 45KM 21 silver M
285797-0012008	SCO Frame Silence eRIDE 10 Men 45KM 21 silver L
285797-0012009	SCO Frame Silence eRIDE 10 Men 45KM 21 silver XL
285798-5800006	SCO Frame Silence eRIDE 10 Lady 45KM 21 petrol blue S
285798-5800007	SCO Frame Silence eRIDE 10 Lady 45KM 21 petrol blue M
285798-5800008	SCO Frame Silence eRIDE 10 Lady 45KM 21 petrol blue L
285799-6757006	SCO Frame Silence eRIDE 20 Men 45KM 21 sparkle blac S
285799-6757007	SCO Frame Silence eRIDE 20 Men 45KM 21 sparkle blac M
285799-6757008	SCO Frame Silence eRIDE 20 Men 45KM 21 sparkle blac L
285799-6757009	SCO Frame Silence eRIDE 20 Men 45KM 21 sparkle blac XL
285800-6757006	SCO Frame Silence eRIDE 20 Lady 45KM 21 sparkle blac S
285800-6757007	SCO Frame Silence eRIDE 20 Lady 45KM 21 sparkle blac M
285800-6757008	SCO Frame Silence eRIDE 20 Lady 45KM 21 sparkle blac L
285801-0086006	SCO Frame Sub Tour eRIDE 10 Lady 21 Wty dark green S
285801-0086007	SCO Frame Sub Tour eRIDE 10 Lady 21 Wty dark green M
285801-0086008	SCO Frame Sub Tour eRIDE 10 Lady 21 Wty dark green L
285802-0086006	SCO Frame Sub Tour eRIDE 10 Men 21 Wty dark green S
285802-0086007	SCO Frame Sub Tour eRIDE 10 Men 21 Wty dark green M
285802-0086008	SCO Frame Sub Tour eRIDE 10 Men 21 Wty dark green L
285802-0086009	SCO Frame Sub Tour eRIDE 10 Men 21 Wty dark green XL
285803-0086006	SCO Frame Sub Sport 40 Lady 21 Wty dark green S
285803-0086007	SCO Frame Sub Sport 40 Lady 21 Wty dark green M
285803-0086008	SCO Frame Sub Sport 40 Lady 21 Wty dark green L
285804-6519194	SCO Frame Scale 26 D JR 21 Wty radiu yellow 26"
285805-0005193	SCO Frame Scale 24 D JR 21 Wty yellow 24"
285806-4712006	SCO Fork Silence eRIDE Evo 45KM 21 tangeri oran S
285806-4712007	SCO Fork Silence eRIDE Evo 45KM 21 tangeri oran M

285806-4712008	SCO Fork Silence eRIDE Evo 45KM 21 tangeri oran L
285807-6353192	SCO Fork Scale RC 200 Future Pro 21 Wty pale grey 20"
285808-2101195	SCO Fork Addict RC 40 21 Wty pearl white 700C
285809-0001195	SCO Fork Suntour SF19-NEX Sub eRIDE 21 W black 700C
285810-9999222	SCO Rear shock Ran eRIDE Fox X2 21 Wty no color 1size
285811-9999222	SCO Rear shock Ran F-Pro X-Fusion 21 Wty no color 1size
285812-9999222	SCO Shock mount bolt kit Ran F-Pro 21 no color 1size
285813-0001222	SCO Axle Rear UDH 12x148mm 21 black 1size
285814-0001222	SCO Swingarm rep kit Ransom F-Pro 21 black 1size
285815-9999222	SCO Hub rep kit DC-3248 R SH 21 no color 1size
285816-0001193	SCO Front wheel Ransom F-Pro 21 Wty black 24"
285816-0001194	SCO Front wheel Ransom F-Pro 21 Wty black 26"
285817-0001193	SCO Rear wheel Ransom F-Pro 21 Wty black 24"
285817-0001194	SCO Rear wheel Ransom F-Pro 21 Wty black 26"
285818-2101222	SCO eRIDE Motor cov Gen/strike carbon 21 pearl white 1size
285818-6982222	SCO eRIDE Motor cov Gen/strike carbon 21 Pris gry grn 1size
285818-6993222	SCO eRIDE Motor cov Gen/strike carbon 21 raw carbon 1size
285819-0001222	SCO eRIDE Carrier Silence 30 21 Wty black 1size
285820-0001222	SCO eRIDE Carrier Sub USX 21 Wty black 1size
285821-0001222	SCO eRIDE Handlebars Silence 21 Wty black 1size
285822-0001368	SCO eRIDE Stem Silence 21 Wty black 90mm
285822-0001380	SCO eRIDE Stem Silence 21 Wty black 60mm
285823-9999222	SCO Headset Foil 21 no color 1size
285922-0005006	SCO Frame Scale 930 21 Wty yellow S
285922-0005007	SCO Frame Scale 930 21 Wty yellow M
285922-0005008	SCO Frame Scale 930 21 Wty yellow L
285922-0005009	SCO Frame Scale 930 21 Wty yellow XL
285923-0025222	SCO Fork Spark RC S-sonic lowers 21 Wty purple 1size
285924-9999715	SCO Wheelset Gambler 920 21 Wty no color 29"
285925-0001193	SCO Rim Alex C-1000 32H 24" 21 black 24"
286000-9999222	SCO Dropout Sram UDH 21 no color 1size
286001-0001222	SCO Chainstay protector kit Ran F-Pro 21 black 1size
286002-0001222	SCO eRIDE ChainGuard Sub USX 21 black 1size
286003-2101366	SCO Bar SY Hixon DH Wty 21 pearl white 50mm
286722-9999222	SCO Hub rep kit DHL-93 F 21 no color 1size
282709-0004222	SCO Linkage bar Spark carbon 100mm 21 red 1 size
287407-9999222	SCO eRIDE Kickstand foot Silence 21 Wty no color 1 size

TWINLOC/RIDELOC



Model	Fork spec	Shock spec	Scott part number	Cam colour/type	Lever position	with dust cover
SCALE RC 900						
SCO Bike Scale RC 900 World Cup AXS	3P / 0 - 7-14mm	N/A	272449	Fox-CTD-B	Integrated - Bottom	Yes
SCO Bike Scale RC 900 World Cup	3P / 0 - 7-14mm	N/A	272449	Fox-CTD-B	Integrated - Bottom	Yes
SCO Bike Scale RC 900 Team Issue AXS	2P / 0 - 10mm	N/A	272449	2 stage 10mm	Integrated - Bottom	Yes
SCO Bike Scale RC 900 Team	2P / 0 - 10mm	N/A	272449	2 stage 10mm	Integrated - Bottom	Yes
SCALE 900						
SCO Bike Scale 910 AXS	3P / 0 - 7-14mm	N/A	272449	Fox-CTD-B	Integrated - Bottom	Yes
SCO Bike Scale 920	3P / 0 - 7-14mm	N/A	272449	Fox-CTD-B	Integrated - Bottom	Yes
SCO Bike Scale 925	3P / 0 - 7-14mm	N/A	272449	Fox-CTD-B	Integrated - Bottom	Yes
SCO Bike Scale 930	3P / 0 - 7-14mm	N/A	272449	Fox-CTD-B	Integrated - Bottom	Yes
SCO Bike Scale 940	2P / 0 - 17mm	N/A	272449	2 Stage 17mm	Integrated - Bottom	Yes
SCO Bike Scale 950	3P / 0 - 7-14mm	N/A	272449	Fox-CTD-B	Integrated - Bottom	Yes
SCO Bike Scale 960	2P / 0 - 17mm	N/A	239172	2 Stage 17mm	Standard - Top	No
SCO Bike Scale 965	2P / 0 - 17mm	N/A	239172	2 Stage 17mm	Standard - Top	No
SCO Bike Scale 970	2P / 0 - 17mm	N/A	239172	2 Stage 17mm	Standard - Top	No
SPARK RC 900						
SCO Bike Spark RC 900 SL AXS	3P / 0 - 7-14mm	3P / 0 - 7-14.3mm	272451	Blue cam	Integrated - Bottom	No
SCO Bike Spark RC 900 World Cup AXS	3P / 0 - 7-14mm	3P / 0 - 7-14.3mm	272451	Blue cam	Integrated - Bottom	No
SCO Bike Spark RC 900 World Cup	3P / 0 - 7-14mm	3P / 0 - 7-14.3mm	272451	Blue cam	Integrated - Bottom	No
SCO Bike Spark RC 900 Pro	3P / 0 - 7-14mm	3P / 0 - 7-14.3mm	272451	Blue cam	Integrated - Bottom	No
SCO Bike Spark RC 900 Team Issue AXS	3P / 0 - 7-14mm	3P / 0 - 7-14.3mm	272451	Blue cam	Integrated - Bottom	No
SCO Bike Spark RC 900 Team	3P / 0 - 7-14mm	3P / 0 - 7-14.3mm	272451	Blue cam	Integrated - Bottom	No
SCO Bike Spark RC 900 Comp	3P / 0 - 7-14mm	3P / 0 - 7-14.3mm	272451	Blue cam	Integrated - Bottom	No
SPARK 900						
SCO Bike Spark 900 Ultimate AXS	3P / 0 - 7-14mm	3P / 0 - 7-14.3mm	272450	Gold cam	Integrated - Bottom	No
SCO Bike Spark 900 AXS	3P / 0 - 7-14mm	3P / 0 - 7-14.3mm	272450	Gold cam	Integrated - Bottom	No
SCO Bike Spark 910	3P / 0 - 7-14mm	3P / 0 - 7-14.3mm	272450	Gold cam	Integrated - Bottom	No
SCO Bike Spark 920	3P / 0 - 7-14mm	3P / 0 - 7-14.3mm	272450	Gold cam	Integrated - Bottom	No
SCO Bike Spark 930	3P / 0 - 7-14mm	3P / 0 - 7-14.3mm	272450	Gold cam	Integrated - Bottom	No

Model	Fork spec	Shock spec	Scott part number	Cam colour/type	Lever position	with dust cover
SCO Bike Spark 940	3P / 0 - 7-14mm	3P / 0 - 7-14.3mm	272450	Gold cam	Integrated - Bottom	No
SCO Bike Spark 950	3P / 0 - 7-14mm	3P / 0 - 7-14.3mm	272450	Gold cam	Integrated - Bottom	No
SCO Bike Spark 960	2P / 0 - 17mm	3P / 0 - 7-14.3mm	272450	Gold cam	Integrated - Bottom	No
SCO Bike Spark 970	2P / 0 - 17mm	3P / 0 - 7-14.3mm	272450	Gold cam	Integrated - Bottom	No
GENIUS 900						
SCO Bike Genius 900 Tuned AXS	3P / 0 - 7-14mm	3P / 0 - 7-14.3mm	272450	Gold cam	Integrated - Bottom	No
SCO Bike Genius 910 AXS	3P / 0 - 7-14mm	3P / 0 - 7-14.3mm	272450	Gold cam	Integrated - Bottom	No
SCO Bike Genius 920	3P / 0 - 7-14mm	3P / 0 - 7-14.3mm	272450	Gold cam	Integrated - Bottom	No
SCO Bike Genius 930	3P / 0 - 7-14mm	3P / 0 - 7-14.3mm	272450	Gold cam	Integrated - Bottom	No
SCO Bike Genius 940	3P / 0 - 7-14mm	3P / 0 - 7-14.3mm	272450	Gold cam	Integrated - Bottom	No
SCO Bike Genius 950	3P / 0 - 7-14mm	3P / 0 - 7-14.3mm	272450	Gold cam	Integrated - Bottom	No
SCO Bike Genius 960	3P / 0 - 7-14mm	3P / 0 - 7-14.3mm	272450	Gold cam	Integrated - Bottom	No
RANSOM 900						
SCO Bike Ransom 900 Tuned AXS	3P / 0 - 7-14mm	3P / 0 - 7-14.3mm	272450	Gold cam	Integrated - Bottom	No
SCO Bike Ransom 910	3P / 0 - 7-14mm	3P / 0 - 7-14.3mm	272450	Gold cam	Integrated - Bottom	No
SCO Bike Ransom 920	3P / 0 - 7-14mm	3P / 0 - 7-14.3mm	272450	Gold cam	Integrated - Bottom	No
SCO Bike Ransom 930	N/A	3P / 0 - 7-14.3mm	272450	*Remove cam	Integrated - Bottom	No
ASPECT 900						
SCO Bike Aspect 910	2P / 0 - 17mm	N/A	239172	2 Stage 17mm	Standard - Top	No
CONTESSA SCALE						
SCO Bike Contessa Scale 910	3P / 0 - 7-14mm	N/A	272449	Fox-CTD-B	Integrated - Bottom	Yes
SCO Bike Contessa Scale 920	3P / 0 - 7-14mm	N/A	272449	Fox-CTD-B	Integrated - Bottom	Yes
SCO Bike Contessa Scale 930	2P / 0 - 17mm	N/A	272449	2 Stage 17mm	Integrated - Bottom	Yes
SCO Bike Contessa Scale 940	2P / 0 - 17mm	N/A	239172	2 Stage 17mm	Standard - Top	No
SCO Bike Contessa Scale 950	2P / 0 - 17mm	N/A	239172	2 Stage 17mm	Standard - Top	No
CONTESSA SPARK 900						
SCO Bike Contessa Spark RC 900 WC	3P / 0 - 7-14mm	3P / 0 - 7-14.3mm	272451	Blue cam	Integrated - Bottom	No
SCO Bike Contessa Spark RC 900 Comp	3P / 0 - 7-14mm	3P / 0 - 7-14.3mm	272451	Blue cam	Integrated - Bottom	No
SCO Bike Contessa Spark 910	3P / 0 - 7-14mm	3P / 0 - 7-14.3mm	272450	Gold cam	Integrated - Bottom	No
SCO Bike Contessa Spark 920	3P / 0 - 7-14mm	3P / 0 - 7-14.3mm	272450	Gold cam	Integrated - Bottom	No
SCO Bike Contessa Spark 930	2P / 0 - 17mm	3P / 0 - 7-14.3mm	272450	Gold cam	Integrated - Bottom	No

Model	Fork spec	Shock spec	Scott part number	Cam colour/type	Lever position	with dust cover
CONTESSA GENIUS						
SCO Bike Contessa Genius 910 (TW)	3P / 0 - 7-14mm	3P / 0 - 7-14.3mm	272450	Gold cam	Integrated - Bottom	No
SCO Bike Contessa Genius 920 (TW)	3P / 0 - 7-14mm	3P / 0 - 7-14.3mm	272450	Gold cam	Integrated - Bottom	No
CONTESSA RANSOM						
SCO Bike Contessa Ransom 910	3P / 0 - 7-14mm	3P / 0 - 7-14.3mm	272450	Gold cam	Integrated - Bottom	No
GENIUS eRide 900						
SCO Bike Genius eRIDE 900 Tuned	3P / 0 - 7-14mm	3P / 0 - 7-14.3mm	272451	Blue cam	Integrated - Bottom	No
SCO Bike Genius eRIDE 900	2P / 0 - 10mm	3P / 0 - 7-14.3mm	272451	Gold cam	Integrated - Bottom	No
SCO Bike Genius eRIDE 910	3P / 0 - 7-14mm	3P / 0 - 7-14.3mm	272451	Blue cam	Integrated - Bottom	No
SCO Bike Genius eRIDE 920	3P / 0 - 7-14mm	3P / 0 - 7-14.3mm	272451	Blue cam	Integrated - Bottom	No
SCO Bike Genius eRIDE 930	2P / 0 - 10mm	3P / 0 - 7-14.3mm	272451	Gold cam	Integrated - Bottom	No
STRIKE eRide 900						
SCO Bike Strike eRIDE 900 Premium	3P / 0 - 7-14mm	3P / 0 - 7-14.3mm	272451	Blue cam	Integrated - Bottom	No
SCO Bike Strike eRIDE 900	3P / 0 - 7-14mm	3P / 0 - 7-14.3mm	272451	Blue cam	Integrated - Bottom	No
SCO Bike Strike eRIDE 910	3P / 0 - 7-14mm	3P / 0 - 7-14.3mm	272451	Blue cam	Integrated - Bottom	No
SCO Bike Strike eRIDE 920	3P / 0 - 7-14mm	3P / 0 - 7-14.3mm	272451	Blue cam	Integrated - Bottom	No
SCO Bike Strike eRIDE 930	3P / 0 - 7-14mm	3P / 0 - 7-14.3mm	272451	Blue cam	Integrated - Bottom	No
SCO Bike Strike eRIDE 940	3P / 0 - 7-14mm	3P / 0 - 7-14.3mm	272451	Blue cam	Integrated - Bottom	No
CONTESSA eRide						
SCO Bike Contessa Strike eRIDE 920	3P / 0 - 7-14mm	3P / 0 - 7-14.3mm	272451	Blue cam	Integrated - Bottom	No
SCO Bike Contessa Genius eRIDE 910	3P / 0 - 7-14mm	3P / 0 - 7-14.3mm	272451	Blue cam	Integrated - Bottom	No
SCO Bike Contessa Strike eRIDE 910	3P / 0 - 7-14mm	3P / 0 - 7-14.3mm	272451	Blue cam	Integrated - Bottom	No
SCO Bike Contessa Strike eRIDE 920	3P / 0 - 7-14mm	3P / 0 - 7-14.3mm	272451	Blue cam	Integrated - Bottom	No
AXIS eRide						
SCO Bike Axis eRIDE Evo Speed	2P / 0 - 17mm	3P / 0 - 7-14.3mm	272451	Gold cam	Integrated - Bottom	No
SCO Bike Axis eRIDE Evo	2P / 0 - 17mm	3P / 0 - 7-14.3mm	272451	Gold cam	Integrated - Bottom	No
FUTURE PRO						
SCO Bike Spark 700	3P / 0 - 7-14mm	3P / 0 - 7-14.3mm	272450	Gold cam	Integrated - Bottom	No
SCO Bike Scale 710 (CN)	2P / 0 - 17mm	N/A	239172	2 Stage 17mm	Standard - Top	No

REPLACEABLE DROP OUTS & CABLE GUIDES

Model	Fitted hanger	Alternative hangers	Rear Axle	Front Axle	FD Mount	Chainguide
SCALE RC 900						
SCO Bike Scale RC 900 World Cup AXS	254090	254091	277033			254098/254099
SCO Bike Scale RC 900 World Cup	254090	254091	277033			254098/254099
SCO Bike Scale RC 900 Team Issue AXS	254090	254091	277033			254098/254099
SCO Bike Scale RC 900 Team	254090	254091	277033			254098/254099
SCALE 900						
SCO Bike Scale 910 AXS	254090	254091	277033		254088	254098/254099
SCO Bike Scale 920	254090	254091	277033		254088	254098/254099
SCO Bike Scale 925	254090	254091	277033		254088	254098/254099
SCO Bike Scale 930 yellow	254090	254091	277033		254088	254098/254099
SCO Bike Scale 930 wakame green	254090	254091	277033		254088	254098/254099
SCO Bike Scale 940 red	254090	254091	277033		254088	254098/254099
SCO Bike Scale 940 granite black	254090	254091	277033		254088	254098/254099
SCO Bike Scale 950	254092	254093	277033			
SCO Bike Scale 960	254092	254093	277033			
SCO Bike Scale 965	254092	254093	277033			
SCO Bike Scale 970 red	273561		274235			
SCO Bike Scale 970 dark grey	273561		274235			
SCO Bike Scale 980 yellow	273561		274235			
SCO Bike Scale 980 dark grey	273561		274235			
SPARK RC 900						
SCO Bike Spark RC 900 SL AXS	254090	254091	277032			254100
SCO Bike Spark RC 900 World Cup AXS	254090	254091	277032			254100
SCO Bike Spark RC 900 World Cup	254090	254091	277032			254100
SCO Bike Spark RC 900 Pro	254090	254091	277032			254100
SCO Bike Spark RC 900 Team Issue AXS prism	254090	254091	277032			254100
SCO Bike Spark RC 900 Team Issue AXS carbon	254090	254091	277032			254100
SCO Bike Spark RC 900 Team	254090	254091	277032			254100
SCO Bike Spark RC 900 Comp red	254090	254091	277032			254100
SCO Bike Spark RC 900 Comp drk grey	254090	254091	277032			254100
SPARK 900						
SCO Bike Spark 900 Ultimate AXS	254090	254091	277032		254087	254101
SCO Bike Spark 900 AXS	254092	254093	277032		254087	254101
SCO Bike Spark 910	254092	254093	277032		254087	254101
SCO Bike Spark 920	254092	254093	277032		254087	254101
SCO Bike Spark 930	254092	254093	277032		254087	254101
SCO Bike Spark 940	254092	254093	277032		254087	254101
SCO Bike Spark 950	254092	254093	277032		254087	254101
SCO Bike Spark 960 red	254092	254093	277032		254087	254101
SCO Bike Spark 960 dark grey	254092	254093	277032		254087	254101

Model	Fitted hanger	Alternative hangers	Rear Axle	Front Axle	FD Mount	Chainguide
SCO Bike Spark 970 smith green	254094		274235		254087	254101
SCO Bike Spark 970 granite black	254094		274235		254087	254101
GENIUS 900						
SCO Bike Genius 900 Tuned AXS	254090	254091	277032			268473
SCO Bike Genius 910 AXS	254092	254093	277032		254087	268473
SCO Bike Genius 920	254092	254093	277032		254087	268473
SCO Bike Genius 930	254092	254093	277032		254087	268473
SCO Bike Genius 940	254092	254093	277032		254087	268473
SCO Bike Genius 950	254092	254093	277032		254087	268473
SCO Bike Genius 960	254092	254093	277032		254087	268473
RANSOM 900						
SCO Bike Ransom 900 Tuned AXS	254090	254091	277032			271240
SCO Bike Ransom 910	254092	254093	277032			271240
SCO Bike Ransom 920	254092	254093	277032			271240
SCO Bike Ransom 930	254092	254093	277032			271240
PROGRESSIVE						
SCO Bike Gambler 900 Tuned	276482		276481			275502
SCO Bike Gambler 910	276482		276481			275502
SCO Bike Gambler 920	276482		276481			275502
SCO Bike Gambler 930	276482		276481			275502
SCO Bike Voltage YZ 0.1	215998					
ASPECT						
SCO Bike Aspect 910	273561		274235			
SCO Bike Aspect 920	273561		274235			
SCO Bike Aspect 930 pearl white	273561					
SCO Bike Aspect 930 stellar blue	273561					
SCO Bike Aspect 940 granite	273561					
SCO Bike Aspect 940 orange	273561					
SCO Bike Aspect 950 slate grey	273561					
SCO Bike Aspect 950 smith green	273561					
SCO Bike Aspect 960 dark grey	273561					
SCO Bike Aspect 960 red	273561					
SCO Bike Aspect 970 stellar blue	273561					
SCO Bike Aspect 970 yellow	273561					
SCO Bike Aspect 740 granite	273561					
SCO Bike Aspect 740 orange	273561					
SCO Bike Aspect 750 slate grey	273561					
SCO Bike Aspect 750 smith green	273561					
SCO Bike Aspect 760 dark grey	273561					

Model	Fitted hanger	Alternative hangers	Rear Axle	Front Axle	FD Mount	Chainguide
PLASMA						
SCO Bike Plasma Premium	282713	282714	277029	277028	282718	
SCO Bike Plasma RC	282714	282713	277029	277028	282718	
FOIL						
SCO Bike Foil Pro	264483	239530	283340	283341		
SCO Bike Foil 10	239530	264483	283340	283341		
SCO Bike Foil 20	264483	239530	283340	283341		
SCO Bike Foil 30	264483	239530	283340	283341		
ADDICT RC						
SCO Bike Addict RC Ultimate	277544	277545	277029	277028		
SCO Bike Addict RC Pro	277545	277544	277029	277028		
SCO Bike Addict RC 10 pr.grey grn	277544	277545	277030	277031		
SCO Bike Addict RC 10 pearl white	277544	277545	277030	277031		
SCO Bike Addict RC 15 carb. onyx blk	277545	277544	277030	277031		
SCO Bike Addict RC 15 pr.kom.green	277545	277544	277030	277031		
SCO Bike Addict RC 20	277544	277545	277030	277031		
SCO Bike Addict RC 30 pr.grn purple	277545	277544	277030	277031		
SCO Bike Addict RC 30 yellow	277545	277544	277030	277031		
SCO Bike Addict RC 40	277545	277544	277030	277031		
ADDICT						
SCO Bike Addict SE disc	239530	264483	283340	283341		
SCO Bike Addict 10 disc carb. oyx.blk TW	239530	264483	283340	283341		
SCO Bike Addict 10 disc marine blue	239530	264483	283340	283341		
SCO Bike Addict 20 disc stellar blue TW	239530	264483	283340	283341		
SCO Bike Addict 20 disc pearl white	239530	264483	283340	283341		
SCO Bike Addict 30 disc	239530	264483	283340	283341		
SCO Bike Addict 30	235286	273417				
SPEEDSTER						
SCO Bike Speedster 10 disc	264483	239530	283340	283341		
SCO Bike Speedster 10	266778					
SCO Bike Speedster 20 disc	239530	264483	283340	283341		
SCO Bike Speedster 20	266778					
SCO Bike Speedster 30	266778					
SCO Bike Speedster 40	266778					
SCO Bike Speedster 50	266778					
METRIX						
SCO Bike Metrix 10	239530	264483	283340	283341		
SCO Bike Metrix 20	239530	264483	283340	283341		
SCO Bike Metrix 30 EQ	266778					
GRAVEL						
SCO Bike Addict Gravel 10	239530	264483	283340	283341		242435
SCO Bike Addict Gravel 20	264483	239530	283340	283341		242435

Model	Fitted hanger	Alternative hangers	Rear Axle	Front Axle	FD Mount	Chainguide
SCO Bike Speedster Gravel 10	239530	264483	283340	283341		
SCO Bike Speedster Gravel 20	239530	264483	283340	283341		
SCO Bike Speedster Gravel 30	239530	264483	283340	283341		
SCO Bike Speedster Gravel 40	239530	264483	283340	283341		
CYCLOCROSS						
SCO Bike Addict CX RC	264483	239530	283340	283341		242435
CONTESSA SCALE 900						
SCO Bike Contessa Scale 910	254090	254091	277033		254088	254098/254099
SCO Bike Contessa Scale 920	254090	254091	277033		254088	254098/254099
SCO Bike Contessa Scale 930	254090	254091	277033		254088	254098/254099
SCO Bike Contessa Scale 940	254092	254093	277033			
SCO Bike Contessa Scale 950	254092	254093	277033			
CONTESSA SPARK 900						
SCO Bike Contessa Spark RC 900 WC	254090	254091	277032			254100
SCO Bike Contessa Spark RC 900 Comp	254090	254091	277032			254100
SCO Bike Contessa Spark 910	254092	254093	277032		254087	254101
SCO Bike Contessa Spark 920	254092	254093	277032		254087	254101
SCO Bike Contessa Spark 930	254092	254093	277032		254087	254101
CONTESSA GENIUS 900						
SCO Bike Contessa Genius 910	254092	254093	277032		254087	268473
SCO Bike Contessa Genius 920	254092	254093	277032		254087	268473
CONTESSA RANSOM						
SCO Bike Contessa Ransom 910	254092	254093	277032			271240
CONTESSA ACTIVE						
SCO Bike Contessa Active 10	273561		274235			
SCO Bike Contessa Active 20	273561					
SCO Bike Contessa Active 30	273561					
SCO Bike Contessa Active 40 purple	273561					
SCO Bike Contessa Active 40 blue	273561					
SCO Bike Contessa Active 50 brick red	273561					
SCO Bike Contessa Active 50 teal grn	273561					
SCO Bike Contessa Active 60	273561					
CONTESSA ROAD						
SCO Bike Contessa Addict RC 15	277545	277544	277030	277031		
SCO Bike Contessa Addict 15 disc	239530	264483	283340	283341		
SCO Bike Contessa Addict 25 disc	239530	264483	283340	283341		
SCO Bike Contessa Addict 35 disc	239530	264483	283340	283341		
SCO Bike Contessa Speedster 15 disc	264483	239530	283340	283341		
SCO Bike Contessa Speedster 15	266778					
SCO Bike Contessa Speedster 25	266778					

Model	Fitted hanger	Alternative hangers	Rear Axle	Front Axle	FD Mount	Chainguide
CONTESSA GRAVEL						
SCO Bike Contessa Addict Gravel 15	264483	239530	283340	283341		242435
SCO Bike Contessa Speedster Gravel 15	239530	264483	283340	283341		
SCO Bike Contessa Speedster Gravel 25	239530	264483	283340	283341		
RANSOM eRIDE						
SCO Bike Ransom eRIDE 910	254092	254093	277032			
SCO Bike Ransom eRIDE 920	254092	254093	277032			
GENIUS eRIDE Europe						
SCO Bike Genius eRIDE 900 Tuned	254092	254093	277032			266602
SCO Bike Genius eRIDE 900	254092	254093	277032			266602
SCO Bike Genius eRIDE 910	254092	254093	277032			266602
SCO Bike Genius eRIDE 920	254092	254093	277032			266602
SCO Bike Genius eRIDE 930	254092	254093	277032			266602
STRIKE eRIDE						
SCO Bike Strike eRIDE 900 Premium	254092	254093	277032			266602
SCO Bike Strike eRIDE 900	254092	254093	277032			266602
SCO Bike Strike eRIDE 910	254092	254093	277032			266602
SCO Bike Strike eRIDE 920	254092	254093	277032			266602
SCO Bike Strike eRIDE 930 black	254092	254093	277032			266602
SCO Bike Strike eRIDE 930 blue	254092	254093	277032			266602
SCO Bike Strike eRIDE 940	254092	254093	277032			266602
ASPECT eRIDE						
SCO Bike Aspect eRIDE 910	254092	254093	277033			
SCO Bike Aspect eRIDE 920 black	254092	254093	277033			
SCO Bike Aspect eRIDE 920 orange	254092	254093	277033			
SCO Bike Aspect eRIDE 930	254092	254093	277033			
SCO Bike Aspect eRIDE 940	254092	254093	277033			
SCO Bike Aspect eRIDE 950	254092	254093	277033			
ADDICT eRIDE						
SCO Bike Addict eRIDE Prem	282745			277031	283346	
SCO Bike Addict eRIDE 10	282745			277031	283346	
SCO Bike Addict eRIDE 20	282745			277031	283346	
CONTESSA MOUNTAIN eRIDE						
SCO Bike Contessa Genius eRIDE 910	254092	254093	277032			266602
SCO Bike Contessa Strike eRIDE 910	254092	254093	277032			266602
SCO Bike Contessa Strike eRIDE 920	254092	254093	277032			266602
SCO Bike Contessa Active eRIDE 910	254092	254093	277033			
SCO Bike Contessa Active eRIDE 920	254092	254093	277033			
SCO Bike Contessa Active eRIDE 930	254092	254093	277033			
CONTESSA ROAD eRIDE						
SCO Bike Contessa Addict eRIDE 10	282745			277031		

Model	Fitted hanger	Alternative hangers	Rear Axle	Front Axle	FD Mount	Chainguide
AXIS eRide						
SCO Bike Axis eRIDE Evo Speed	254092	254093	277032			
SCO Bike Axis eRIDE Evo	254092	254093	277032			
SCO Bike Axis eRIDE 10 Men	254092	254093	277033			
SCO Bike Axis eRIDE 10 Lady	254092	254093	277033			
SCO Bike Axis eRIDE 20 Men	254092	254093	277033			
SCO Bike Axis eRIDE 20 Lady	254092	254093	277033			
SILENCE eRide						
SCO Bike Silence eRIDE Evo Speed	278362			279073		
SCO Bike Silence eRIDE 10 Men Speed	278363		277033			
SCO Bike Silence eRIDE 10 Lady Speed	278363		277033			
SCO Bike Silence eRIDE 20 Men Speed	278363		277033			
SCO Bike Silence eRIDE 20 Lady Speed	278363		277033			
SCO Bike Silence eRIDE 30 Men	278363		277033			
SCO Bike Silence eRIDE 30 Lady	278363		277033			
SUB eRide						
SCO Bike Sub Sport eRIDE 10 Men	273685					
SCO Bike Sub Sport eRIDE 10 Lady	273685					
SCO Bike Sub Sport eRIDE 10 USX	285374					
SCO Bike Sub Sport eRIDE 20 Men	273685					
SCO Bike Sub Sport eRIDE 20 Lady	273685					
SCO Bike Sub Sport eRIDE 20 USX	285374					
SCO Bike Sub Tour eRIDE 10 Men	273685					
SCO Bike Sub Tour eRIDE 10 Lady	273685					
SCO Bike Sub Tour eRIDE 10 USX	285374					
SCO Bike Sub Tour eRIDE 20 Men	273685					
SCO Bike Sub Tour eRIDE 20 Lady	273685					
SCO Bike Sub Tour eRIDE 20 USX	285374					
SCO Bike Sub Tour eRIDE 30 Men	273685					
SCO Bike Sub Tour eRIDE 30 Lady	273685					
SCO Bike Sub Tour eRIDE 30 USX	285374					
SCO Bike Sub Active eRIDE Men	273685					
SCO Bike Sub Active eRIDE Lady	273685					
SCO Bike Sub Active eRIDE USX	285374					

Model	Fitted hanger	Alternative hangers	Rear Axle	Front Axle	FD Mount	Chainguide
SCO Bike Sub Active eRIDE 10 USX rack	206375					
SCO Bike Sub Active eRIDE 20 USX rack	206375					
SCO Bike Sub Active eRIDE 30 USX rack	206375					
SUB CROSS eRide						
SCO Bike Sub Cross eRIDE 10 Men	273685					
SCO Bike Sub Cross eRIDE 10 Lady	273685					
SCO Bike Sub Cross eRIDE 10 USX	285374					
SCO Bike Sub Cross eRIDE 20 Men	273685					
SCO Bike Sub Cross eRIDE 20 Lady	273685					
SCO Bike Sub Cross eRIDE 20 USX	285374					
SCO Bike Sub Cross eRIDE 30 Men	273685					
SCO Bike Sub Cross eRIDE 30 Lady	273685					
SCO Bike Sub Cross eRIDE 30 USX	285374					
JUNIOR eRIDE						
SCO Bike Roxter eRIDE 26	206375					
SCO Bike Roxter eRIDE 24	206375					
SUB EQUIPPED						
SCO Bike Sub Sport 10 Men	206375					
SCO Bike Sub Sport 10 Lady	206375					
SCO Bike Sub Sport 20 Men	206375					
SCO Bike Sub Sport 20 Lady	206375					
SCO Bike Sub Sport 30 Men	206375					
SCO Bike Sub Sport 30 Lady	206375					
SCO Bike Sub Sport 40 Men	206375					
SCO Bike Sub Sport 40 Lady	206375					
SCO Bike Sub Comfort 10 USX	206375					
SCO Bike Sub Comfort 20 Men	206375					
SCO Bike Sub Comfort 20 USX	206375					
SUB CROSS						
SCO Bike Sub Cross 10 Men	206375					
SCO Bike Sub Cross 10 Lady	206375					
SCO Bike Sub Cross 20 Men	206375					
SCO Bike Sub Cross 20 Lady	206375					
SCO Bike Sub Cross 30 Men	206375					
SCO Bike Sub Cross 30 Lady	206375					
SCO Bike Sub Cross 40 Men	206375					
SCO Bike Sub Cross 40 Lady	206375					
SCO Bike Sub Cross 50 Men	206375					
SCO Bike Sub Cross 50 Lady	206375					

Model	Fitted hanger	Alternative hangers	Rear Axle	Front Axle	FD Mount	Chainguide
FUTURE						
SCO Bike Spark 700	254092	254093	277032			
SCO Bike Spark 600	254094		274235			
SCO Bike Ransom 600	286000		285813			
SCO Bike Ransom 400	286000		285813			
SCO Bike Scale 710	206375					
SCO Bike Scale RC 600	233961					
SCO Bike Scale RC 400 Pro	233961					
SCO Bike Scale RC 400	233961					
SCO Bike Scale RC 200	233961					
SCO Bike Gravel 400	266778					
YOUTH						
SCO Bike Scale 26 disc	206375					
SCO Bike Scale 24 rigid	233961					
SCO Bike Scale 24 disc yellow	233961					
SCO Bike Scale 24 disc cobalt blue	233961					
SCO Bike Scale 24	233961					
SCO Bike Scale 20 rigid	233961					
SCO Bike Scale 20 yellow	233961					
SCO Bike Scale 20 cobalt blue	233961					
SCO Bike Roxter 26 disc	206375					
SCO Bike Roxter 26	206375					
SCO Bike Roxter 24 raw alloy	233961					
SCO Bike Roxter 24 teal blue	233961					
SCO Bike Roxter 20 raw alloy	233961					
SCO Bike Roxter 20 teal blue	233961					
SCO Bike Contessa 26 disc	206375					
SCO Bike Contessa 26	206375					
SCO Bike Contessa 24 rigid	233961					
SCO Bike Contessa 24 disc	233961					
SCO Bike Contessa 24	233961					
SCO Bike Contessa 20 rigid	233961					
SCO Bike Contessa 20	233961					

REPLACEABLE DROP OUTS

Item	Product Name	Image	
228845	MY 1995 Vantage 3.0 Pro Only, Dual Pro		
228844	MY 1995 Pro Only Tandem, Vantage 1.0, Vantage 2.0, AFD 903		
228841	MY 1995 Dual Pro		
228837	MY 1996 Vertigo LSD, Vertigo LSD Pro		
228840	MY 1997 all AFD		
228839	MY 1996 Vantage M 15-55, Elite Racing, Team Racing, Elite Racing JR, Comp Racing CST, AFD 606, AFD 906		
228843	Dropout for Waimea/Kailua 97’		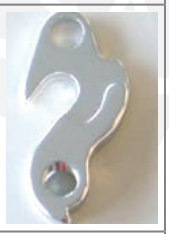
228846	MY 1996 Vertigo LSD DH, Vantage M 15-55, Elite Racing, Team Racing, Elite Racing JR, Dual Pro, Expression, Waimea, Waimea Pro		

Item	Product Name	Image	
228842	Dropout for Comp/ Expert 97’/ Vantage.3.0/ Scale Jr 24’’		
228838	Dropout + screws Urban&Outdoor 2000’ Sonoma		
204648	Dropout Repair set Scale Carbon 05/06		
236414	Dropout SCOTT Scale Carbon 07’-10’		
206375	Dropout+Screw all MTB since 97’		
206376	Dropout+Screw AFD/Speedster since 98’		
206472	Dropout SCOTT Addict 07’-11’/ CR1 10’≥		
206473	Dropout Spark/ Genius’09 Scale’11		

REPLACEABLE DROP OUTS continued

Item	Product Name	Image
213487	Dropout replacement Plasma 2/3	
200520	Dropout IDS QRelease	
202779	Dropout Right IDS std axle	
200521	Dropout IDS 12mm Standard 0mm No axle	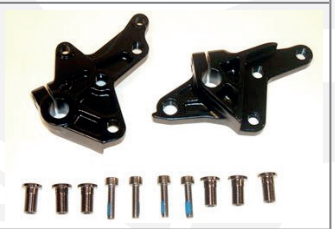
202780	Dropout Right IDS 12mm thr.axle	
206819	Dropout Right IDS for Maxle	
210004	Dropout IDS 12mm Long +10mm No axle	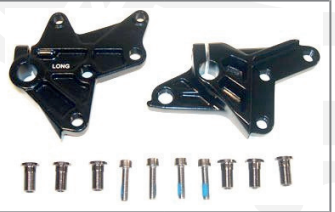
215998	Dropout IDS Single Speed	

Item	Product Name	Image
215999	Dropout IDS 12mm Short -10mm No axle	
219572	Dropout Set IDS 2 135/RWS 5	
219573	Dropout Set IDS 2 135/RWS12 Compatible with 150 x 12	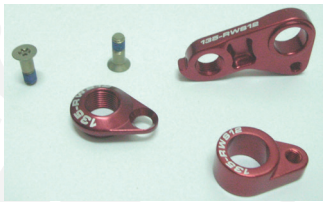
219574	Dropout Set IDS 2 142/RWS12 Compatible with 148 x 12 & 197 x 12	
219575	D.out Hanger right IDS2 135/RWS5	
219576	D.out Hanger.right IDS2 135/RWS12 Compatible with 150 x 12	
219577	Dropout Hanger right IDS 2 142/ RWS12 Compatible with 148 x 12 & 197 x 12	
219583	Dropout Hanger Foil 2011'	

REPLACEABLE DROP OUTS continued

Item	Product Name	Image
229735	Dropout set Gambler 2013'	
233930	Dropout Speedster 10-50 2013'	
233961	Dropout Cont660-650 ScalJr 20-24 2-PAK	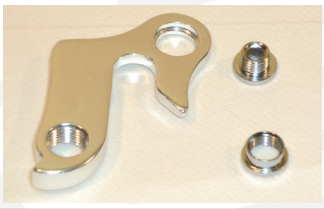
235286	Dropout hanger Addict Solace 2014'	
235287	Dropout Set IDS 2 142/RWS 12 DM Compatible with 148 x 12 & 197 x 12	
235288	D.out hanger right IDS 2 142/ RWS12DM Compatible with 148 x 12 & 197 x 12	
239175	D.out hanger DM Gambler`13/Volt FR '15	
239176	D.pout set nut. axle Std135x10 Volt.FR	

Item	Product Name	Image
239177	Dropout set Thru Axle Voltage FR 2015	
239178	Dropout hanger Plasma 4+5 2015	
239530	Dropout hanger Solace Disc '15<	
242546	Dropout hanger Ø12MM Big Jon	
244755	Dropout hanger Speedster Disc/ CX '16	
219566	FD-Mount Plate Set Genius LT 2011'	
254090	Dropout hanger boost TA12-SW carb (None direct mount.)	
254091	Dropout hang boost TA12-SW DM carb MY17. (Direct mount only)	

REPLACEABLE DROP OUTS continued

Item	Product Name	Image
254093	Dropout hanger boost TA12 DM alloy MY17. (Direct mount only)	
254092	Dropout hanger boost TA12 alloy MY17. (None direct mount)	
254094	Dropout hanger boost Q/R not direct MY17.	
223304	FD-Mount Plate Set Spark 2012’	
229728	FD-Mount Genius 700-650B 2013’	
229729	FD-Mount Genius 900-29 2013’	
235276	FD-Mount plate Set Spark 700 14’	
235277	FD-Mount plate Set Genius LT 700 14’	

Item	Product Name	Image
235278	FD-Mount plate Set Spark 900 14’	
239285	FD mount clamp Big Ed 2015	
245450	FD-Mount clamp Big Jon 2016	
254096	Brake mount Scale/Spark 12/160mm MY17	
254095	Brake mount Scale/Spark 12/180mm MY17	
254097	Brake mount Scale/Spark QR/180mm MY17	
254088	Front derailleur mount Scale MY17. (compatable only with Scale 3 none RC fames)	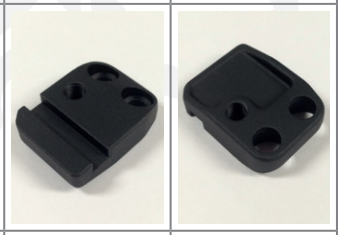
254087	Front derailleur mount Spark MY17 (None RC frames only) Genius MY18 non HMX	

REPLACEABLE DROP OUTS continued

Item	Product Name	Image
254098	Chainguide Scale small 30T-36T MY17 (Scale 3 only)	
254099	Chainguide Scale Large 30T-40T MY17 (Scale 3 only)	
254100	Chainguide set Spark RC MY17 (36T max)	 
254101	Chainguide set Spark MY17 (120mm spark only 36T max)	 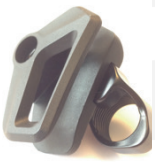
268473	New Chainguide set Genius 700/900 MY18	 
275502	Chain guide Gambler 2020	
275503	Bash guard Gambler 2020	
264483	New DM hanger for Shimano, Foil Addict	 
266778	New Speedster hanger MY18	

Item	Product Name	Image
	New Addict CX/ Gravel FD-mount for new Shimano FD generation, backwards compatible (no new part number)	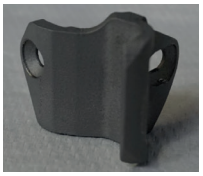
266601	New Chainguide base plate for E-Spark	
266602	New Chainguide base plate for E-Genius	
273417	Dropout 135x5 DM Addict/Foil 19	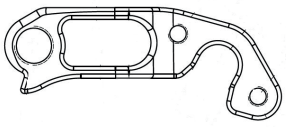
273561	Dropout 141x5 Scale/Aspect 5-pak	
273685	Dropout E-sub men/lady 19	
276482	Dropout and Geo chip Gambler 20	
277544	Dropout Addict RC 20	
277545	Dropout Addict RC direct mount 20	
285813	SCO Axle Rear UDH 12x148mm	

AXLES

Item	Product Name	Image
202781	Voltage 135 mm	
239174	Voltage FR MY15	
202782	Gambler 150 mm x 12 mm	
230237	Gambler MY13 150 mm x 12 mm	
242545	Big John 197 mm x12 mm	
242573	Big John 150 mm x 15 mm	
239286	Bid Ed MY15 QR 5 mm	
242429	171.5 mm x 12 mm BOOST	
242430	197 mm x 12 mm RWS	
242432	150 mm x 12 mm RWS	
236153	142 mm x 12 mm RWS	
242431	100 m x 12 mm RWS MY>16 front road Disc	

Item	Product Name	Image
262629	142 mm x 12 mm RWS Road Disc	
262045	100 mm x 12 mm RWS Road Disc plugin	
239528	142 mm x 12 mm Solace Disc MY15 rear	
239529	100 mm x 15 mm Solace Disc MY15 front	
276481	Axle rear Gambler 20	
277028	Axle front Addict RCPlasma 6 TP 20	
277029	Axle rear Addict RCPlasma 6 TP 20	
277030	Axle rear Addict RCPlasma 6 20	
277031	Axle front Addict RCPlasma 6 20	
277032	SCO Axle RWS rear 148x12 boost plug T30	
277033	SCO Axle RWS rear 148x12 boost plug T25	

NON SAP BB CABLE GUIDES

Item	Product Name	Image
286000	SCO Dropout Sram UDH 21	
282745	SCO eRIDE Mahle Addict Dropout DM 21	

Product Name	Image
SCOTT Scale Plus	
SCOTT CR1	
SCOTT Scale Alloy (not Plus)	
SCOTT Sub Evo, SCOTT Sub Sport, SCOTT Sub Comfort	
SCOTT Speedster (external cables)	
Speedster disc/Metrix/ Speedster gravel	
SCOTT Sub Cross, Aspect (internal cable)	
1st generation Addict	



SCOTT
EST.
1958
TECHNICAL SERVICES

PUMP REPLACEMENT PARTS

Item	Name	Compatible with
SEALS		
231041	Syncros Pump T-Head Seals PACK-10	All Syncros Mini- and Floorpumps with T-Head
237616	Pump-Syncros Auto head seals	234816 Floorpump FP2.0 MY 15/16
238622	Seals Presta/Schraeder Dual Head	238842 Floor pump FP3.0 MY15 250593 Mini-pump Syncros HV1.5 MY17
250605	Seal Presta/Schrader MY17 HV mini pumps	250592 Mini-pump Syncros HV1.0 MY17 250593 Mini-pump Syncros HV1.5 MY17 250594 Mini-pump Syncros 2HV1.0 265587 SYN Mini Pump Boundary 2.0 HV 270234 SYN Mini-Pump Boundary 1.5HV
250606	Seal Presta for MY17 HP mini pumps	250595 Mini-pump Syncros HP1.0 MY17 250596 Mini-pump Syncros HP1.5 MY17
263882	Seal for Auto Head FP2.0 MY17	250598 Floor pump Syncros FP2.0 MY17
270245	Seal Presta for Boundary HP minipump	270235 Mini-pump Boundary 1.5HP 265588/Mini-pump Boundary 2.0HP MY19
COMPLETE HEADS		
231043	Complete Twin Head w/o Hose for FP3.0 MY14	234817 Floor pump FP2.5 MY14
238623	Dual Head with hose FP3.0/FP3.0HV MY15	238842 Floor pump FP3.0 MY15 238611 Floor pump FP3.0 HV MY15
244909	Complete Flip/Flop head+hose FP3.0 MY16	238842 Floor pump FP3.0 MY15/16 238611 Floor pump FP3.0 HV MY15/16
244412	Flip/Flop head FP3.0 MY16	238842 Floor pump FP3.0 MY16 238611 Floor pump FP3.0 HV MY16 265589 SYN Floor Pump Vernon 2.0HV
263881	Complete Auto Head w/hose for FP2.0 2017	250598 Floor pump Syncros FP2.0 MY17
271334	Flip/Flop head MY17 alloy head core	250597 Floorpump FP1.5 MY17
273318	Complete Flip Head w/hose Vernon 2.0Dual Mode	270236 Floorpump Vernon 2.0 Dual Mode MY19

Please kindly note that these parts are intended for service and support but not regular sales.

For all other parts of the Syncros product range please refer to the regular dealer catalog or the webshop.

HUB KITS

Item	Product Name	Image
242438	Hub rep kit Syncros Formula CL14811	
252403	Hub rep kit Form CT-1702 5x141mm	
252404	Hub rep kit Form CT-142 12x142mm	
252405	Hub rep kit Form CL-81115x110mm	
262048	Hub rep kit Syncros Form CL-25CL2611	
262049	Hub rep kit Syncros RP 2.0 Form F+R	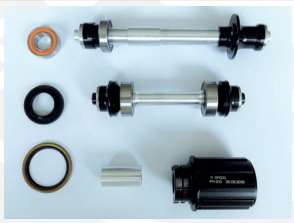
262050	Hub rep kit Syncros RP 2.0 Disc Form F+R	
262051	Hub rep Kit syncros Formula RXC-142	

Item	Product Name	Image
270898	Hub rep kit SY/ Form XR2.5 R XD 18	
270899	Hub rep kit SY/ Form XR2.5 R SHIM 18	
270900	Hub rep kit SY/ Form XR2.0 F CL 18	
270901	Hub rep kit SY/ Form XR2.0 R CL 18	
271246	Hub rep kit SY rep kit Merr 1.0D F19	
271247	Hub rep kit SY rep kit Merr 1.0D R19	
271248	Hub rep kit SY RR/ RP2.0 Merr1.5 F 19	
271249	Hub rep kit SY RR/ RP2.0 Merr1.5 R 19	

Item	Product Name	Image
271252	Hub rep kit SY Silve/Reve 1.0 F 19	
271253	Hub rep kit SY Silvert/Reve 1.0 R 19	
271254	Hub rep kit SY Revelstoke 1.5 XD R19	
271255	Hub rep kit SY Revelstoke 1.5F 19	
271256	Hub rep kit SY Silve/Reve 2.5SH R 19	
271258	Hub rep kit Form ECT-148 R 19	
271259	Hub rep kit From TXC-142A R 19	
271260	Hub rep kit Form TXC-712 F 19	

Item	Product Name	Image
271262	Hub rep kit Form DHL-92 F 19	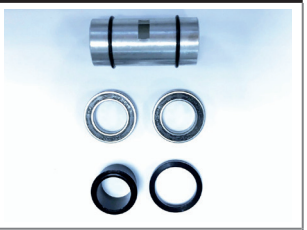
271263	Hub rep kit Form CL2510 F 19	
271264	Hub rep kit Form CL-2641 R 19	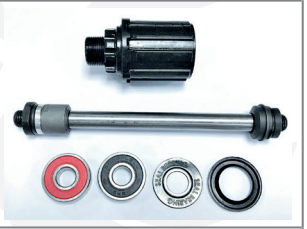
277036	Hub rep kit Form CL-2241 Shim R 20	
278353	Hub rep kit Form SCT-2010 XD R 20	
278354	Hub rep kit Form SCT-2012 MS R 20	
278355	Hub rep kit SY Silve 2.5 MS 6B R 20	
278356	Hub rep kit SY Silve 1.5 MS CL R 20	

Item	Product Name	Image
278357	Hub rep kit SY Silve 1.5 MS 6B R 20	
278870	Hub rep kit SY Rev DH 1.5 6B F 20	
279065	Hub rep kit Form SCT-2102 Shim R 20	
282721	SCO Hub rep kit SCT-2103 F 21	
286722	SCO Hub rep kit DHL-93 F 21	
282719	SCO Hub rep kit SCT-2106 Shim R 21	
282722	SCO Hub rep kit SCT-1426 R XDR 21	
282724	SCO Hub Rep Kit SCT-2108 R Shim 21	
282723	SCO Hub Rep Kit EMSL-148S R M/S 21	
282727	SCO Hub Rep Kit TD-148M R M/S21	
282725	SCO Hub rep kit CL-3248 R Shim 21	
285815	SCO Hub rep kit DC-3248 R SH 21	
282720	SCO Hub rep kit SCT-2105 F 21	
282726	SCO Hub Rep Kit CL-148M R M/S 21	

HUB KIT PARTS

Article no.	Description
268410	SCO Tool hub/gear ring Form 21T MTB
268411	SCO Tool hub/gear ring Form 15T road
268412	SCO Hub rep gear ring Form 21T MTB
268413	SCO Hub rep gear ring Form 15T road

DROPPER SEATPOSTS

⚠The seatpost on the Future Pro bikes have a drop of 80mm, this post has a rider weight limit of 40kg. If the riders weight exceeds this there is a risk of the air cartridge failing, this is not covered by warranty.

If the rider is above the recommended weight a replacement cartridge can be source but this wiil be
chargeable; **278729 - SCO Seatpost-Serv Air cartkit Dunc**

	Part name	Travel	Cartridge	Service kit
MY20/21	Syncros Dropper 2.5	100mm	262073 - SCO Seatpost-Serv.air Cartkit Sync. 2.5	267432 - SCO Seatpost-serv.seal kit 2.5
		120mm		
		125mm		
	Duncan Dropper 2.5	100mm	278396 - SCO Seatpost-Serv Air cartkit Duncan 2.5	278398 - SCO Seatpost-Serv.seal kit Duncan 2.5
		125mm		
		150mm		
		170mm		
	Duncan Dropper 2.0	100mm	278397 - SCO Seatpost-Serv Air cartkit Duncan 2.0	278399 - SCO Seatpost-Serv.seal kit Duncan 2.0
		125mm	278397 - SCO Seatpost-Serv Air cartkit Duncan 2.0	
		150mm	262072 - SCO Seatpost-Serv.air Cartkit Sync. 2.0	
		170mm	278397 - SCO Seatpost-Serv Air cartkit Duncan 2.0	
	Duncan Dropper Future pro 40KG rider weight	FP80mm	278730 - SCO Seatpost-Serv Air cartkit Dunc 40kg	267432 - SCO Seatpost-serv.seal kit 2.5
	Duncan Dropper	80mm for adults	278729 - SCO Seatpost-Serv Air cartkit Duncan	
		100mm		
		120mm		
		130mm		

SYNCROS SPARE PARTS MY21

ITEM	DESCRIPTION RIMS/SPOKES
282757-0001716	SCO Rim Cross X-17 D 32H 21 black 700C
282758-9999716	SCO Rim SY/Alex Race 24 V 24H 21 no color 700C
282759-9999716	SCO Rim SY/Alex Race 24 V 28H 21 no color 700C
282760-9999193	SCO Rim SY/Alex DP-30 21 no color 24"
282760-9999194	SCO Rim SY/Alex DP-30 21 no color 26"
283350-0001716	SCO Rim SY Capital 1.0 X40e 24H 21 black 700C
283351-0001716	SCO Rim SY Capital 1.0 X40e 32H 21 black 700C
283352-0001716	SCO Rim SY Capital 2.0 X25e 28H 21 black 700C
283353-0001716	SCO Rim SY Capital 2.0 X25e 32H 21 black 700C
285925-0001193	SCO Rim Alex C-1000 32H 24" 21 black 24"
283342-9999222	SCO Spoke SY/Form rep kit Cap X40e R no color 1size
283343-9999222	SCO Spoke SY/Form rep kit Cap X40e F no color 1size
283344-9999222	SCO Spoke SY/Form rep kit Cap X25e R no color 1size
283345-9999222	SCO Spoke SY/Form rep kit Cap X25e F no color 1size
ITEM	**DESCRIPTION HUB**
282719-9999222	SCO Hub rep kit SCT-2106 Shim R 21 no color 1size
282720-9999222	SCO Hub rep kit SCT-2105 F 21 no color 1size
282721-9999222	SCO Hub rep kit SCT-2103 F 21 no color 1size
282722-9999222	SCO Hub rep kit SCT-1426 R XDR 21 no color 1size
282723-9999222	SCO Hub rep kit EMSL-148S R M/S 21 no color 1size
282724-9999222	SCO Hub rep kit SCT-2108 R Shim 21 no color 1size
282725-9999222	SCO Hub rep kit CL-3248 R Shim 21 no color 1size
282726-9999222	SCO Hub rep kit CL-148M R M/S 21 no color 1size
282727-9999222	SCO Hub rep kit TD-148M R M/S 21 no color 1size
282736-9999222	SCO eRIDE Mahle Addict hub nut kit 21 no color 1size
282741-9999222	SCO eRIDE Mahle Addict freehub 21 no color 1size
282744-9999222	SCO eRIDE Mahle Tool hub spanner kit 21 no color 1size
285815-9999222	SCO Hub rep kit DC-3248 R SH 21 no color 1size
286722-9999222	SCO Hub rep kit DHL-93 F 21 no color 1size
283340-9999222	SCO Axle Foil/Addict/Speedster D R 21 no color 1size
283341-9999222	SCO Axle Foil/Addict/Speedster D F 21 no color 1size
285813-0001222	SCO Axle Rear UDH 12x148mm 21 black 1size
ITEM	**DESCRIPTION WHEELS**
280296-0001714	SYN Wheelset Revelstoke 1.5 black 27.5"
280296-0001715	SYN Wheelset Revelstoke 1.5 black 29"
ITEM	**DESCRIPTION DROPPER SEAT-POST**
283359-9999222	SCO Seatpost Remote Syncros I-Spec 2 21 no color 1size
ITEM	**DESCRIPTION STEMS**
282761-9999222	SCO Stem spacer kit Crest IC Foil 1" 21 no color 1size
283357-9999222	SCO Stem steerer cap Crest IC Foil 1" 21 no color 1size
285822-0001368	SCO eRIDE Stem Silence 21 Wty black 90mm
285822-0001380	SCO eRIDE Stem Silence 21 Wty black 60mm
285822-0001962	SCO eRIDE Stem Silence 21 Wty black 95mm

BIKE HELMETS

SPARE PARTS - VISO

281343	Visor Stego >21	Granite BLK MarbleBrown Snow White Florida Red Land Green Nitro Purple	6922 6923 6921 6909 6924 6919	S-M-L	
281344	Visor Stego w mount >21	black	0001	S-M-L	
281345	Visor Screw Stego >21	black	0001	one size	
230083	Visor SCOTT Mythic / Stego	black	0001	S-M-L	
238540	Visor SCOTT Vivo	black	0001	S-M-L	
242094	Visor SCOTT Supra	black	0001	one size	
281346	Peak Urban	black	0001	one size	

SPARE PARTS - VISORS continued

238541	Visor SCOTT Arx MTB	black	0001	S-M-L	
		white	0002	S-M-L	
252800	Visor Fuga PLUS	black	0001	S-M-L	
		white	0002	S-M-L	
265997	Visor Nero PLUS	black	0001	one size	
276500	SCO Visor Arx >20	black	0001	S-M-L	
276501	SCO Visor Groove Plus >20	black	0001	S/M-M/L	

PADDING

212871	Inner Pads Spare Kit Groove	grey	0011	one size	
270948	Inner Pads Spare Kit Spunto Junior (New design)	black	0001	one size	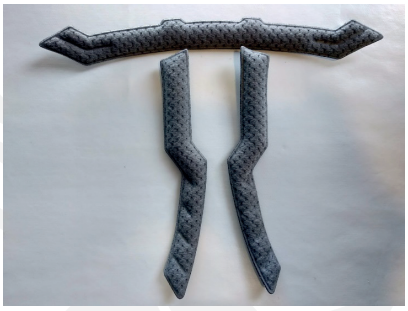
270949	SCO Inner Pads Spare Kit Spunto Kid (New design)	black	0001	one size	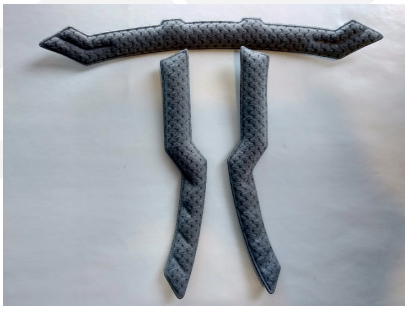
230086	Inner Pads Spare Kit SCOTT Vanish evo / Vanish 2 Note: Pad kit is also compatible with 1st Generation Vanish helmet	black	0001	one size	
238543	Inner Pads Spare Kit SCOTT Stego	black	0001	S, M/L	
238544	Inner Pads Spare Kit SCOTT Vivo	grey	0011	S-M-L	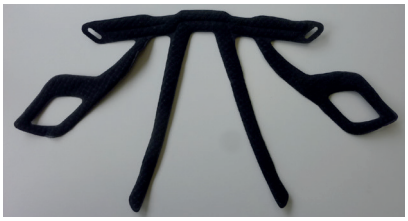
238545	Inner Pads Spare Kit SCOTT Vivo PLUS	black	0001	S-M-L	

PADDING continued

242095	Inner Pads Spare Kit SCOTT Supra PLUS	black	0001	one size	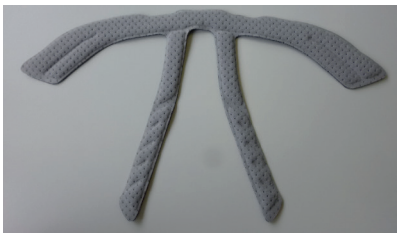
252801	Inner Pads Spare Kit Supra	black	0001	one size	
230608	Inner Pads Spare Kit SCOTT Jibe	black	0001	S-M-L	
230088	Inner Pads Spare Kit SCOTT Split	grey	0011	one size	
235704	Inner Pads Spare Kit Arx (CO)	grey	0011	S-M-L	
238546	Inner Pads Spare Kit Arx Plus	black	0001	S-M-L	
240416	Inner Pads Spare Kit Chomp Thin	red	0004	one size	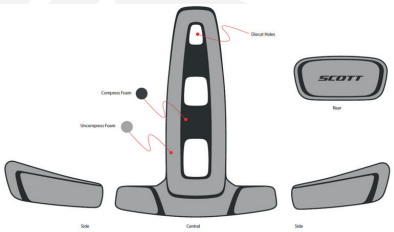
252802	Inner Pads Spare Kit Fuga Plus	black	0001	S/M, L	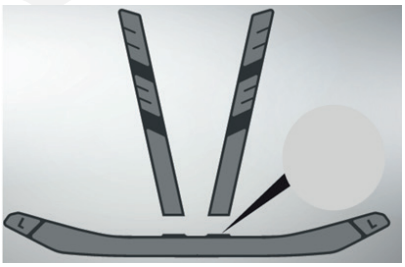

PADDING continued

271367	Inner Pads Spare Kit Caden/ Centr Rev	black	0001	S-M-L	
265998	Inner Pads Spare Kit Groove Plus	black	0001	S/M, M/L	
265999	Inner Pads Spare Kit Nero Plus	black	0001	XS-S-M-L-XL	
276503	SCO Inner Pads Spare Kit Split Plus >20	black	0001	one size	
276504	SCO Inner Pads Spare Kit Arx Plus >20	black	0001	S-M-L	
276505	SCO Inner Pads Spare Kit Arx >20	black	0001	S-M-L	

OTHER SPARE PARTS

276508	SCO Inner Pads Spare Kit Jibe >20	black	0001	S/M, M/L	
281347	Inner Pad Spare Kit Centr >21 w Mips	black	0001	S-M-L	
281348	Inner Pads Spare Kit Stego >21	black	0001	S-M-L	
276506	Inner Pads Spare Kit II Doppio Plus	black	0001	one size	
276507	Inner Pads Spare Kit Ristret/ Doppio	black	0001	one size	

OTHER SPARE PARTS continued

234588	LW Fit System Kit	black	0001	one size	
242097	V-RAS Spare Kit <16	black	0001	one size	
252807	Cadence Aero Plugs	black	0001	S, M, L	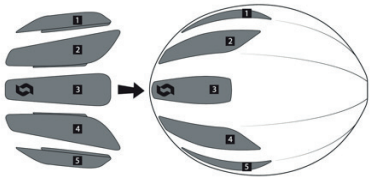
276509	SCO Split Aero Plug	black	0001	one size	
276510	SCO Cadence Aero Plugs reflective	grey	11	S-M-L	
278254	SCO Rear Light Unit Spunto Junior/Kid	black	1	one size	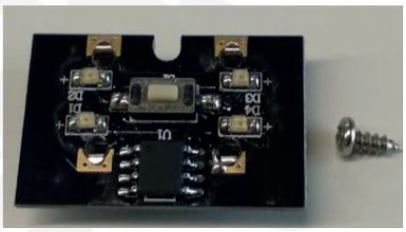
270753	JRAS Fit System Wheel	black	0001	one size	
276511	Rear Light Set IL Doppio/Plus	black	0001	S, M, L	

223735	Goggle Retainer SCOTT Jibe	black	0001	one size	
252806	HALO 360 Spare Kit	black	0001	one size	
252805	HALO 270 Spare Kit	black	0001	one size	
252804	MRAS 17 Spare Kit	black	0001	one size	
238942	M-RAS System Kit <15	black/white	1007	one size	
246391	M-RAS Solo	black	0001	one size	
242096	RAS Spare Kit <16	black	0001	one size	
281349	HALO 270 w Rubber Wheel Spare Kit	black	0001	one size	

FIT SYSTEMS CHART

FIT SYSTEM NAME	252806 HALO 360	252805 HALO 270	252804 MRAS 17	238942 M-RAS <15	246391 MRAS SOLO	242096 RAS <16	234588 LW FIT SYSTEM	281349 HALO 270	MIPS LAYERED WITH MAS	JRAS FIT SYSTEM WHEEL
CADENCE PLUS	✓									
CENTRIC PLUS 21								✓		
CENTRIC PLUS	✓									
ARX PLUS			✓							
ARX			✓							
FUGA PLUS		✓								
ARX MTB PLUS			✓							
ARX MTB			✓							
STEGO 21									✓	
STEGO			✓							
VIVO PLUS			✓							
VIVO			✓							
SUPRA PLUS					✓					
SUPRA					✓					
SPUNTO						✓				✓
IL DOPPIO PLUS	NO REPLACEMENT FIT SYSTEM									
IL DOPPIO										
RISTRETTO										
CHOMP 2										
FUGA				✓						
GROOVE PLUS			✓							
NERO PLUS	NO REPLACEMENT FIT SYSTEM									
SPUNTO JUNIOR										
SPUNTO KID										
SPLIT PLUS 2020			✓							
ARX PLUS 2020			✓							
ARX 2020			✓							
SUPRA ROAD 2020					✓					

BIKE SHOES

CLEAT COVER KIT

Cleat Cover Trail-2018 Crus-r 36-39	**271377**	**Black**	
Cleat Cover Trail-2018 Crus-r 40-48	**271378**	**Black**	
Cleat Cover Trail from 2019 36-39	**271379**	**Black**	
Cleat Cover Trail from 2019 40-48	**271380**	**Black**	

STUD REPLACEMENT PARTS

	279495	**Black or Silver**	

SHOE REPLACEMENT PARTS

Buckle	**279494**	**Black Silver Only**	
Innersole insert and wedge	**220922**		
Strap for Team shoes	**217226**	**Black and white**	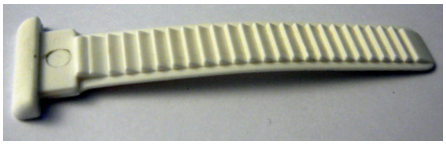

2007–2009				
Boa Reel and Lace replacement kits for shoes 2007–2009	**220702**	**Black** **1 size**		
FROM 2010				
Boa reel & lace replacement kits for shoes from 2010	**220703**	**Black** **1 size**		
	220703	**White** **1 size**		
FROM 2014				
Boa Reel and Lace replacement kits L5 for Road & MTB from 2014	**236210**	**Black** **1 size**		
	236211	**White** **1 size**		

FROM 2015

Boa Reel & Lace replacement kit IP1 Left and Right for Road & MTB shoes from 2015	**240274**	**Black** **1 size**		
	240275	**Bright yellow** **1 size**		
	240275	**Teal blue** **1 size**		
	240275	**White** **1 size**		

FROM 2017

Boa Lace system I6 replacement parts kit for shoes from the season 2017	**268896**	**Black** **1 size**		
		White **1 size**		

FROM 2020

Boa Lace system Li2 EYESTAY +CS1 replacement parts kit for shoes from the season 2020	**286652**	**Black** **1 size**		
		Yellow **1 size**		

BATTERY STORAGE, TRANSPORT & SAFETY

PLEASE MAKE SURE YOU EDUCATE YOURSELF AND THE CUSTOMER ON SAFE BATTERY PRACTICE.

THIS WILL BE DIFFERENT FOR END CONSUMERS AND COMMERCIAL DEALERS.

The end consumer must be made aware of:

- How to look after and recognise any issue with his or her battery
- The correct way to store the battery
- What to do if any damage occurs to the battery
- How to transport the battery

BATTERY STORAGE, SAFETY AND TRANSPORTATION

MAIN SAFETY POINTS TO REMEMBER:

- Never leave the battery in direct sunlight at high temperatures for long period of time; this includes shop windows and leaving in the car.
- Extremes of temperature, hot or cold will have an effect on the life of the battery, protect against these parameters.
- Do not transport the battery on the bike if on a vehicle bike rack, this goes for the complete e-bike system. Water pressure from rain circulating behind a car whilst the e-bike is on a rack can easily exceed any pressure washer. (**do not pressure wash an e-bike system**) If you need to transport this way make sure the drive system is protected/covered completely.
- If you notice any damage to the battery, assess and inform your e-bike battery supplier. **Do not try to fix the problem, remove the casing or cover with protective tape**.
- Always remove the battery from the e-bike before doing any work on it.
- Store the battery in a well ventilated cool area away from any flammable items, acids and flammable liquids
- **Double check your insurance covers you for the storage of Lithium-ion batteries**.
- Install smoke alarms.
- Protect the battery from accidental impact, water and excessive humidity.
- Find a good storage solution (information on a storage solution is later in this chapter)

If you think your battery is damaged or the battery becomes hot, starts to emit smoke or odors you must not try to transport the battery in any way. Immerse in water completely, continue to add water, contact the Fire Service.

Alternative for all commercial businesses you should make sure you have a sand box big enough to easily cover the battery in sand (below) to remove the oxygen supply from the battery. Inform the Fire Service.



The following ADR information will help to educate you on how to transport separate batteries for Commercial Businesses. (Some tunnels in Europe even have restrictions on the number of batteries allowed for commercial business).

Batteries transported connected/installed in the bike are not classed as dangerous goods, but having precautions in place for a large number of bikes is prudent and good practice.

Private transport of batteries is different from Commercial transport, no ADR requirements needed for Private Transport. Commercial transport includes events and inter-company transport in a business vehicle or similar.

TRANSPORT OF HAZARDOUS MATERIALS ACCORDING TO ADR

Those participating in the transport according to ADR

- Packager
- Loader
- Carrier
- Driver
- Unloader
- Recipient

- All persons involved in the transport must be trained in accordance with Chapter 1.3 ADR in relationship to their work and area of responsibility.
- Training must be provided before relevant duties are assumed; otherwise supervision by already trained personnel is required.
- Written records of the training must be maintained and submitted to the authorities in charge upon their request.
- Compliance is strictly enforced by commercial regulatory authorities. Severe fines are imposed for violations.

ADR transport document

- Document must be handed over to the carrier or the driver.
- No formal requirement, but clear rules for obligatory content:
  - Complete address of the sender and recipient
  - Complete and correct description of the content in the exact order specified

IMPORTANT

A copy of the transport document must always be saved on file for 3 months!

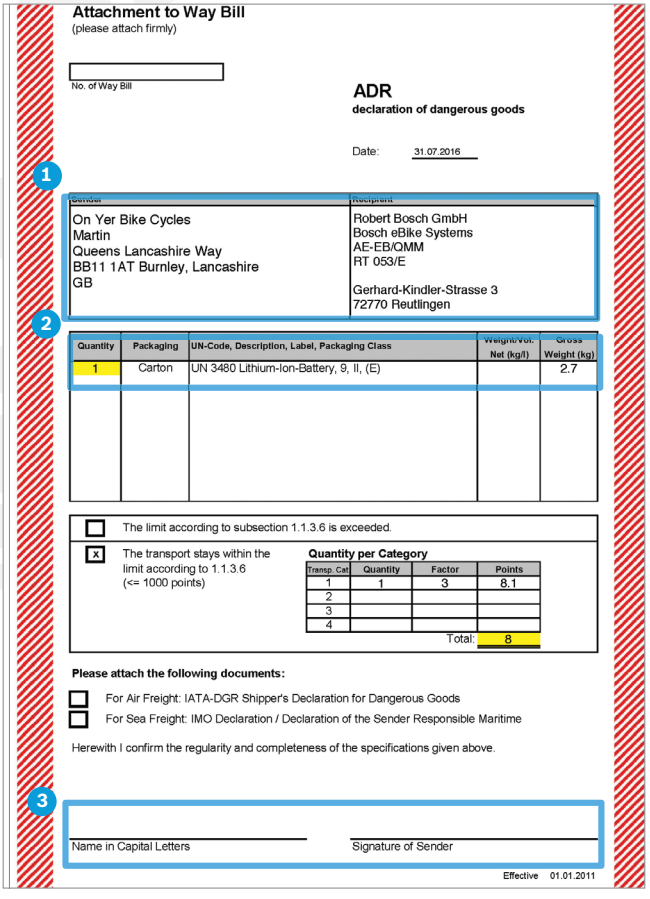

Attachment to Way Bill
(please attach firmly)

No. of Way Bill

ADR
declaration of dangerous goods

Date: 31.07.2016

1

Sender	Recipient
On Yer Bike Cycles Martin Queens Lancashire Way BB11 1AT Burnley, Lancashire GB	Robert Bosch GmbH Bosch eBike Systems AE-EB/QMM RT 053/E Gerhard-Kindler-Strasse 3 72770 Reutlingen

2

Quantity	Packaging	UN-Code, Description, Label, Packaging Class	Weight/Vol. Net (kg/l)	Gross Weight (kg)
1	Carton	UN 3480 Lithium-Ion-Battery, 9, II, (E)		2.7

☐ The limit according to subsection 1.1.3.6 is exceeded.

☒ The transport stays within the limit according to 1.1.3.6 (<= 1000 points)

Quantity per Category

Transp. Cat	Quantity	Factor	Points
1	1	3	8.1
2			
3			
4			
		Total:	8

Please attach the following documents:

☐ For Air Freight: IATA-DGR Shipper's Declaration for Dangerous Goods
☐ For Sea Freight: IMO Declaration / Declaration of the Sender Responsible Maritime

Herewith I confirm the regularity and completeness of the specifications given above.

3

Name in Capital Letters

Signature of Sender

Effective 01.01.2011

Obligations on the loader according to Chapter 7.5 ADR

- Handover of the transport document to the vehicle driver (must be carried throughout the entire transport)
- Inspection of the transport vehicle before loading:
  - Vehicle appears to be in good condition and clean
  - Sufficient load securing equipment (no movement of the goods being shipped possible)
  - Minimum of 2-kg ABC fire extinguishers available which are sealed with current test date and easily accessible
- Loading not permitted if there are deficiencies!

⚠ IMPORTANT

No smoking during loading!

Packaging of lithium-ion batteries as dangerous goods

- Classification: Lithium ion batteries with more than 100 Wh
- Class 9: Miscellaneous dangerous substances and objects
- Dangerous goods description: Lithium ion batteries
- UN number 3480 (internationally valid)
- Mandatory hazard label for shipment as shown in the following example

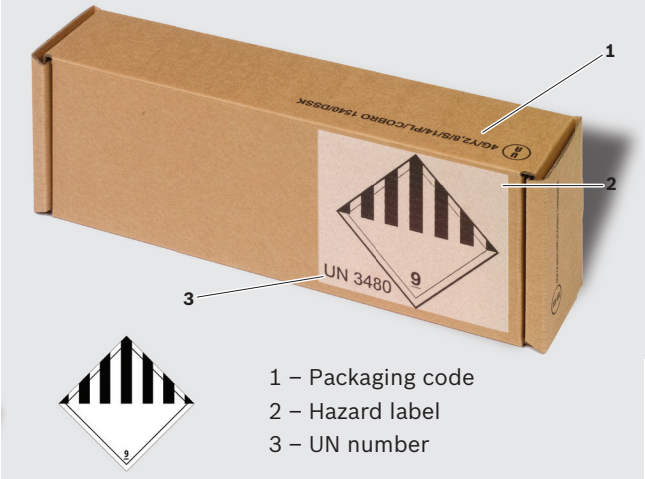

1 – Packaging code
2 – Hazard label
3 – UN number

Obligatory guidelines for packaging

- Shipping only in type-approved packaging with correct labelling
  - Undamaged used packaging can be used again.
- Protect against damage
- No room to move, if required, surrounded by cushioning material that is non-combustible and non-conductive
- Observe the max. gross weight per package (2.8 kg for packaging)
- Recessed battery terminals and protected against short circuiting

Shipping of multiple batteries if batteries are to be shipped with other goods (e.g. drive unit)

- One dangerous goods box per battery.
- Prevent the batteries from damaging each other (content must remain intact when dropped from a height of 1.2 m).
- Outer packaging must be sufficiently stable and undamaged.
- Outer packaging must be marked with the letters “outer box” and labelled with hazard label and UN number.

⚠ IMPORTANT

The correct outer packaging informs persons involved in the transport and enables them to take immediate and proper action in case of an emergency.

⚠ IMPORTANT

Not all package couriers will transport hazardous materials! Please check beforehand with your courier.

in case of questions our trained and authorized colleagues of DC Aubange may help and give you advise, but they cannot issue or sign the documents for you.

jean-francois.thiry@scott-sports.be (director)

julie.wagner@scott-sports.be

isabelle.neri@scott-sports.be

pascal.lamer@scott-sports.be (dispatching)

Your local forwarder should also have in-house DGD specialists being able to assist you.

Shipment per post mail : the regulations can vary from one country to the other, so you have to inquire locally

Shipment per courier (Fedex, UPS, etc) : is subject to special authorizations, so it’s better to ask your local provider.

Downloads of laws and regulations regarding transport of eBike batteries.

- European convention on the international transport of dangerous goods by road (ADR):
  www.bmvi.de
  Transport and Mobility ➔ Transport Policy ➔ Freight Transport and Logistics ➔ Dangerous Goods ➔ Dangerous Goods - Laws/Regulations ➔ Road
- ADR – English Version: www.unece.org
  Our work ➔ Transport ➔ Areas of Work ➔ Dangerous Goods

LEGAL

PRODUCT LIABILITY PROCEDURE CHECKLIST

All written information should be provided in its **original language**. If the information is in a language other than English, German or French, please also **translate** it into one of these three languages for faster processing.

ONLY with the explicit prior permission of SCOTT should you send the evidence back to the claimant. **Please NEVER THROW IT AWAY!**

Please provide:

1. The claimant's **address and phone number**.
2. The **proof of purchase** / sales slip.
3. A **memo** with the following information:
   - **What** happened and **who** was involved?
   - **When**, **where** and **why** did the incident happen?
   - What is the general **appearance** of the product?
   - **Detailed product information**, e.g. frame number, model, etc.
4. Confirmation of the product's periodical **maintenance and service history**.
5. A short **summary of how the product has been used** since it was purchased.
6. The **complete written correspondence** of the claimant, particularly medical certificates, technical expertise, etc.
7. **SHARP, GOOD QUALITY photos** of the defective product from all sides showing the defects as clearly as possible;

   OR

   If the claimant does NOT provide the defective product for examination, then provide the name and address of the location where the product may be examined by us.
8. Careful **storage of ALL pieces of evidence**, particularly the defective piece.

ALWAYS REMEMBER:

1. **NEVER make comments or statements** concerning the **reason** for the **product failure** to the claimant or the dealer!
2. **ALWAYS behave in a customer-friendly manner** with the claimant!
   (active listening, sympathy and concern, etc.)
3. **ONLY SCOTT Headquarters will handle communication** with consumers / lawyers / insurance companies!

PROCEDURE IN PRODUCT LIABILITY CASES

PRODUCT LIABILITY

Definition:

- Product defect (a product is defective in this meaning if it is not as safe as it can be generally expected at the moment of the first placing on the market, e.g. a fault in construction, a fault in production, etc.);
- Bodily injury of the consumer caused by the product defect; and/or
- Property damage of things other than the defective product.

Procedure:

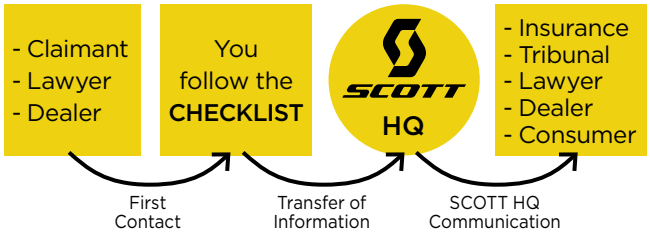

SCOTT Headquarters SOLELY handles product liability cases.

Therefore, please follow this **checklist**.

If you do not follow this checklist, SCOTT may be sued and may not be able to adequately defend its position. This may result in unjustified prejudices that may have detrimental consequences both for SCOTT's trademark image and your business relationship with SCOTT.

SEND ALL INFORMATION TO:

Dominic Elsaesser
Phone: +41 26 460 16 80
Fax: +41 26 460 16 00
Email: eu.legal@scott-sports.com

CUSTOMER COMMUNICATION ON SOCIAL MEDIA

BASIC PRINCIPLES

1. Always stay positive

- Deal with all customer complaints offline = email, phone, face to face
- Avoid customer service online by all means
- Don't post any opinions
- Don't engage in negative discussions at all
- Keep answers clear and short

2. Always pause and think before posting

- Always think twice before hitting 'send'; consider what could happen when you publish information. When in doubt, do not post!
- Double check content, tone, and grammar

GOLDEN RULES

1. Use Common Sense

- Talk to your readers like you would talk to real people in professional situations.
- Be respectful but casual.
- Don't engage in a customer service discussion online.
- Let negative or aggressive posts stand and monitor.

2. Protect SCOTT Sports and yourself.

- Anything said can be picked up by fans, competitors, stakeholders, analysts, hackers, and the media. There are people looking for such information 24/7.
- Respect confidentiality, never post internal or classified information.
- Never post anyone's personal details without consent (not even a name).

3. Take Responsibility

- Be responsible for what you write. Posting on the page means that you represent the SCOTT company.
- Everything you say as an employee is accessible and searchable – even if you delete it afterwards.
- Tell the truth. If you make an error, be up front and honest about your mistake.
- Your honesty or dishonesty will be noticed quickly.

HOW TO REPLY

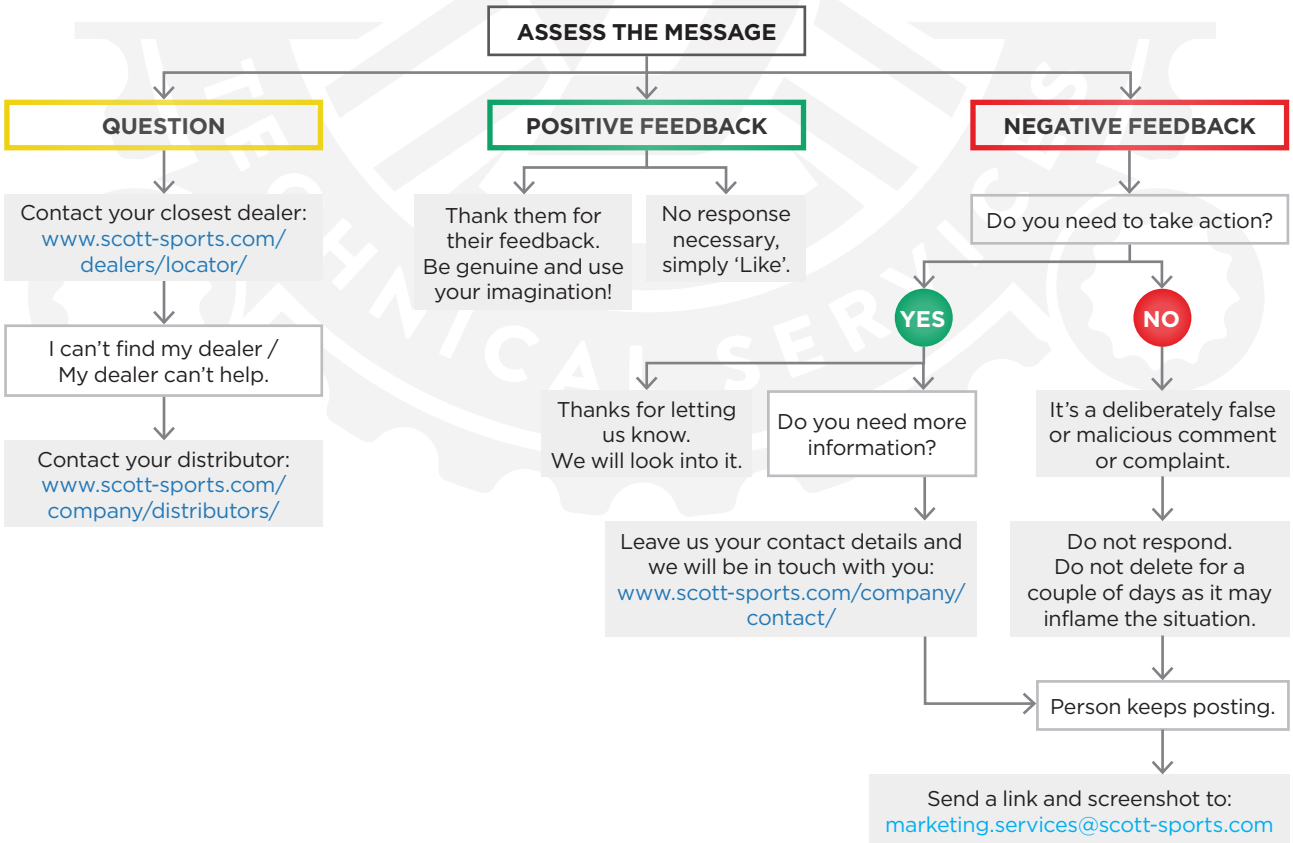

All rights reserved ©2020 SCOTT Sports SA

PHOTOGRAPHY
Product Photos: Fred Leiser | Etiennne Perrenoud | BL Vision
Style Photos: Gaudenz Danuser | Maxence Texier | Kifcat
Action Photos: Gaudenz Danuser | Jochen Haar | Dave Trumpore | Sven Martin | Simon Ricklin | Kristof Ramon | James Mitchell | Brazo de Hierro | Etienne van Rensburg | Markus Greber | Andreas Vigl | Moritz Ablinger | Korupt Vision
Freepik | Photogenia | Vectorpocket

The information contained in this techbook is in various languages but only the English version will be relevant in case of conflict.
Although SCOTT Sports SA has published all information contained in this techbook after careful examination, SCOTT Sports SA assumes no liability for being up-to-date, correct, reliable or complete. SCOTT Sports SA reserves the right to change the content of this techbook, particularly colors, materials and specifications, at any time without prior notice. Any liability shall be exempted.
Products shown may not be available in all regions, please check with your local SCOTT retailer for availability.

EDITOR
SCOTT SPORTS SA
Route du Crochet 11
1762 Givisiez
Switzerland

Authorized Representative: Beat Zaugg, Pascal Ducrot

Tel: +41 (0)26 460 16 16
Fax: +41 (0)26 460 16 00
webmaster.marketing@scott-sports.com
www.scott-sports.com

Commercial register: Fribourg
Register number: CH-217-0135214-3
VAT-ID: CH466324